## 采样电路

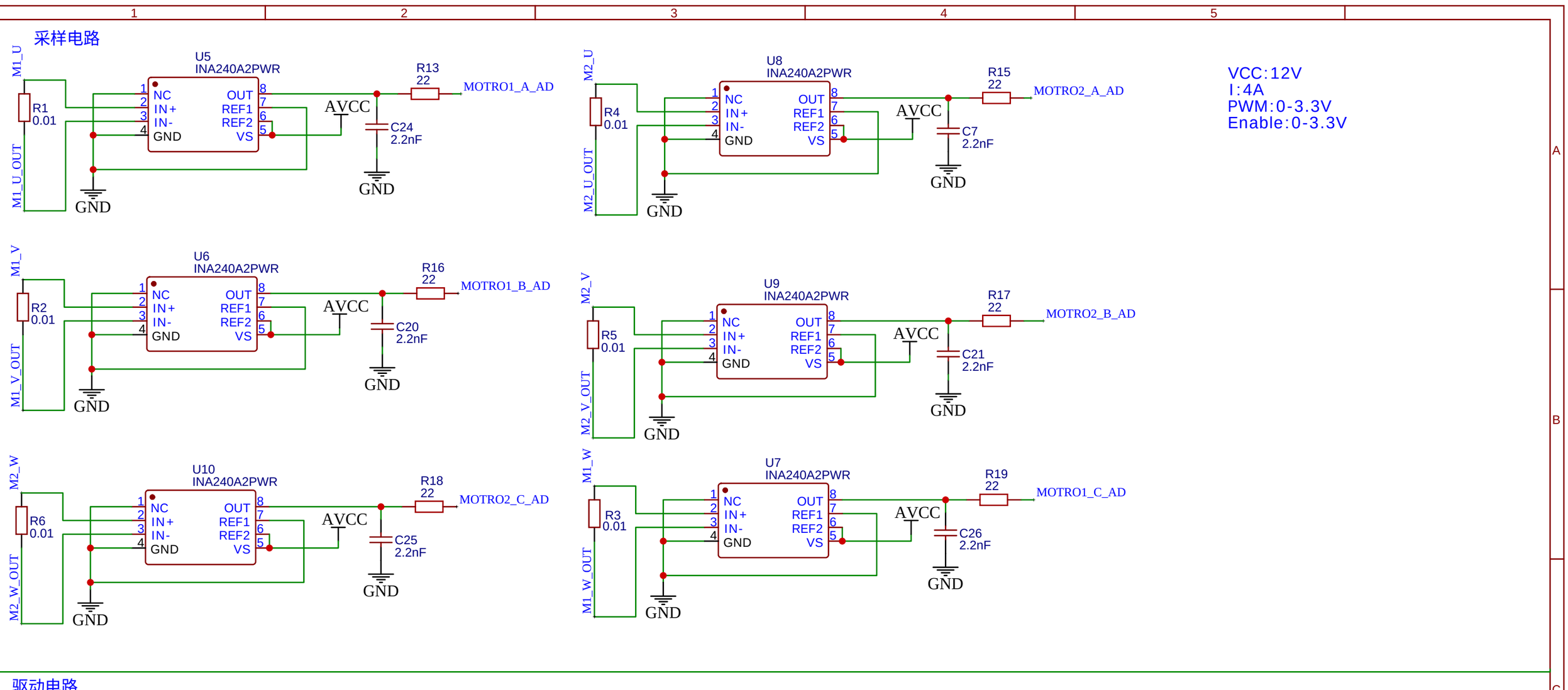


## 驱动电路

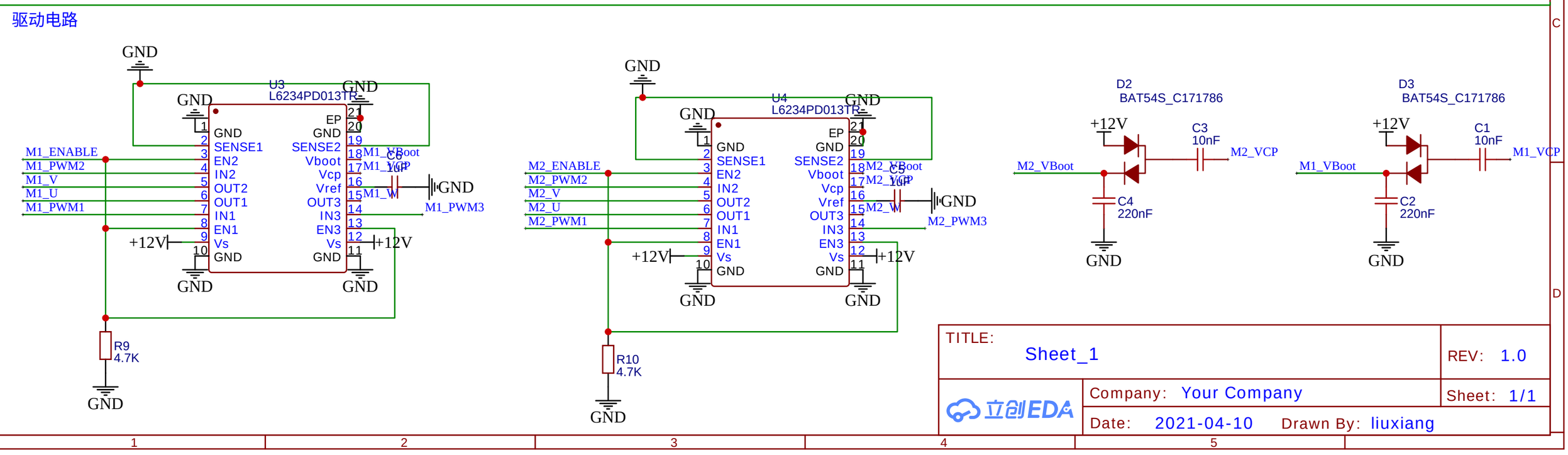


| | |
|---|---|
| TITLE: Sheet_1 | REV: 1.0 |
| 立创EDA Company: Your Company | Sheet: 1/1 |
| Date: 2021-04-10 Drawn By: liuxiang | |

## 下板对上板接口电路

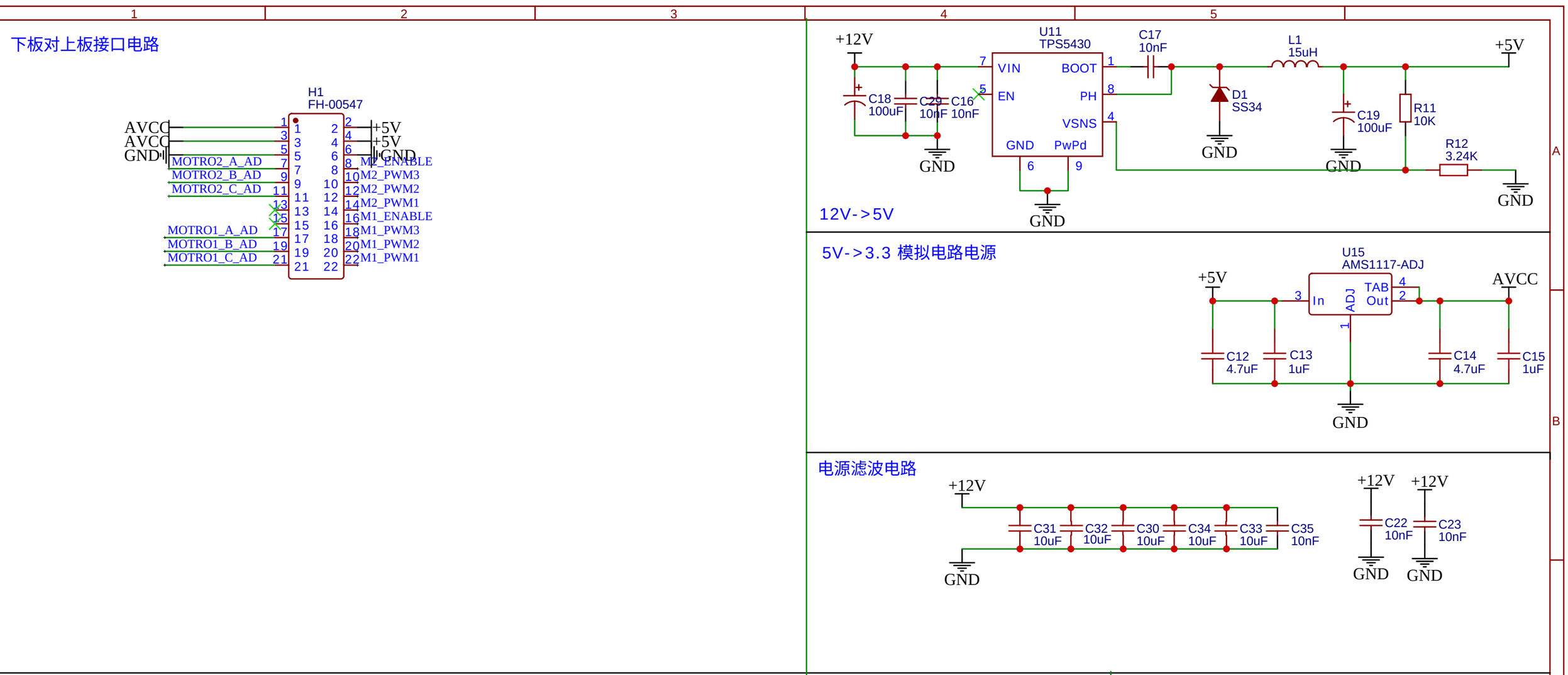


## 电机接线端子

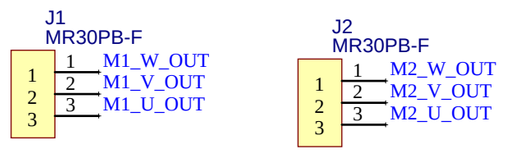


## 电源输入端子

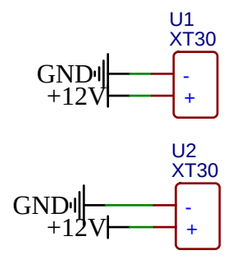


## LED

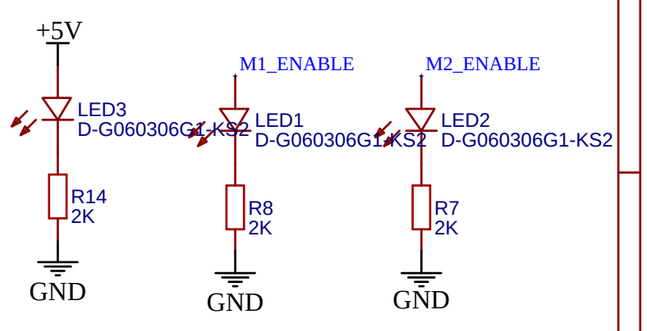


| | |
|---|---|
| TITLE: Sheet_1 | REV: 1.0 |
| 立创EDA Company: Your Company | Sheet: 1/1 |
| Date: 2021-04-10 Drawn By: liuxiang | |