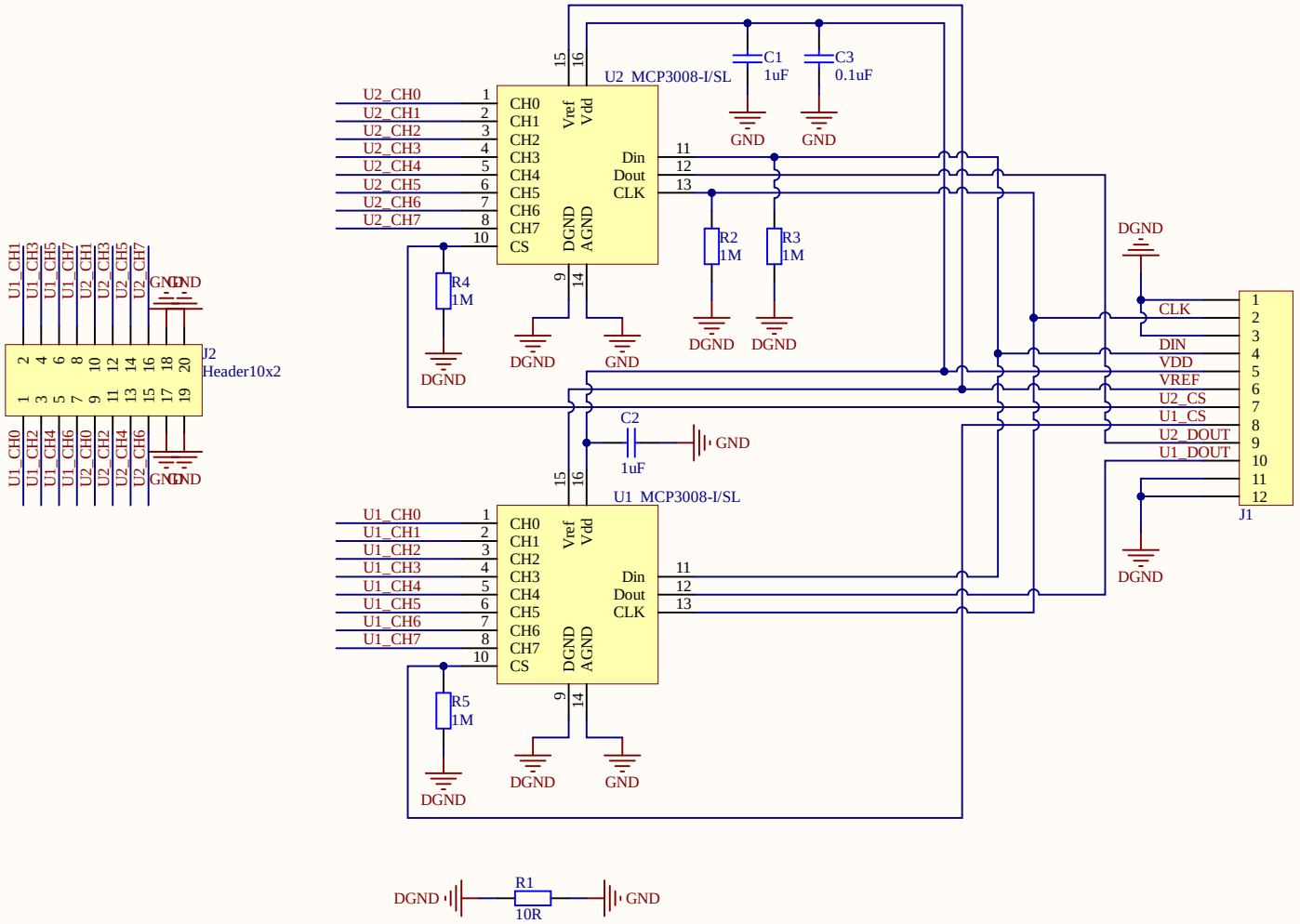

Title			Altium Limited L3, 12a Rodborough Rd Frenchs Forest NSW Australia 2086
Size: A4	Number:	Revision:	
Date: 2025/1/23	Time: 14:06:49	Sheet of	
File: E:\PCB设计\2406\tb397106104\STM32_FYP_ADC_Module\STM32_FYP_ADC_Module.SchDoc			

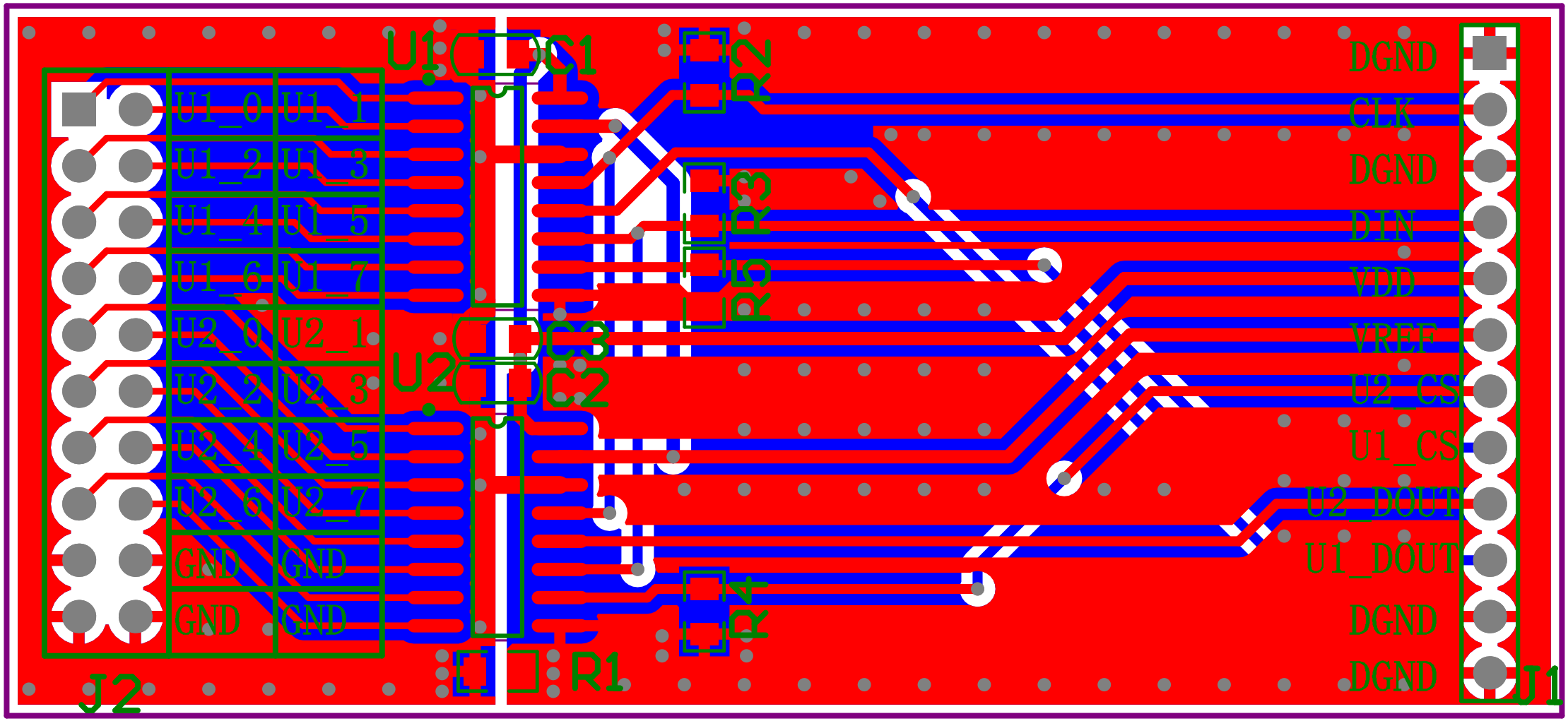
U1
C1
R2
R3
R5
C3
U2
C2
R4
R1
J2
U1_0
U1_1
U1_2
U1_3
U1_4
U1_5
U1_6
U1_7
U2_0
U2_1
U2_2
U2_3
U2_4
U2_5
U2_6
U2_7
GND
GND
GND
GND
J1
DGND
CLK
DGND
DIN
VDD
VREF
U2_CS
U1_CS
U2_DOUT
U1_DOUT
DGND
DGND