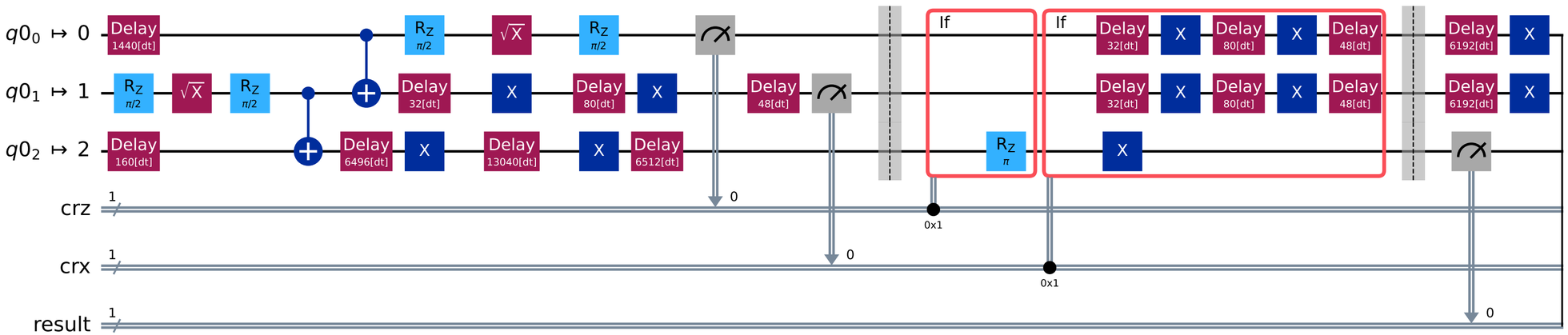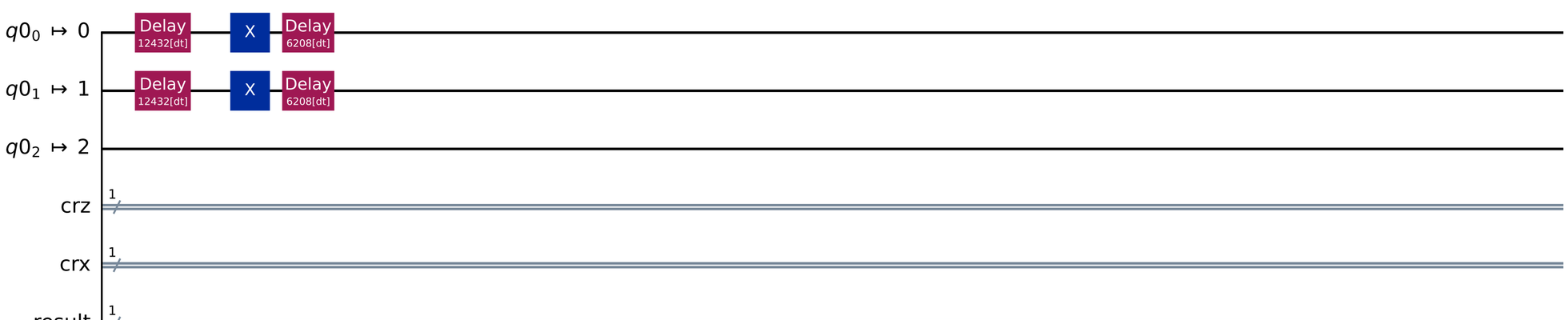Global Phase: $\pi/2$