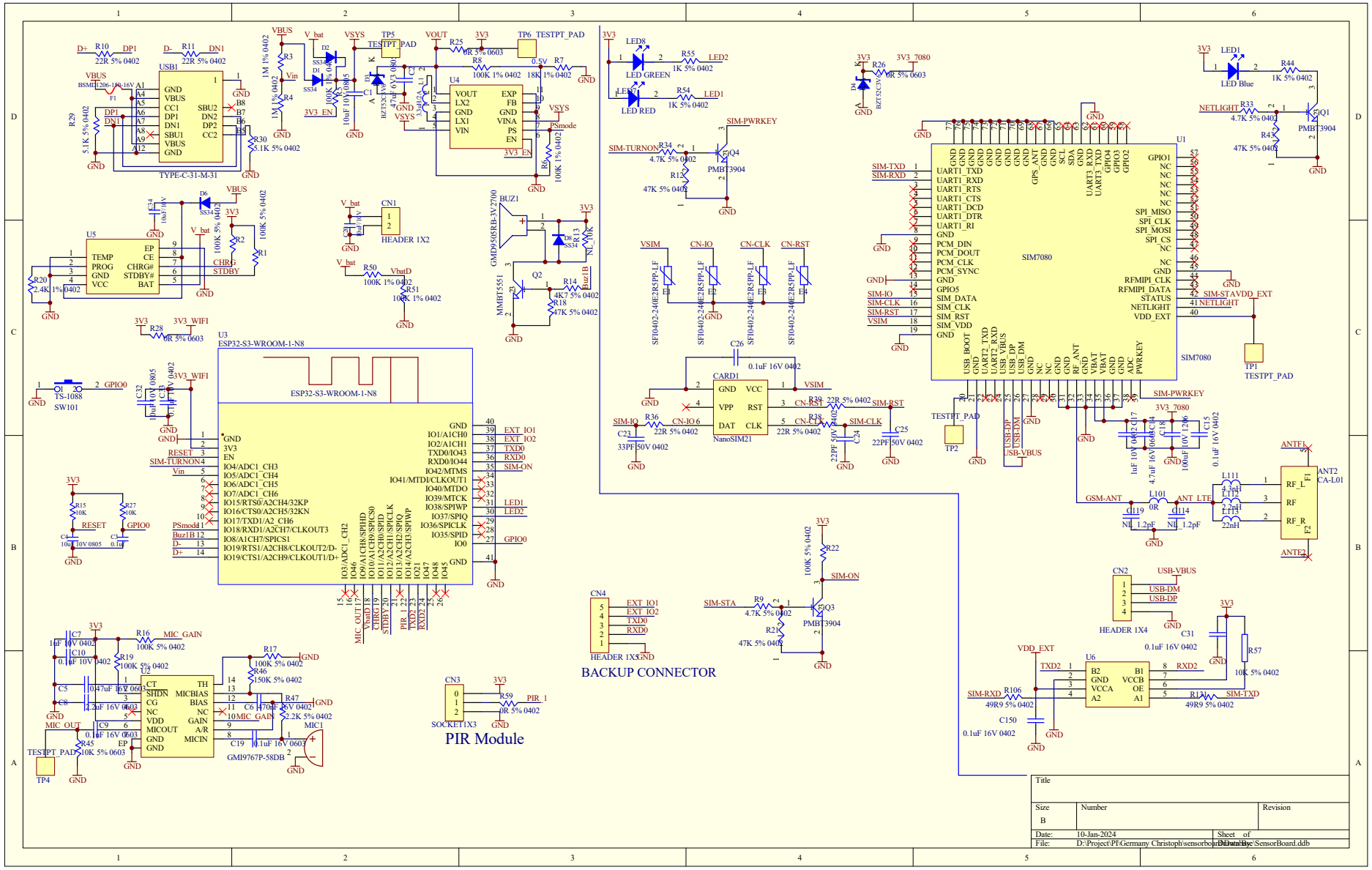
USB1
TYPE-C-31-M-31
U4
U5
U1
SIM7080
U3
ESP32-S3-WROOM-1-N8
BUZ1
GMD9505RB-3V2700
CN1
HEADER 1X2
SW101
TS-1088
U2
GMI9767P-58DB
MIC1
CN3
SOCKET1X3
PIR Module
CN4
HEADER 1X5
BACKUP CONNECTOR
CN2
HEADER 1X4
U6
CARD1
NanoSIM21
ANT2
CA-L01
LED GREEN
LED RED
LED Blue
Title
Size
B
Number
Revision
Date: 10-Jan-2024
Sheet of
File: D:\Project\PI\Germany Christoph\sensorboard\DataBase\SensorBoard.ddb