Microgrid

Tiziano Scimone (TL)
Nicola Canti
Elettra Veronica Deiana
Leonardo Scotti

Task 1: Ideal System

Edit These Parameters

Solar Power Rating

50

Initial Battery State of Charge

90

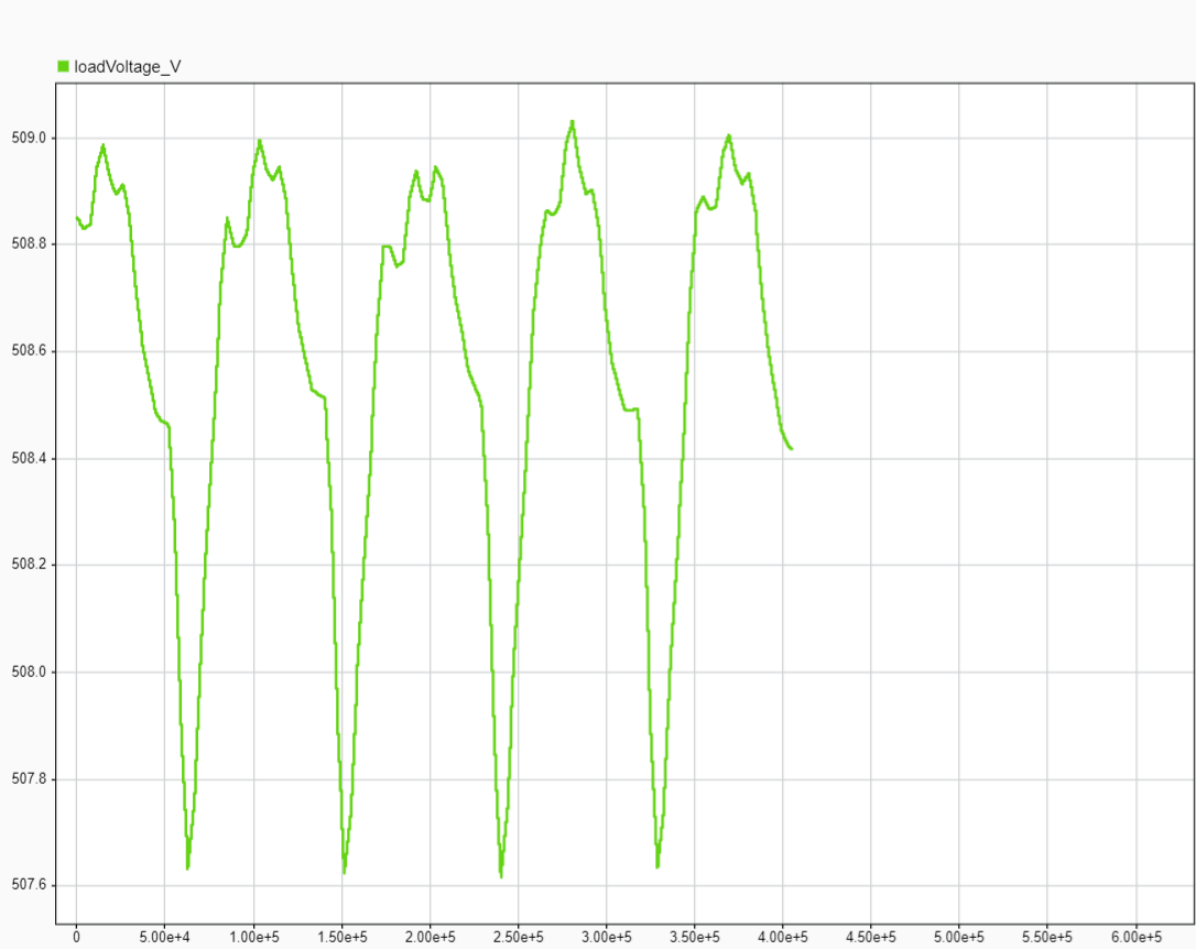

By Trial and Error methods the above values were selected to meet the required objectives.

Task 2: Maximum Power Transfer

- To find the solar cell specific maximum power point at **0,51V** and **5,2W** we did a sweep of the load resistance down to 0 Ohms.

- We found thus the optimal number of cells to be **1000** because of the 510V requirement.

- The **10 parallel strings** were then chosen because of the 50kW requirement.

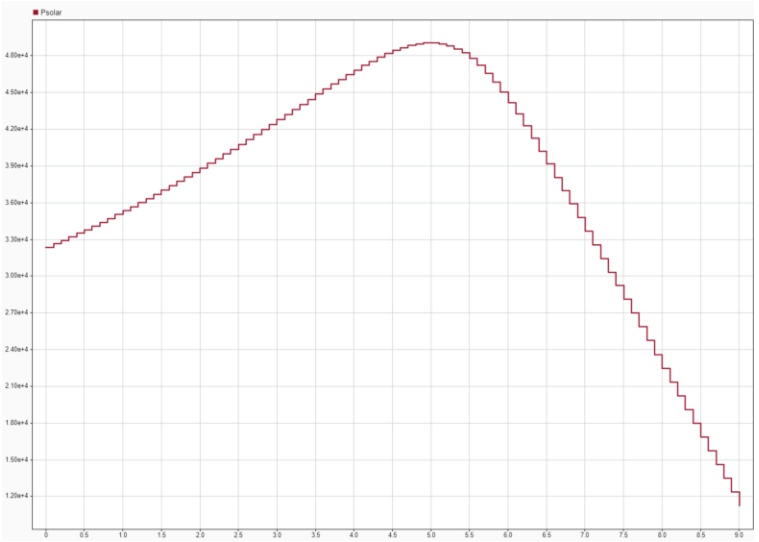

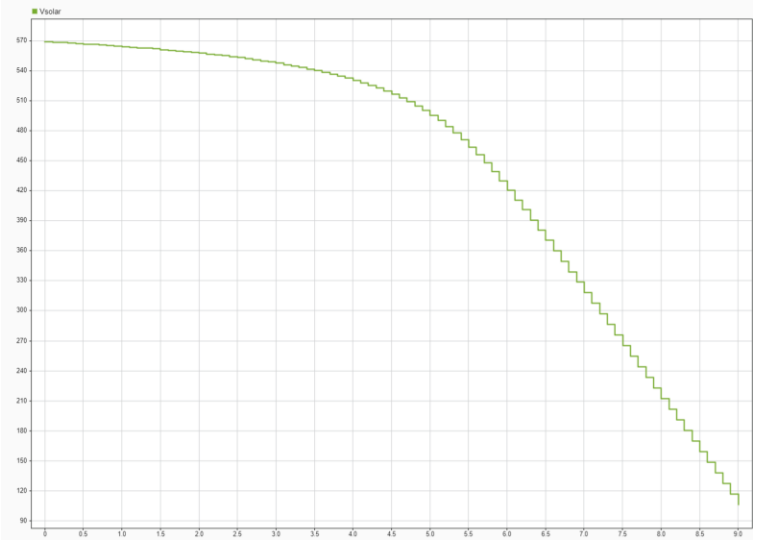

Task 3: Maximum Power Point Tracking (MPPT)

- In order to tune the MPPT algorithm the following parameters were modified:

Initial value for D output (Dinit)	0.5
Upper limit for D (Dmax)	0.9
Lower limit for D (Dmin)	0.3
Increment value used to increase/decrease (DeltaD)	0.001

- Dmax and Dmin were chosen to constrain the boundaries of the duty cycle value, and the DeltaD to allow fine variations by the controller, while still considering possible hardware limitations.

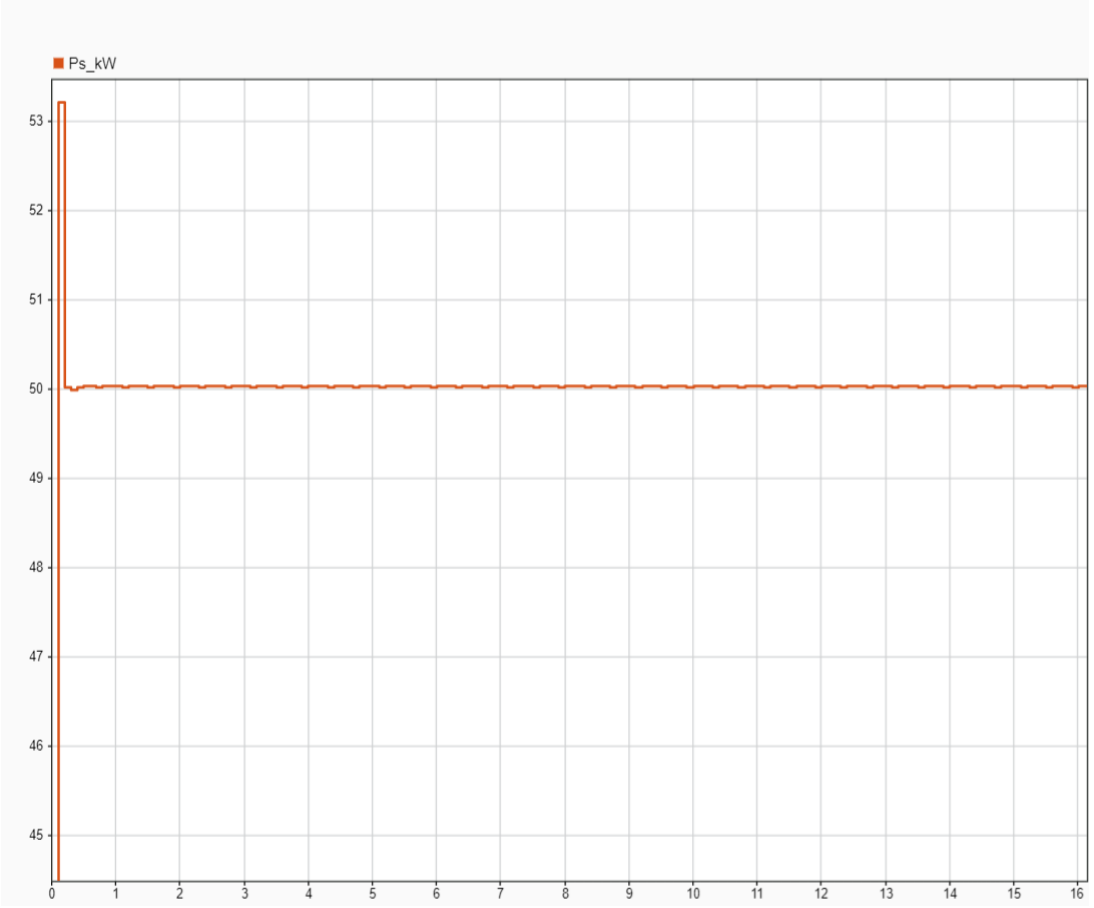

Task 4: Battery Voltage Control

To account for the load voltages requirements the Voltage Set Point was set to **514V**.

To achieve better performances the fixed step integrator's properties were set as follows:

- Gain: 5e-4
- Initial Condition: 0.455

In addition the output was saturated with the following boundaries:

- Upper limit: 0.95
- Lower limit: 0.05

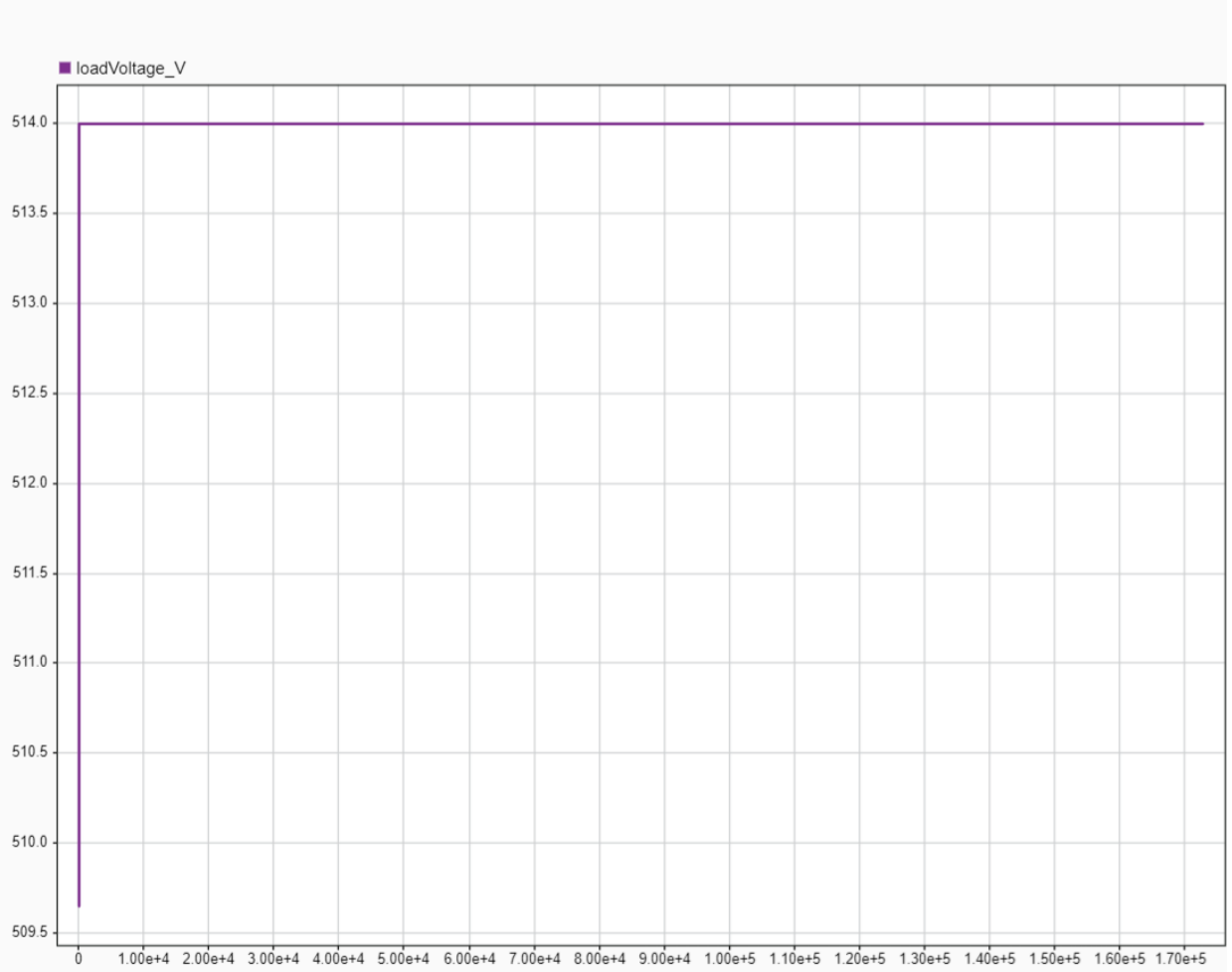

Task 5: Full System

Following the instructions, we implemented all previous tasks results into the complete system and ran the simulation.
SOC stayed **positive** throughout the entire 7-sol period.
Voltage stayed **consistent** within the **500-520V** margin.

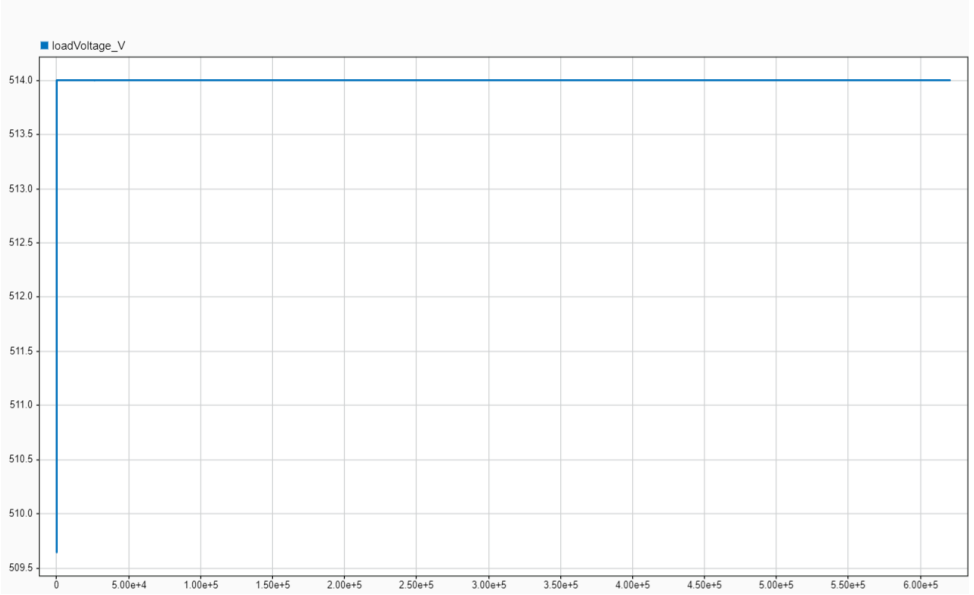

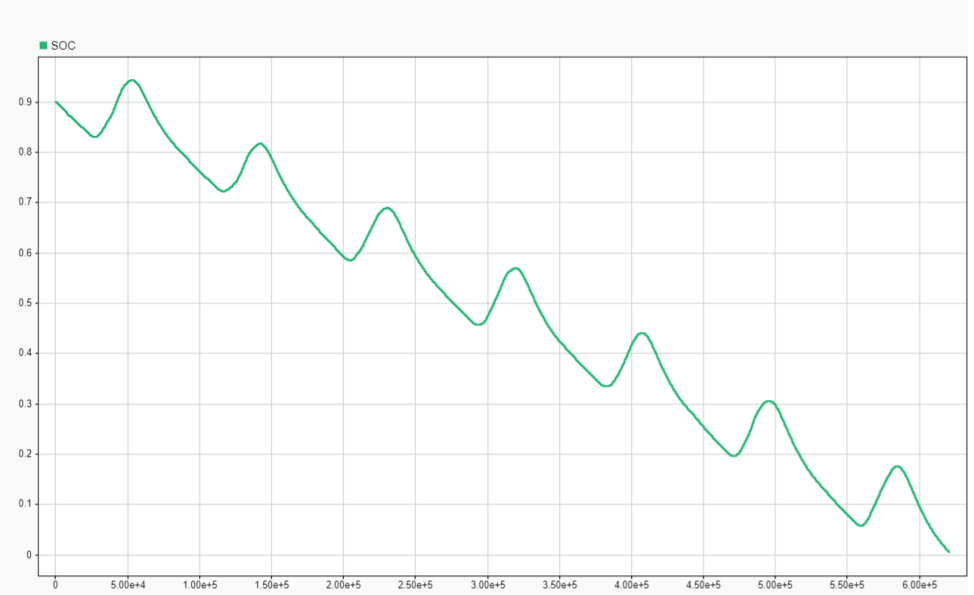

Task 5: Full System
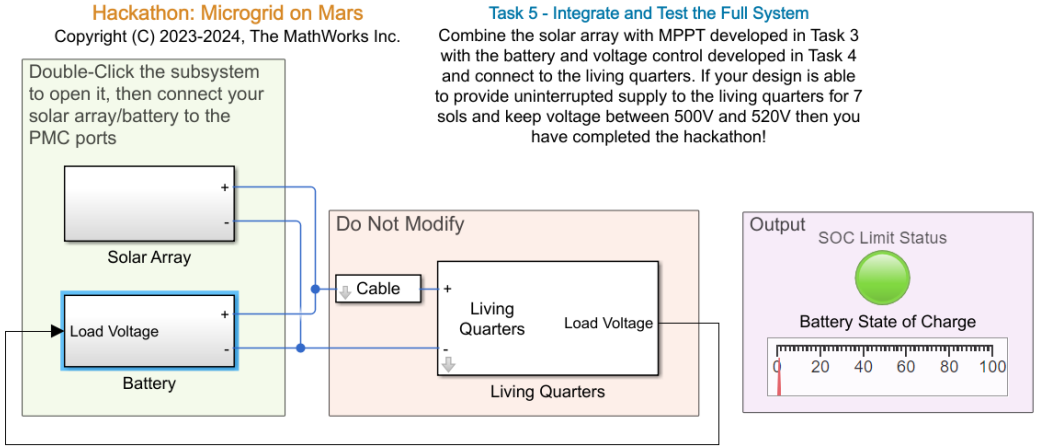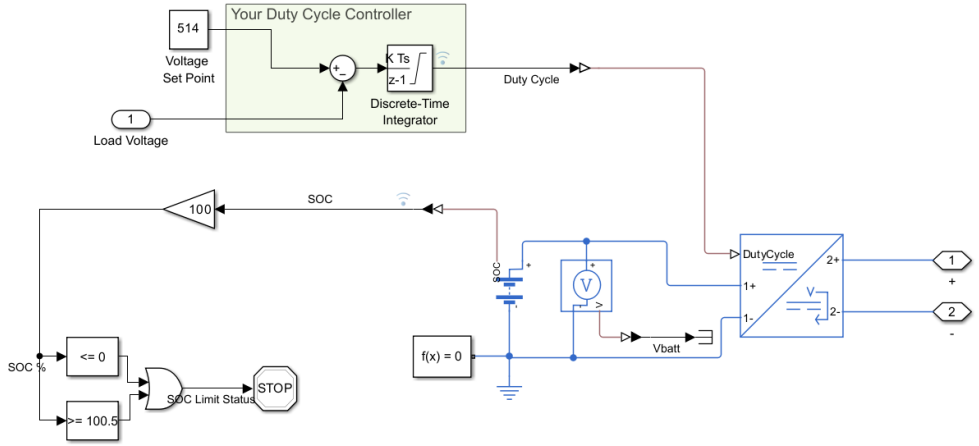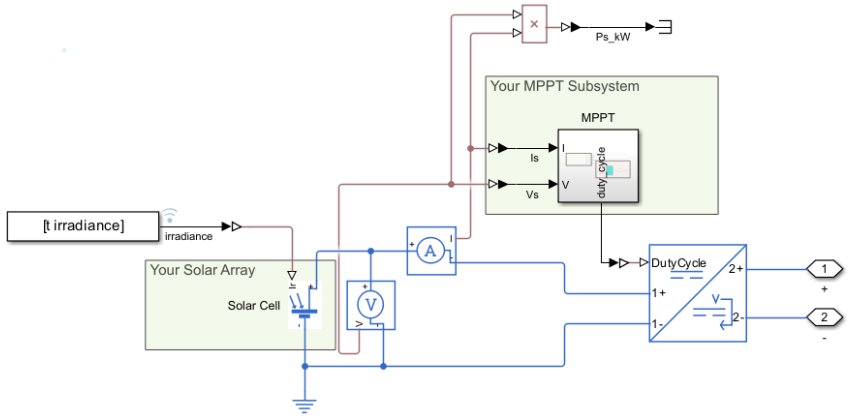
Following the instructions, we implemented all previous tasks results into the complete system and ran the simulation.
SOC stayed **positive** throughout the entire 7-sol period.
Voltage stayed **consistent** within the **500-520V** margin.