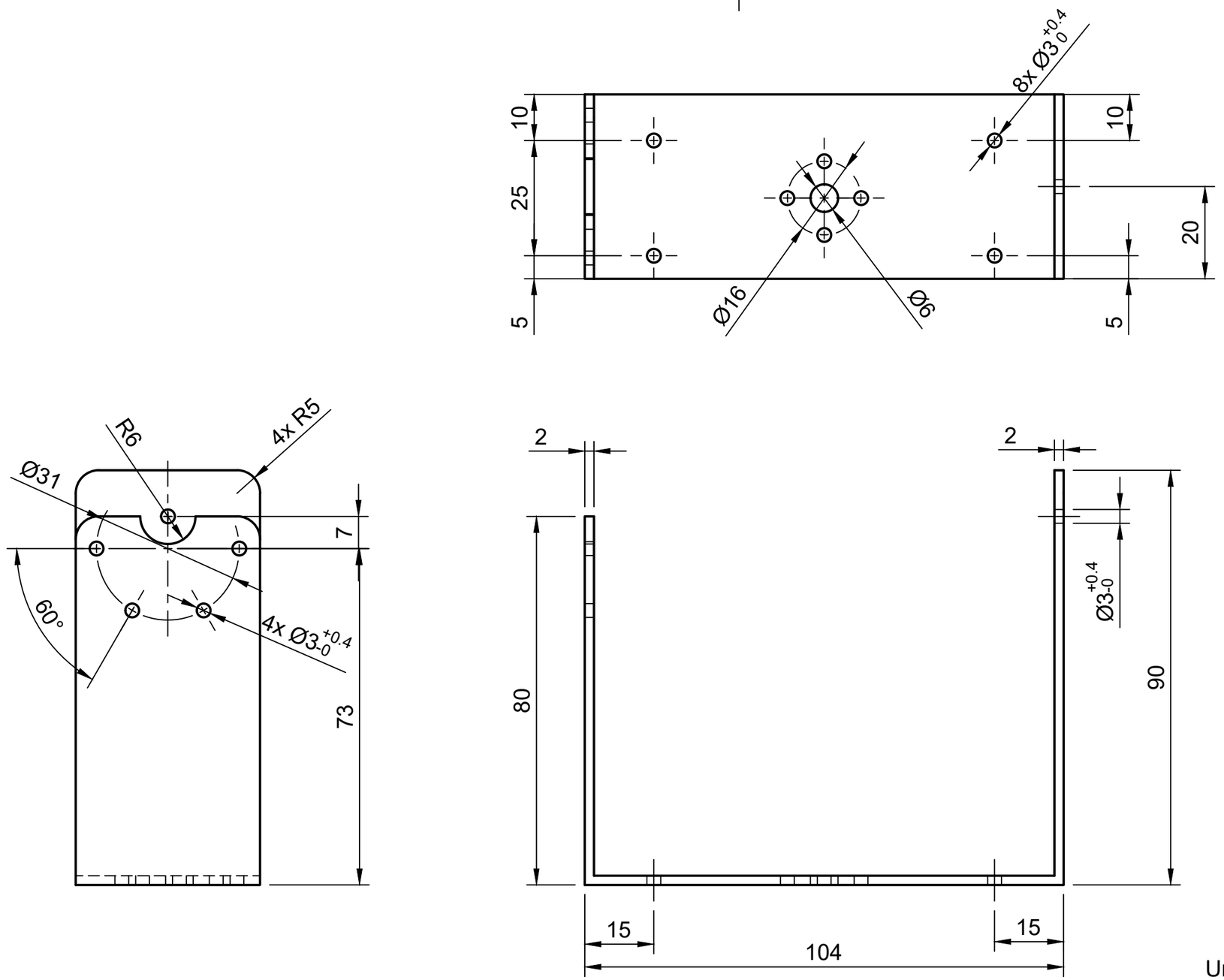

Unless specified otherwise:
All dimensions in mm
General tolerances: ISO 2768 - medium

Dept. Mechanical	Technical reference	Created by Pierre LASSUS	Approved by
3rd Angle projection Material: Aluminium		Document type	Document status
		Title Bracket 1	DWG No.
			Rev. / Date of issue / Sheet 1/1