AMBA® APB

Protocol Specification

arm

Copyright © 2003-2023 Arm Ltd. All rights reserved.
ARM IHI 0024E (ID022823)

AMBA APB
Protocol Specification

Copyright © 2003-2023 Arm Ltd. All rights reserved.

Release Information

The following changes have been made to this book.

Change history

Date	Issue	Confidentiality	Change
25 September 2003	A	Non-Confidential	First release, version 1.0
17 August 2004	B	Non-Confidential	Second release, version 1.0
13 April 2010	C	Non-Confidential	First release, version 2.0
09 April 2021	D	Non-Confidential	New features for APB5 protocol
28 February 2023	E	Non-Confidential	RME support for APB5 protocol

Proprietary Notice

This document is **NON-CONFIDENTIAL** and any use by you is subject to the terms of this notice and the Arm AMBA Specification Licence set about below.

This document is protected by copyright and other related rights and the practice or implementation of the information contained in this document may be protected by one or more patents or pending patent applications. No part of this document may be reproduced in any form by any means without the express prior written permission of Arm. No license, express or implied, by estoppel or otherwise to any intellectual property rights is granted by this document unless specifically stated.

Your access to the information in this document is conditional upon your acceptance that you will not use or permit others to use the information for the purposes of determining whether implementations infringe any third party patents.

THIS DOCUMENT IS PROVIDED "AS IS". ARM PROVIDES NO REPRESENTATIONS AND NO WARRANTIES, EXPRESS, IMPLIED OR STATUTORY, INCLUDING, WITHOUT LIMITATION, THE IMPLIED WARRANTIES OF MERCHANTABILITY, SATISFACTORY QUALITY, NON-INFRINGEMENT OR FITNESS FOR A PARTICULAR PURPOSE WITH RESPECT TO THE DOCUMENT. For the avoidance of doubt, Arm makes no representation with respect to, and has undertaken no analysis to identify or understand the scope and content of, patents, copyrights, trade secrets, or other rights.

This document may include technical inaccuracies or typographical errors.

TO THE EXTENT NOT PROHIBITED BY LAW, IN NO EVENT WILL ARM BE LIABLE FOR ANY DAMAGES, INCLUDING WITHOUT LIMITATION ANY DIRECT, INDIRECT, SPECIAL, INCIDENTAL, PUNITIVE, OR CONSEQUENTIAL DAMAGES, HOWEVER CAUSED AND REGARDLESS OF THE THEORY OF LIABILITY, ARISING OUT OF ANY USE OF THIS DOCUMENT, EVEN IF ARM HAS BEEN ADVISED OF THE POSSIBILITY OF SUCH DAMAGES.

This document consists solely of commercial items. You shall be responsible for ensuring that any use, duplication or disclosure of this document complies fully with any relevant export laws and regulations to assure that this document or any portion thereof is not exported, directly or indirectly, in violation of such export laws. Use of the word "partner" in reference to Arm's customers is not intended to create or refer to any partnership relationship with any other company. Arm may make changes to this document at any time and without notice.

This document may be translated into other languages for convenience, and you agree that if there is any conflict between the English version of this document and any translation, the terms of the English version of the Agreement shall prevail.

The Arm corporate logo and words marked with ® or ™ are registered trademarks or trademarks of Arm Limited (or its subsidiaries) in the US and/or elsewhere. All rights reserved. Other brands and names mentioned in this document may be the trademarks of their respective owners. Please follow Arm's trademark usage guidelines at http://www.arm.com/company/policies/trademarks.

Copyright © 2003-2023 Arm Limited (or its affiliates). All rights reserved.

Arm Limited. Company 02557590 registered in England.
110 Fulbourn Road, Cambridge, England CB1 9NJ.
LES-PRE-21451 version 2.2

AMBA SPECIFICATION LICENCE

THIS END USER LICENCE AGREEMENT ("LICENCE") IS A LEGAL AGREEMENT BETWEEN YOU (EITHER A SINGLE INDIVIDUAL, OR SINGLE LEGAL ENTITY) AND ARM LIMITED ("ARM") FOR THE USE OF ARM'S INTELLECTUAL PROPERTY (INCLUDING, WITHOUT LIMITATION, ANY COPYRIGHT) IN THE RELEVANT AMBA SPECIFICATION ACCOMPANYING THIS LICENCE. ARM LICENSES THE RELEVANT AMBA SPECIFICATION TO YOU ON CONDITION THAT YOU ACCEPT ALL OF THE TERMS IN THIS LICENCE. BY CLICKING "I AGREE" OR OTHERWISE USING OR COPYING THE RELEVANT AMBA SPECIFICATION YOU INDICATE THAT YOU AGREE TO BE BOUND BY ALL THE TERMS OF THIS LICENCE.

"LICENSEE" means You and your Subsidiaries.

"Subsidiary" means, if You are a single entity, any company the majority of whose voting shares is now or hereafter owned or controlled, directly or indirectly, by You. A company shall be a Subsidiary only for the period during which such control exists.

1. Subject to the provisions of Clauses 2, 3 and 4, Arm hereby grants to LICENSEE a perpetual, non-exclusive, non-transferable, royalty free, worldwide licence to:

   (i) use and copy the relevant AMBA Specification for the purpose of developing and having developed products that comply with the relevant AMBA Specification;

   (ii) manufacture and have manufactured products which either: (a) have been created by or for LICENSEE under the licence granted in Clause 1(i); or (b) incorporate a product(s) which has been created by a third party(s) under a licence granted by Arm in Clause 1(i) of such third party's AMBA Specification Licence; and

   (iii) offer to sell, sell, supply or otherwise distribute products which have either been (a) created by or for LICENSEE under the licence granted in Clause 1(i); or (b) manufactured by or for LICENSEE under the licence granted in Clause 1(ii).

2. LICENSEE hereby agrees that the licence granted in Clause 1 is subject to the following restrictions:

   (i) where a product created under Clause 1(i) is an integrated circuit which includes a CPU then either: (a) such CPU shall only be manufactured under licence from Arm; or (b) such CPU is neither substantially compliant with nor marketed as being compliant with the Arm instruction sets licensed by Arm from time to time;

   (ii) the licences granted in Clause 1(iii) shall not extend to any portion or function of a product that is not itself compliant with part of the relevant AMBA Specification; and

   (iii) no right is granted to LICENSEE to sublicense the rights granted to LICENSEE under this Agreement.

3. Except as specifically licensed in accordance with Clause 1, LICENSEE acquires no right, title or interest in any Arm technology or any intellectual property embodied therein. In no event shall the licences granted in accordance with Clause 1 be construed as granting LICENSEE, expressly or by implication, estoppel or otherwise, a licence to use any Arm technology except the relevant AMBA Specification.

4. THE RELEVANT AMBA SPECIFICATION IS PROVIDED "AS IS" WITH NO REPRESENTATION OR WARRANTIES EXPRESS, IMPLIED OR STATUTORY, INCLUDING BUT NOT LIMITED TO ANY WARRANTY OF SATISFACTORY QUALITY, MERCHANTABILITY, NON-INFRINGEMENT OR FITNESS FOR A PARTICULAR PURPOSE, OR THAT ANY USE OR IMPLEMENTATION OF SUCH ARM TECHNOLOGY WILL NOT INFRINGE ANY THIRD PARTY PATENTS, COPYRIGHTS, TRADE SECRETS OR OTHER INTELLECTUAL PROPERTY RIGHTS.

5. NOTWITHSTANDING ANYTHING TO THE CONTRARY CONTAINED IN THIS AGREEMENT, TO THE FULLEST EXTENT PETMITTED BY LAW, THE MAXIMUM LIABILITY OF ARM IN AGGREGATE FOR ALL CLAIMS MADE AGAINST ARM, IN CONTRACT, TORT OR OTHERWISE, IN CONNECTION WITH THE SUBJECT MATTER OF THIS AGREEMENT (INCLUDING WITHOUT LIMITATION (I) LICENSEE'S USE OF THE ARM TECHNOLOGY; AND (II) THE IMPLEMENTATION OF THE ARM TECHNOLOGY IN ANY PRODUCT CREATED BY LICENSEE UNDER THIS AGREEMENT) SHALL NOT EXCEED THE FEES PAID (IF ANY) BY LICENSEE TO ARM UNDER THIS AGREEMENT. THE EXISTENCE OF MORE THAN ONE CLAIM OR SUIT WILL NOT ENLARGE OR EXTEND THE LIMIT. LICENSEE RELEASES ARM FROM ALL OBLIGATIONS, LIABILITY, CLAIMS OR DEMANDS IN EXCESS OF THIS LIMITATION.

6. No licence, express, implied or otherwise, is granted to LICENSEE, under the provisions of Clause 1, to use the Arm tradename, or AMBA trademark in connection with the relevant AMBA Specification or any products based thereon. Nothing in Clause 1 shall be construed as authority for LICENSEE to make any representations on behalf of Arm in respect of the relevant AMBA Specification.

7. This Licence shall remain in force until terminated by you or by Arm. Without prejudice to any of its other rights if LICENSEE is in breach of any of the terms and conditions of this Licence then Arm may terminate this Licence immediately upon giving written notice to You. You may terminate this Licence at any time. Upon expiry or termination

Copyright © 2003-2023 Arm Ltd. All rights reserved.
Non-Confidential

of this Licence by You or by Arm LICENSEE shall stop using the relevant AMBA Specification and destroy all copies of the relevant AMBA Specification in your possession together with all documentation and related materials. Upon expiry or termination of this Licence, the provisions of clauses 6 and 7 shall survive.

8. The validity, construction and performance of this Agreement shall be governed by English Law.

Confidentiality Status

This document is Non-Confidential. The right to use, copy and disclose this document may be subject to license restrictions in accordance with the terms of the agreement entered into by Arm and the party that Arm delivered this document to.

Product Status

The information in this document is final, that is for a developed product.

Web Address

`http://www.arm.com`

Copyright © 2003-2023 Arm Ltd. All rights reserved.
Non-Confidential

Contents
AMBA APB Protocol Specification

Preface
About this specification viii
APB Revisions x
Feedback xi

Chapter 1 Introduction
1.1 About the APB protocol 1-14

Chapter 2 Signal Descriptions
2.1 AMBA APB signals 2-16

Chapter 3 Transfers
3.1 Write transfers 3-20
3.2 Write strobes 3-22
3.3 Read transfers 3-23
3.4 Error response 3-25
3.5 Protection unit support 3-27
3.6 Realm Management Extension, RME 3-28
3.7 Wake-up signaling 3-29
3.8 User signaling 3-30

Chapter 4 Operating States
4.1 Operating states 4-34

Chapter 5 Interface parity protection
5.1 Protection using parity 5-36
5.2 Configuration of interface protection 5-37
5.3 Parity check 5-38

Copyright © 2003-2023 Arm Ltd. All rights reserved.
Non-Confidential

5.4 Error detection behavior 5-39
5.5 Parity check signals 5-40

Appendix A Signal validity
A.1 Validity rules A-42

Appendix B Signal list
B.1 APB signals B-44

Appendix C Revisions

Copyright © 2003-2023 Arm Ltd. All rights reserved.
Non-Confidential

Preface

This preface introduces the *AMBA APB Protocol Specification*. It contains the following sections:

- *About this specification* on page viii
- *Feedback* on page xi

Copyright © 2003-2023 Arm Ltd. All rights reserved.
Non-Confidential

About this specification

This specification is for the *Advanced Microcontroller Bus Architecture* (AMBA) *Advanced Peripheral Bus* (APB) Protocol Specification.

Intended audience

This specification is written for hardware and software engineers who want to become familiar with the AMBA APB protocol.

Using this book

This specification is organized into the following chapters:

Chapter 1 *Introduction*

Read this for an overview of the APB protocol.

Chapter 2 *Signal Descriptions*

Read this for a description of the APB signals and their characteristics.

Chapter 3 *Transfers*

Read this for information about the typical types of APB transfer, error responses, and protection support.

Chapter 4 *Operating States*

Read this for descriptions of APB operating states and their transpositions.

Chapter 5 *Interface parity protection*

Read this for information about parity protection and check signals.

Appendix A *Signal validity*

Read this for a summary of rules when signals are valid.

Appendix B *Signal list*

Read this for signal matrix of all APB protocol signals.

Appendix C *Revisions*

Read this for a description of the technical changes between released issues of this book.

Conventions

Conventions that this specification can use are described in:

- *Typographical*
- *Timing diagrams* on page ix
- *Signals* on page ix

Typographical

The typographical conventions are:

italic Highlights important notes, introduces special terminology, denotes internal cross-references, and citations.

bold Highlights interface elements, such as menu names. Denotes signal names. Also used for terms in descriptive lists, where appropriate.

Copyright © 2003-2023 Arm Ltd. All rights reserved.
Non-Confidential

Timing diagrams

The components used in timing diagrams are explained in the figure *Key to timing diagram conventions*. Variations have clear labels, when they occur. Do not assume any timing information that is not explicit in the diagrams.

Shaded bus and signal areas are undefined, so the bus or signal can assume any value within the shaded area at that time. The actual level is unimportant and does not affect normal operation.

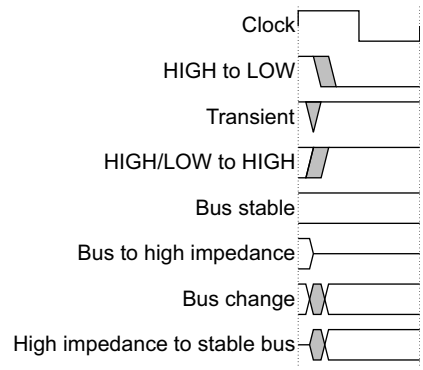

Key to timing diagram conventions

Timing diagrams sometimes show single-bit signals as HIGH and LOW at the same time and they look similar to the bus change shown in *Key to timing diagram conventions*. If a timing diagram shows a single-bit signal in this way then its value does not affect the accompanying description.

Signals

The signal conventions are:

Signal level The level of an asserted signal depends on whether the signal is active-HIGH or active-LOW. Asserted means:
- HIGH for active-HIGH signals
- LOW for active-LOW signals.

Lower-case n At the start or end of a signal name denotes an active-LOW signal.

Additional reading

This section lists publications by Arm and by third parties.

See Arm Developer `https://developer.arm.com/documentation` for access to Arm documentation.

Arm publications

This specification contains information that is specific to this product. See the following documents for other relevant information:
- *AMBA AXI and ACE Protocol Specification* (ARM IHI 0022)
- *Arm® Realm Management Extension (RME) System Architecture Specification* (DEN 0129)

Copyright © 2003-2023 Arm Ltd. All rights reserved.
Non-Confidential

APB Revisions

APB Specification Rev E

The *APB Specification Rev E*, released in 1998, is now obsolete.

AMBA 2 APB Specification (Issue A)

The AMBA 2 APB Specification is detailed in *AMBA Specification Rev 2* (ARM IHI 0011A).

This version of the specification is referred to as APB2.

AMBA 3 APB Specification (Issue B)

The *AMBA 3 APB Protocol Specification v1.0* defines the following additional functionality:

- Wait states. See Chapter 3 *Transfers*.
- Error reporting. See *Error response* on page 3-25.

The following interface signals support this functionality:

PREADY A ready signal to indicate completion of an APB transfer.

PSLVERR An error signal to indicate the failure of a transfer.

This version of the specification is referred to as APB3.

AMBA APB Specification (Issue C)

The *AMBA APB Protocol Specification v2.0* defines the following additional functionality:

- Transaction protection. See *Protection unit support* on page 3-27.
- Sparse data transfer. See *Write strobes* on page 3-22.

The following interface signals support this functionality:

PPROT A protection signal to support both non-secure and secure transactions on APB.

PSTRB A write strobe signal to enable sparse data transfer on the write data bus.

This version of the specification is referred to as APB4.

AMBA APB Specification (Issue D)

The *AMBA APB Protocol Specification Issue D* defines the following additional functionality:

- Wakeup signaling. See *Wake-up signaling* on page 3-29.
- User signaling. See *User signaling* on page 3-30.
- Parity protection and check signals. See Chapter 5 *Interface parity protection*.

This version of the specification is referred to as APB5.

AMBA APB Specification (Issue E)

The *AMBA APB Protocol Specification Issue E* defines the following optional functionality for APB5 interfaces:

- *Realm Management Extension* (RME) support. See *Realm Management Extension, RME* on page 3-28.

This version of the specification remains APB5.

Copyright © 2003-2023 Arm Ltd. All rights reserved.
Non-Confidential

Feedback

Arm welcomes feedback on this product and its documentation.

Feedback on content

If you have comments on content then send an e-mail to errata@arm.com. Give:

- The title, AMBA APB Protocol Specification
- The number, ARM IHI 0024E
- The page numbers to which your comments apply
- A concise explanation of your comments

Arm also welcomes general suggestions for additions and improvements.

Progressive terminology commitment

Arm values inclusive communities. Arm recognizes that we and our industry have terms that can be offensive.

Arm strives to lead the industry and create change.

Previous issues of this document included terms that can be offensive. We have replaced these terms. If you find offensive terms in this document, please contact terms@arm.com.

Copyright © 2003-2023 Arm Ltd. All rights reserved.
Non-Confidential

Copyright © 2003-2023 Arm Ltd. All rights reserved.
Non-Confidential

Chapter 1
Introduction

This chapter provides an overview of the APB protocol. It contains the following sections:

- *About the APB protocol* on page 1-14

Copyright © 2003-2023 Arm Ltd. All rights reserved.
Non-Confidential

1.1 About the APB protocol

The APB protocol is a low-cost interface, optimized for minimal power consumption and reduced interface complexity. The APB interface is not pipelined and is a simple, synchronous protocol. Every transfer takes at least two cycles to complete.

The APB interface is designed for accessing the programmable control registers of peripheral devices. APB peripherals are typically connected to the main memory system using an APB bridge. For example, a bridge from AXI to APB could be used to connect a number of APB peripherals to an AXI memory system.

APB transfers are initiated by an APB bridge. APB bridges can also be referred to as a Requester. A peripheral interface responds to requests. APB peripherals can also be referred to as a Completer. This specification will use Requester and Completer.

Copyright © 2003-2023 Arm Ltd. All rights reserved.
Non-Confidential

Chapter 2
Signal Descriptions

This chapter describes the AMBA APB signals. It contains the following section:

- *AMBA APB signals* on page 2-16

Copyright © 2003-2023 Arm Ltd. All rights reserved.
Non-Confidential

2.1 AMBA APB signals

This section describes the APB interface signals.

Some signals on the APB interface have a fixed width and some can take a variety of widths. When the width is not fixed, it is described using a property. If the property value is zero, this means the signal is not present on the interface.

Table 2-1 provides a description of the APB protocol interface signals.

Table 2-1 APB signal descriptions

Signal	Source	Width	Description
PCLK	Clock	1	Clock. **PCLK** is a clock signal. All APB signals are timed against the rising edge of **PCLK**.
PRESETn	System bus reset	1	Reset. **PRESETn** is the reset signal and is active-LOW. **PRESETn** is normally connected directly to the system bus reset signal.
PADDR	Requester	ADDR_WIDTH	Address. **PADDR** is the APB address bus. **PADDR** can be up to 32 bits wide.
PPROT	Requester	3	Protection type. **PPROT** indicates the normal, privileged, or secure protection level of the transaction and whether the transaction is a data access or an instruction access. See *Protection unit support* on page 3-27.
PNSE	Requester	1	Extension to protection type. See *Realm Management Extension, RME* on page 3-28.
PSELx	Requester	1	Select. The Requester generates a **PSELx** signal for each Completer. **PSELx** indicates that the Completer is selected and that a data transfer is required.
PENABLE	Requester	1	Enable. **PENABLE** indicates the second and subsequent cycles of an APB transfer.
PWRITE	Requester	1	Direction. **PWRITE** indicates an APB write access when HIGH and an APB read access when LOW.
PWDATA	Requester	DATA_WIDTH	Write data. The **PWDATA** write data bus is driven by the APB bridge Requester during write cycles when **PWRITE** is HIGH. **PWDATA** can be 8 bits, 16 bits, or 32 bits wide.

Copyright © 2003-2023 Arm Ltd. All rights reserved.
Non-Confidential

Table 2-1 APB signal descriptions (continued)

Signal	Source	Width	Description
PSTRB	Requester	DATA_WIDTH/8	Write strobe. **PSTRB** indicates which byte lanes to update during a write transfer. There is one write strobe for each 8 bits of the write data bus. **PSTRB[n]** corresponds to **PWDATA[(8n + 7):(8n)]**. **PSTRB** must not be active during a read transfer. See *Write strobes* on page 3-22.
PREADY	Completer	1	Ready. **PREADY** is used to extend an APB transfer by the Completer.
PRDATA	Completer	DATA_WIDTH	Read data. The **PRDATA** read data bus is driven by the selected Completer during read cycles when **PWRITE** is LOW. **PRDATA** can be 8 bits, 16 bits, or 32 bits wide.
PSLVERR	Completer	1	Transfer error. **PSLVERR** is an optional signal that can be asserted HIGH by the Completer to indicate an error condition on an APB transfer. See *Error response* on page 3-25.
PWAKEUP	Requester	1	Wake-up. **PWAKEUP** indicates any activity associated with an APB interface. See *Wake-up signaling* on page 3-29.
PAUSER	Requester	USER_REQ_WIDTH	User request attribute. **PAUSER** is recommended to have a maximum width of 128 bits. See *User signaling* on page 3-30.
PWUSER	Requester	USER_DATA_WIDTH	User write data attribute. **PWUSER** is recommended to have a maximum width of DATA_WIDTH/2. See *User signaling* on page 3-30.
PRUSER	Completer	USER_DATA_WIDTH	User read data attribute. **PRUSER** is recommended to have a maximum width of DATA_WIDTH/2. See *User signaling* on page 3-30.
PBUSER	Completer	USER_RESP_WIDTH	User response attribute. **PBUSER** is recommended to have a maximum width of 16 bits. See *User signaling* on page 3-30.

2.1.1 Address bus

An APB interface has a single address bus, **PADDR**, for read and write transfers. **PADDR** indicates a byte address.

Copyright © 2003-2023 Arm Ltd. All rights reserved.
Non-Confidential

PADDR is permitted to be unaligned with respect to the data width, but the result is UNPREDICTABLE. For example, a Completer might use the unaligned address, aligned address, or signal an error response.

2.1.2 Data buses

The APB protocol has two independent data buses, **PRDATA** for read data and **PWDATA** for write data,. The buses can be 8 bits, 16 bits, or 32 bits wide. The read and write data buses must have the same width.

Data transfers cannot occur concurrently because the read data and write data buses do not have their own individual handshake signals.

Copyright © 2003-2023 Arm Ltd. All rights reserved.
Non-Confidential

Chapter 3
Transfers

This chapter describes typical AMBA APB transfers, the error response, and protection unit support. It contains the following sections:

- *Write transfers* on page 3-20
- *Write strobes* on page 3-22
- *Read transfers* on page 3-23
- *Error response* on page 3-25
- *Protection unit support* on page 3-27
- *Realm Management Extension, RME* on page 3-28
- *Wake-up signaling* on page 3-29
- *User signaling* on page 3-30

Copyright © 2003-2023 Arm Ltd. All rights reserved.
Non-Confidential

3.1 Write transfers

This section describes the following types of write transfer:

- With no wait states
- With wait states

All signals shown in this section are sampled at the rising edge of **PCLK**.

3.1.1 With no wait states

Figure 3-1 shows a basic write transfer with no wait states.

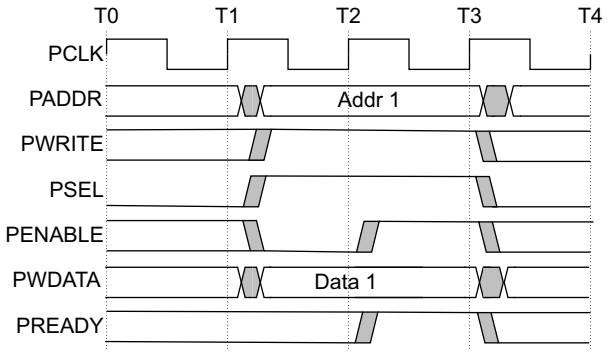

Figure 3-1 Write transfer with no wait states

The Setup phase of the write transfer occurs at T1 in Figure 3-1. The select signal, **PSEL**, is asserted, which means that **PADDR**, **PWRITE**, and **PWDATA** must be valid.

The Access phase of the write transfer is shown at T2 in Figure 3-1 where **PENABLE** is asserted. **PREADY** is asserted by the Completer at the rising edge of **PCLK** to indicate that the write data will be accepted at T3. **PADDR**, **PWDATA**, and any other control signals, must be stable until the transfer completes.

At the end of the transfer, **PENABLE** is deasserted. **PSEL** is also deasserted, unless there is another transfer to the same peripheral.

Copyright © 2003-2023 Arm Ltd. All rights reserved.
Non-Confidential

3.1.2 With wait states

Figure 3-2 shows how the Completer can use **PREADY** to extend the transfer.

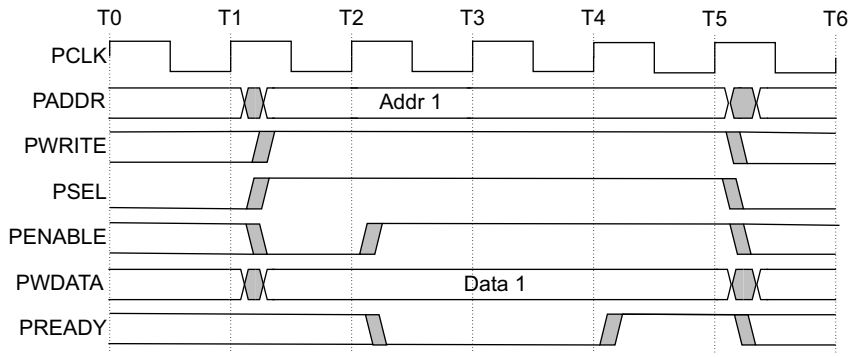

Figure 3-2 Write transfer with wait states

During an Access phase, when **PENABLE** is HIGH, the Completer extends the transfer by driving **PREADY** LOW. The following signals remain unchanged while **PREADY** remains LOW:

- Address signal, **PADDR**
- Direction signal, **PWRITE**
- Select signal, **PSELx**
- Enable signal, **PENABLE**
- Write data signal, **PWDATA**
- Write strobe signal, **PSTRB**
- Protection type signal, **PPROT**
- User request attribute, **PAUSER**
- User write data attribute, **PWUSER**

PREADY can take any value when **PENABLE** is LOW. This ensures that peripherals that have a fixed two cycle access can tie **PREADY** HIGH.

Copyright © 2003-2023 Arm Ltd. All rights reserved.
Non-Confidential

3.2 Write strobes

PSTRB enables sparse data transfer on the write data bus. Each **PSTRB** corresponds to 1 byte of the write data bus. When asserted HIGH, **PSTRB** indicates that the corresponding byte lane of the write data bus contains valid information.

There is one write strobe for each 8 bits of the write data bus, so **PSTRB[n]** corresponds to **PWDATA[(8n + 7):(8n)]**.

Figure 3-3 shows this relationship on a 32-bit data bus.

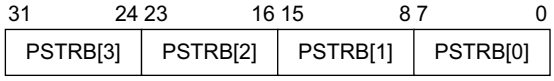

Figure 3-3 Byte lane mapping

For read transfers, the Requester must drive all bits of **PSTRB** LOW.

3.2.1 PSTRB presence and compatibility

PSTRB is an optional signal. An APB peripheral might support a limited set of access types, which must be documented for the programmer. This means that all combinations of **PSTRB** presence might be compatible, if this document states that sparse writes are not supported.

The compatibility of **PSTRB** when connecting Requesters and Completers is described inTable 3-1.

Table 3-1 PSTRB presence and compatibility

PSTRB	Completer: signal not present	Completer: signal present
Requester: signal not present	Compatible. Sparse writes are not supported.	Compatible. All write data byte lanes are valid for a write. Tie the **PSTRB** inputs to the **PWRITE** output from the Requester.
Requester: signal present	Compatible. Sparse writes are not supported.	Compatible.

Copyright © 2003-2023 Arm Ltd. All rights reserved.
Non-Confidential

3.3 Read transfers

Two types of read transfer are described in this section:

- With no wait states
- With wait states

All signals shown in this section are sampled at the rising edge of **PCLK**.

3.3.1 With no wait states

Figure 3-4 shows a read transfer.

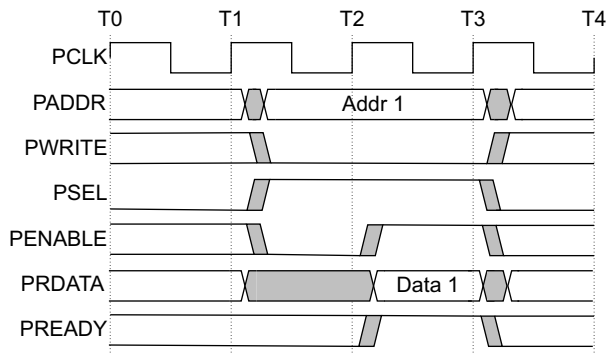

Figure 3-4 Read transfer with no wait states

The timing of the address, **PADDR**, write, **PWRITE**, select, **PSEL**, and enable, **PENABLE**, signals are the same as described in *Write transfers* on page 3-20. The Completer must provide the data before the end of the read transfer.

3.3.2 With wait states

Figure 3-5 shows how the **PREADY** signal can extend the transfer.

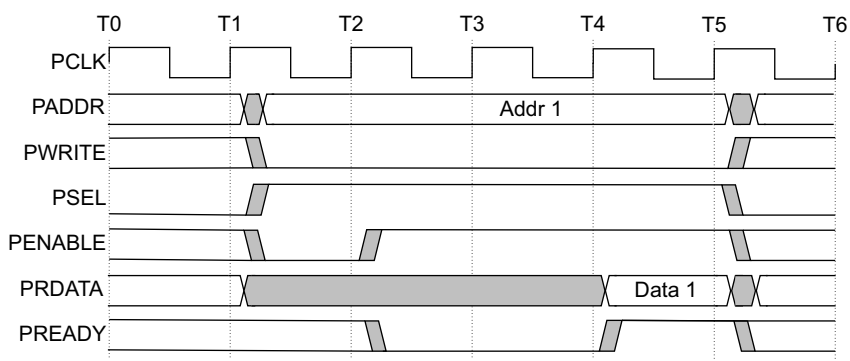

Figure 3-5 Read transfer with wait states

The transfer is extended if **PREADY** is driven LOW during an Access phase. The following signals remain unchanged while **PREADY** remains LOW:

- Address signal, **PADDR**
- Direction signal, **PWRITE**
- Select signal, **PSEL**
- Enable signal, **PENABLE**
- Protection signal, **PPROT**
- User signal, **PAUSER**

Copyright © 2003-2023 Arm Ltd. All rights reserved.
Non-Confidential

Figure 3-5 on page 3-23 shows that two cycles are added using **PREADY**. However, any number of additional cycles can be added, from zero upwards.

Copyright © 2003-2023 Arm Ltd. All rights reserved.
Non-Confidential

3.4 Error response

PSLVERR can be used to indicate an error condition on an APB transfer. Error conditions can occur on both read and write transactions.

PSLVERR is only considered valid during the last cycle of an APB transfer, when **PSEL**, **PENABLE**, and **PREADY** are all HIGH.

It is recommended, but not required, that **PSLVERR** is driven LOW when **PSEL**, **PENABLE**, or **PREADY** are LOW.

Transactions that receive an error might or might not have changed the state of the peripheral. This is peripheral-specific and either state is acceptable.

When a write transaction receives an error, this does not mean that the register within the peripheral has not been updated.

Read transactions that receive an error can return invalid data. There is no requirement for the peripheral to drive the data bus to all 0s for a read error. A Requester which receives an error response to a read transfer might still use the data. A Completer cannot rely on the error response to prevent the reading of a value on **PRDATA**.

Completers are not required to support **PSLVERR**. Where a Completer does not include **PSLVERR**, the appropriate input to the Requester is tied LOW.

3.4.1 Write transfer

Figure 3-6 shows an example of a failing write transfer that completes with an error.

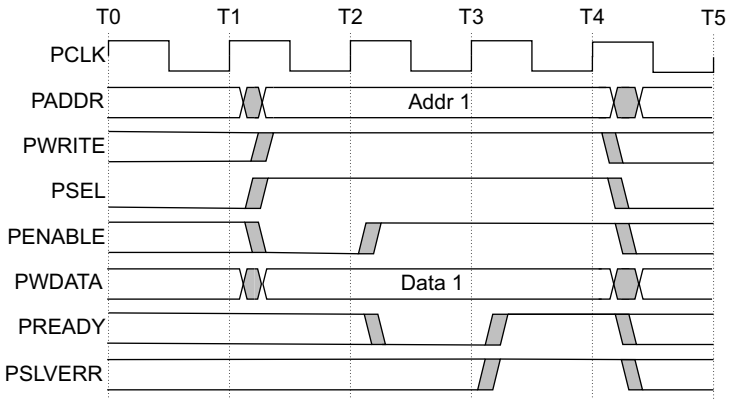

Figure 3-6 Example failing write transfer

Copyright © 2003-2023 Arm Ltd. All rights reserved.
Non-Confidential

3.4.2 Read transfer

A read transfer can also complete with an error response, indicating that there is no valid read data available.

Figure 3-7 shows a read transfer completing with an error response.

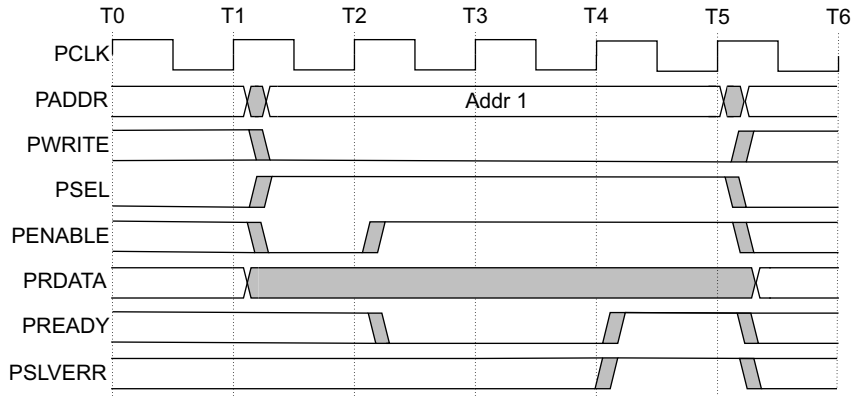

Figure 3-7 Example failing read transfer

3.4.3 Mapping of PSLVERR

When bridging:

From AXI to APB An APB error on **PSLVERR** is mapped back to **RRESP** for reads and **BRESP** for writes.

From AHB to APB An APB error on **PSLVERR** is mapped back to **HRESP** for reads and writes.

Copyright © 2003-2023 Arm Ltd. All rights reserved.
Non-Confidential

3.5 Protection unit support

To support complex system designs, it is often necessary for both the interconnect and other devices in the system to provide protection against illegal transactions. For the APB interface, this protection is provided by the **PPROT[2:0]** signals.

Table 3-2 shows the three levels of access protection with the protection level encoding.

Table 3-2 Access protection

PPROT	Protection	Description	Comments
PPROT[0]	Normal or Privileged	**PPROT[0]** is used by Requesters to indicate processing mode. A privileged processing mode typically has a greater level of access within a system.	• LOW indicates normal access. • HIGH indicates privileged access.
PPROT[1]	Secure or Non-secure	**PPROT[1]** is used in systems where a greater degree of differentiation between processing modes is required.	• LOW indicates secure access. • HIGH indicates non-secure access.
PPROT[2]	Data or Instruction	**PPROT[2]** gives an indication if the transaction is a data or instruction access. The transaction indication is provided as a hint and might not be accurate in all cases.	• LOW indicates data access. • HIGH indicates instruction access.

Note

The primary use of **PPROT** is as an identifier for Secure or Non-secure transactions. It is acceptable to use different interpretations of the **PPROT[0]** and **PPROT[2]** identifiers.

3.5.1 PPROT presence and compatibility

PPROT is an optional signal on Requester and Completer interfaces.

Table 3-3 describes the **PPROT** compatibility when connecting a Completer to a Requester.

Table 3-3 PPROT presence and compatibility

PPROT	Completer: signal not present	Completer: signal present
Requester: signal not present	Compatible.	Not compatible. If fixed protection attributes are functionally correct, then the interfaces are Compatible. See Table 3-2 on page 3-27.
Requester: signal present	Compatible. The Completer has no access protection so **PPROT** can be ignored.	Compatible.

Copyright © 2003-2023 Arm Ltd. All rights reserved.
Non-Confidential

3.6 Realm Management Extension, RME

This section describes the APB protocol support for *Arm® Realm Management Extension (RME) System Architecture*.

3.6.1 Root and Realm physical address space

The RME adds Root and Realm physical address spaces into the Arm architecture. These can be used in permission checks of APB transactions.

Table 3-4 lists the additional signal added onto an APB5 interface to support RME.

Table 3-4 PNSE signal description

Signal	Width	Source	Description
PNSE	1	Requester	Extension to protection type. **PNSE** must be valid when **PSEL** is asserted.

Table 3-5 lists the permitted combinations of **PNSE** and **PPROT[1]** that determines the physical address space of the transaction.

Table 3-5 PNSE and PPROT[1] with the resulting physical address space

PNSE	PPROT[1]	Physical address space
0	0	Secure
0	1	Non-secure
1	0	Root
1	1	Realm

3.6.2 Configuration

The RME_Support property is used to indicate whether an APB interface supports RME.

True RME is supported. The **PNSE** signal is present on the interface. This can only be used on an APB5 interface.

False RME is not supported. The **PNSE** signal is not present on the interface. If the RME_Support property is not declared on the interface, it is considered False.

If **PNSE** is present on an interface, **PPROT** must also be present.

The **PNSE** signal is parity protected using the **PCTRLCHK** signal.

Table 3-6 lists the compatibility between the Requester and Completer interfaces, according to the values of the RME_Support property.

Table 3-6 RME_Support presence and compatibility

RME_Support	Completer: False	Completer: True
Requester: False	Compatible.	Compatible. Tie the **PNSE** input LOW.
Requester: True	Not compatible.	Compatible.

Copyright © 2003-2023 Arm Ltd. All rights reserved.
Non-Confidential

3.7 Wake-up signaling

This section describes wake-up signaling used in an APB interface.

3.7.1 Introduction

The wake-up signal, **PWAKEUP**, is used to indicate any activity associated with any APB interface. **PWAKEUP** provides a glitch-free signal that can be routed to a clock controller, or similar component, to enable power and clocks to connected components.

The Wakeup_Signal property is used to indicate whether a component supports wake-up signaling:

True Wake-up signal is present.

False Wake-up signal is not present. If the Wakeup_Signal property is not declared, it is considered False.

Wake-up signaling can only be added to APB5 protocol interfaces.

3.7.2 PWAKEUP signaling

Table 3-7 describes the **PWAKEUP** signal.

Table 3-7 PWAKEUP signal description

Signal	Width	Source	Description
PWAKEUP	1	Requester	**PWAKEUP** indicates any activity associated with a Requester interface.

The rules and recommendations for **PWAKEUP** are:

- **PWAKEUP** is synchronous to **PCLK** and must be suitable for sampling asynchronously in a different clock domain. This requires **PWAKEUP** to be glitch-free. This can be achieved, for example, by being generated directly from a register, or from a glitch-free OR tree.
- **PWAKEUP** is allowed to be asserted before, during, or after the assertion of **PSELx**.
- A Completer is permitted to wait for **PWAKEUP** to be asserted, before asserting **PREADY**. The interface could deadlock if **PWAKEUP** is present but never asserted.
- **PWAKEUP** must remain asserted until **PREADY** is asserted if **PWAKEUP** and **PSELx** are HIGH in the same cycle.
- It is recommended that **PWAKEUP** be asserted at least one cycle before the assertion of **PSELx** to prevent the acceptance of a new transaction being delayed.
- It is recommended **PWAKEUP** be deasserted when no further transfers are required.
- It is permitted, but not recommended, asserting **PWAKEUP** then deasserting it without a transfer occurring.
- It is recommended that the Requester and Completer sides of a connection are clock gated together.

  If a Completer interface clock is gated independently of the Requester clock and **PWAKEUP** is used to enable the Completer clock, there is a possibility that the Setup phase of a transfer is missed by the Completer.

Copyright © 2003-2023 Arm Ltd. All rights reserved.
Non-Confidential

3.8 User signaling

This section describes user signaling in an APB interface.

3.8.1 Introduction

The users of APB protocols can encounter an application that requires the addition of signaling that is not specified in the APB protocol. User signaling defines a standard method of adding this signaling to a transaction, without defining the signal usage.

Generally, it is recommended that User signals are not used. The APB protocol interface does not define the function of these signals, causing interoperability problems if two components use the same User signals in an incompatible way.

User signaling can only be added to APB5 protocol interfaces.

3.8.2 Signaling

All signals are optional. If the associated width property is zero, the signal is not present.

Table 3-8 on page 3-30 provides a description of User signals.

Table 3-8 User signal descriptions

Signal	Width	Source	Description
PAUSER	USER_REQ_WIDTH	Requester	User-defined request attribute. • **PAUSER** must be valid when **PSELx** is asserted. • **PAUSER** must have the same value in the Setup and Access phase of a transfer. • **PAUSER** must have the same value in every cycle during the Access phase of a transfer.
PWUSER	USER_DATA_WIDTH	Requester	User-defined write data attribute. • **PWUSER** must be valid when **PSEL** and **PWRITE** are asserted. • **PWUSER** must have the same value in the Setup and Access phases of a transfer. • **PWUSER** must have the same value in every cycle during the Access phase of a transfer.
PRUSER	USER_DATA_WIDTH	Completer	User-defined read data attribute. • **PRUSER** must be valid when **PSEL**, **PENABLE**, and **PREADY** are asserted, and **PWRITE** is deasserted.
PBUSER	USER_RESP_WIDTH	Completer	User-defined response attribute. • **PBUSER** must be valid when **PSEL**, **PENABLE**, and **PREADY** are asserted.

3.8.3 User signal recommendations

Where User signals are implemented, this specification does not require support for all User signals. The width of the User-defined signals is IMPLEMENTATION DEFINED and can be different for request, data, and responses.

It is recommended including provision for all User signals on a domain crossing bridge or interconnect. However, there is no requirement to include them on Completers.

Copyright © 2003-2023 Arm Ltd. All rights reserved.
Non-Confidential

It is recommended USER_DATA_WIDTH is an integer multiple of the width of the data buses in bytes to assist with data width and protocol conversion.

Copyright © 2003-2023 Arm Ltd. All rights reserved.
Non-Confidential

Copyright © 2003-2023 Arm Ltd. All rights reserved.
Non-Confidential

Chapter 4
Operating States

This chapter describes the AMBA APB operating states. It contains the following section:

- *Operating states* on page 4-34

Copyright © 2003-2023 Arm Ltd. All rights reserved.
Non-Confidential

4.1 Operating states

Figure 4-1 shows the operating states of the APB interface.

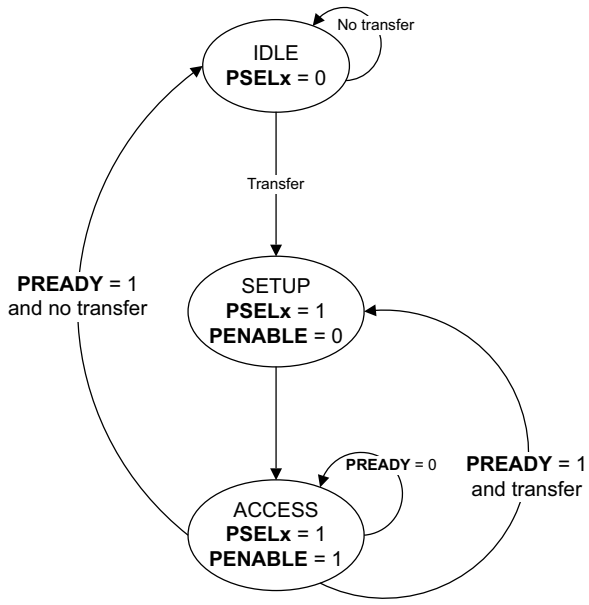

Figure 4-1 State diagram

The state machine operates through the following states:

IDLE This is the default state of the APB interface.

SETUP When a transfer is required, the interface moves into the SETUP state, where the appropriate select signal, **PSELx**, is asserted. The interface only remains in the SETUP state for one clock cycle and always moves to the ACCESS state on the next rising edge of the clock.

ACCESS The enable signal, **PENABLE**, is asserted in the ACCESS state. The following signals must not change in the transition between SETUP and ACCESS and between cycles in the ACCESS state:

- **PADDR**
- **PPROT**
- **PWRITE**
- **PWDATA**, only for write transactions
- **PSTRB**
- **PAUSER**
- **PWUSER**

Exit from the ACCESS state is controlled by the **PREADY** signal from the Completer:

- If **PREADY** is held LOW by the Completer, then the interface remains in the ACCESS state.
- If **PREADY** is driven HIGH by the Completer, then the ACCESS state is exited and the bus returns to the IDLE state if no more transfers are required. Alternatively, the bus moves directly to the SETUP state if another transfer follows.

Copyright © 2003-2023 Arm Ltd. All rights reserved.
Non-Confidential

Chapter 5
Interface parity protection

This chapter describes a parity scheme for detecting single-bit errors on the interface between components. It contains the following sections:

- *Protection using parity* on page 5-36
- *Configuration of interface protection* on page 5-37
- *Parity check* on page 5-38
- *Error detection behavior* on page 5-39
- *Parity check signals* on page 5-40

Copyright © 2003-2023 Arm Ltd. All rights reserved.
Non-Confidential

5.1 Protection using parity

For safety-critical applications, it is necessary to detect and correct transient and functional errors on individual wires within an SoC.

An error in a system component can propagate and cause numerous errors across connected components. *Error Detection and Correction* (EDC) is required to operate end-to-end, covering all logic and wires from source to destination.

One way to implement end-to-end protection is to employ customized EDC schemes in components and implement a simple error detection scheme between components. Between these components, there is no logic and single-bit errors do not propagate to multi-bit errors. This section describes a parity scheme for detecting single-bit errors on the interface between components. Multi-bit errors can be detected if they occur in different parity signal groups.

Figure 5-1 shows the locations where parity can be used.

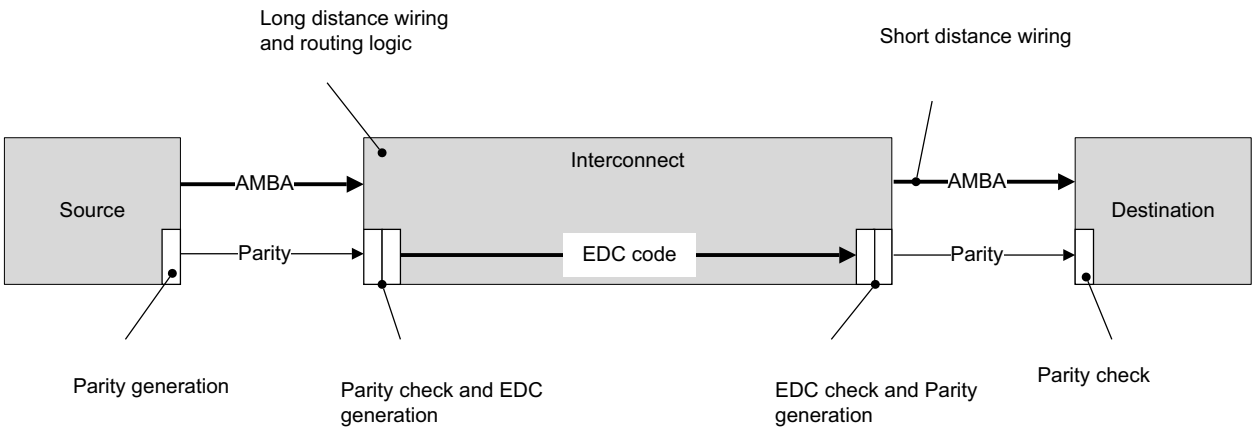

Figure 5-1 Example use of parity protection

Copyright © 2003-2023 Arm Ltd. All rights reserved.
Non-Confidential

5.2 Configuration of interface protection

The EDC scheme of the interface is defined by the Check_Type property. The following Check_Type values are defined:

False

There are no checking signals on the interface.

Odd_Parity_Byte_All

Odd parity checking is included for all signals. Each bit of the parity signal covers up to 8 bits.

If Check_Type is not declared, it is considered to be False.

Check signaling can be added to APB5 interfaces only.

Copyright © 2003-2023 Arm Ltd. All rights reserved.
Non-Confidential

5.3 Parity check

The following attributes are common to the check signals added for byte parity interface protection:

- Odd parity is used. Odd parity means that there is always an odd number of bits asserted across the interface signal and check signal. Check signals are associated with each interface signal.
- Each parity check bit covers no more than 8 bits of payload. This limitation assumes that there is a maximum of three logic levels available in the timing allowance for generating each parity bit.
- Parity signals that cover critical control signals are defined with a single parity bit. The single odd parity bit is the inversion of the original critical control signal. Critical control signals are likely to have a smaller timing allowance available.
- For a check signal that is wider than 1 bit:
  - Check bit `[n]` corresponds to `[(8n+7):8n]` in the payload.
  - If the payload is not an integer number of bytes, the most significant bit of the check signal covers fewer than 8-bits in the most significant portion of the payload.
- Check signals must be driven correctly in every cycle that the Check Enable term is True. See Table 5-1 on page 5-40.
- Parity signals must be driven appropriately to all the bits in the associated payload, whether or not the bits are actively used in the transfer. For example, all bits of **PWDATACHK** must be driven correctly, even if some bytes are not valid data bytes.
- If some of the signals covered by a check signal are not present on an interface, then the missing signals are assumed to be LOW.
- If none of the signals covered by a check signal are present on an interface, then the check signal is omitted from the interface.

Copyright © 2003-2023 Arm Ltd. All rights reserved.
Non-Confidential

5.4 Error detection behavior

This specification is not prescriptive regarding component or system behavior when a parity error is detected. Depending on the system and affected signals, a flipped bit can have a wide range of effects. It might be harmless, cause performance issues, cause data corruption, cause security violations, or deadlock.

When an error is detected, the Completer can:

- Terminate or propagate the transfer.
- Correct the parity check signal or propagate the error.
- Update its memory or leave untouched.
- Signal an error response through other means, for example with an interrupt.

Copyright © 2003-2023 Arm Ltd. All rights reserved.
Non-Confidential

5.5 Parity check signals

Check signals are synchronous to **PCLK** and must be driven correctly every cycle in which the Check Enable term is True.

Table 5-1 shows the parity check signals.

Table 5-1 Check signal descriptions

Check signal	Signals covered	Width	Granularity	Check Enable
PADDRCHK	**PADDR**	`ceil(ADDR_WIDTH/8)`[a]	1-8	**PSEL**
PCTRLCHK	**PPROT, PWRITE, PNSE**	1	1-5	**PSEL**
PSELxCHK[b]	**PSELx**	1	1	**PRESETn**
PENABLECHK	**PENABLE**	1	1	**PSEL**
PWDATACHK	**PWDATA**	DATA_WIDTH/8	8	**PSEL** & **PWRITE**
PSTRBCHK	**PSTRB**	1	1-4	**PSEL** & **PWRITE**
PREADYCHK	**PREADY**	1	1	**PSEL** & **PENABLE**
PRDATACHK	**PRDATA**	DATA_WIDTH/8	8	**PSEL** & **PENABLE** & **PREADY** & **!PWRITE**
PSLVERRCHK	**PSLVERR**	1	1	**PSEL** & **PENABLE** & **PREADY**
PWAKEUPCHK	**PWAKEUP**	1	1	**PRESETn**
PAUSERCHK	**PAUSER**	`ceil(USER_REQ_WIDTH/8)`	1-8	**PSEL**
PWUSERCHK	**PWUSER**	`ceil(USER_DATA_WIDTH/8)`	1-8	**PSEL** & **PWRITE**
PRUSERCHK	**PRUSER**	`ceil(USER_DATA_WIDTH/8)`	1-8	**PSEL** & **PENABLE** & **PREADY** & **!PWRITE**
PBUSERCHK	**PBUSER**	`ceil(USER_RESP_WIDTH/8)`	1-8	**PSEL** & **PENABLE** & **PREADY**

a. The function `ceil()` returns the lowest integer value that is equal to or greater than the input to the function.

b. There is a separate check signal per **PSEL** signal as only one **PSEL** bit is routed to each Completer.

Copyright © 2003-2023 Arm Ltd. All rights reserved.
Non-Confidential

Appendix A
Signal validity

This appendix summarizes the rules describing when signals must be valid.

Copyright © 2003-2023 Arm Ltd. All rights reserved.
Non-Confidential

A.1 Validity rules

The following signals must always be valid:

- **PSEL**
- **PWAKEUP**

The following signals must be valid when **PSEL** is asserted:

- **PADDR**
- **PPROT**
- **PNSE**
- **PENABLE**
- **PWRITE**
- **PAUSER**
- **PSTRB**
- **PWDATA**, active write data lanes only
- **PWUSER**, write only

The following signal must be valid when **PSEL** and **PENABLE** are asserted:

- **PREADY**

The following signals must be valid when **PSEL**, **PENABLE**, and **PREADY** are asserted:

- **PRDATA**, read only
- **PSLVERR**
- **PRUSER**, read only
- **PBUSER**

It is recommended that signals which are not required to be valid are driven to zero.

Copyright © 2003-2023 Arm Ltd. All rights reserved.
Non-Confidential

Appendix B
Signal list

This appendix provides a summary of all signals on the APB interface.

Copyright © 2003-2023 Arm Ltd. All rights reserved.
Non-Confidential

B.1 APB signals

Table B-1 describes the list of the APB signals. Table B-2 describes the list of APB check signals. Optional signals have a default that should be used for any un-driven inputs.

The following codes used in Table B-1 and Table B-2 are:

Y Mandatory
N Must not be present
O Optional for inputs and outputs
OO Optional for output ports, mandatory for inputs
C Conditional, must be present if the property is True
OC Optional conditional, optional but can only be present if the property is True

Table B-1 APB signals

Signal	Width	Default	Property	APB5	APB4	APB3	APB2
PCLK	1	-	-	Y	Y	Y	Y
PRESETn	1	-	-	Y	Y	Y	Y
PADDR	ADDR_WIDTH	-	-	Y	Y	Y	Y
PPROT	3	`0b000`	-	O	O	N	N
PNSE	1	`0b0`	RME_Support	C	N	N	N
PSELx	1	-	-	Y	Y	Y	Y
PENABLE	1	-	-	Y	Y	Y	Y
PWRITE	1	-	-	Y	Y	Y	Y
PWDATA	DATA_WIDTH	-	-	Y	Y	Y	Y
PSTRB	DATA_WIDTH/8	-	-	O	O	N	N
PREADY	1	`0b1`	-	OO	OO	OO	N
PRDATA	DATA_WIDTH	-	-	Y	Y	Y	Y
PSLVERR	1	`0b0`	-	OO	OO	OO	N
PWAKEUP	1	-	Wakeup_Signal	C	N	N	N
PAUSER	USER_REQ_WIDTH	-	USER_REQ_WIDTH	OC	N	N	N
PWUSER	USER_DATA_WIDTH	-	USER_DATA_WIDTH	OC	N	N	N
PRUSER	USER_DATA_WIDTH	-	USER_DATA_WIDTH	OC	N	N	N
PBUSER	USER_RESP_WIDTH	-	USER_RESP_WIDTH	OC	N	N	N

Table B-2 Check signal

Signal	Width	Property	APB5	APB4	APB3	APB2
PADDRCHK	ADDR_WIDTH/8	Check_Type	C	N	N	N
PCTRLCHK	1	Check_Type	C	N	N	N
PSELxCHK	1	Check_Type	C	N	N	N
PENABLECHK	1	Check_Type	C	N	N	N

Copyright © 2003-2023 Arm Ltd. All rights reserved.
Non-Confidential

Table B-2 Check signal (continued)

Signal	Width	Property	APB5	APB4	APB3	APB2
PWDATACHK	DATA_WIDTH/8	Check_Type	C	N	N	N
PSTRBCHK	1	Check_Type	C	N	N	N
PREADYCHK	1	Check_Type	C	N	N	N
PRDATACHK	DATA_WIDTH/8	Check_Type	C	N	N	N
PSLVERRCHK	1	Check_Type	OC	N	N	N
PWAKEUPCHK	1	Check_Type & Wakeup_Signal	C	N	N	N
PAUSERCHK	`ceil(USER_REQ_WIDTH/8)`	Check_Type & USER_REQ_WIDTH	OC	N	N	N
PWUSERCHK	`ceil(USER_DATA_WIDTH/8)`	Check_Type & USER_DATA_WIDTH	OC	N	N	N
PRUSERCHK	`ceil(USER_DATA_WIDTH/8)`	Check_Type & USER_DATA_WIDTH	OC	N	N	N
PBUSERCHK	`ceil(USER_RESP_WIDTH/8)`	Check_Type & USER_RESP_WIDTH	OC	N	N	N

Table B-3 shows the interface properties.

If an entry is not Y, the property must be False or undeclared for that interface type.

Table B-3 Interface properties

Property	Issue introduced	APB5	APB4	APB3	APB2
Check_Type	D	Y	-	-	-
USER_DATA_WIDTH	D	Y	-	-	-
USER_REQ_WIDTH	D	Y	-	-	-
USER_RESP_WIDTH	D	Y	-	-	-
Wakeup_Signal	D	Y	-	-	-

Copyright © 2003-2023 Arm Ltd. All rights reserved.
Non-Confidential

Copyright © 2003-2023 Arm Ltd. All rights reserved.
Non-Confidential

Appendix C
Revisions

This appendix describes the technical changes between released issues of this book.

Table C-1 Issue A

Change	Location
First release	-

Table C-2 Differences between issue A and issue B

Change	Location
APB signal **PREADY** added	• Table 2-1 on page 2-16 • *Write transfers* on page 3-20 • *Read transfers* on page 3-23 • *Error response* on page 3-25 • Chapter 4 *Operating States*
APB signal **PSLVERR** added	• Table 2-1 on page 2-16 • *Error response* on page 3-25

Copyright © 2003-2023 Arm Ltd. All rights reserved.
Non-Confidential

Table C-3 Differences between issue B and issue C

Change	Location
Section added listing the changes made to this specification at each revision of the document.	Appendix C *Revisions*
APB signal **PPROT** added	• Table 2-1 on page 2-16 • *Protection unit support* on page 3-27
APB signal **PSTRB** added	• Table 2-1 on page 2-16 • *Write strobes* on page 3-22

Table C-4 Changes from Issue C to Issue D

Change	Location
Added signal width properties	*AMBA APB signals* on page 2-16
Added wake-up signaling	*Wake-up signaling* on page 3-29
Added user signaling	*User signaling* on page 3-30
Added interface parity	Chapter 5 *Interface parity protection*
Included regularized terminology using Completer and Requester	Throughout the specification
Added signal validity rules	Appendix A *Signal validity*
Added signal matrix	Appendix B *Signal list*

Table C-5 Changes from Issue D to Issue E

Change	Location
Support for RME	*Realm Management Extension, RME* on page 3-28

Copyright © 2003-2023 Arm Ltd. All rights reserved.
Non-Confidential