WMDL_V5.1

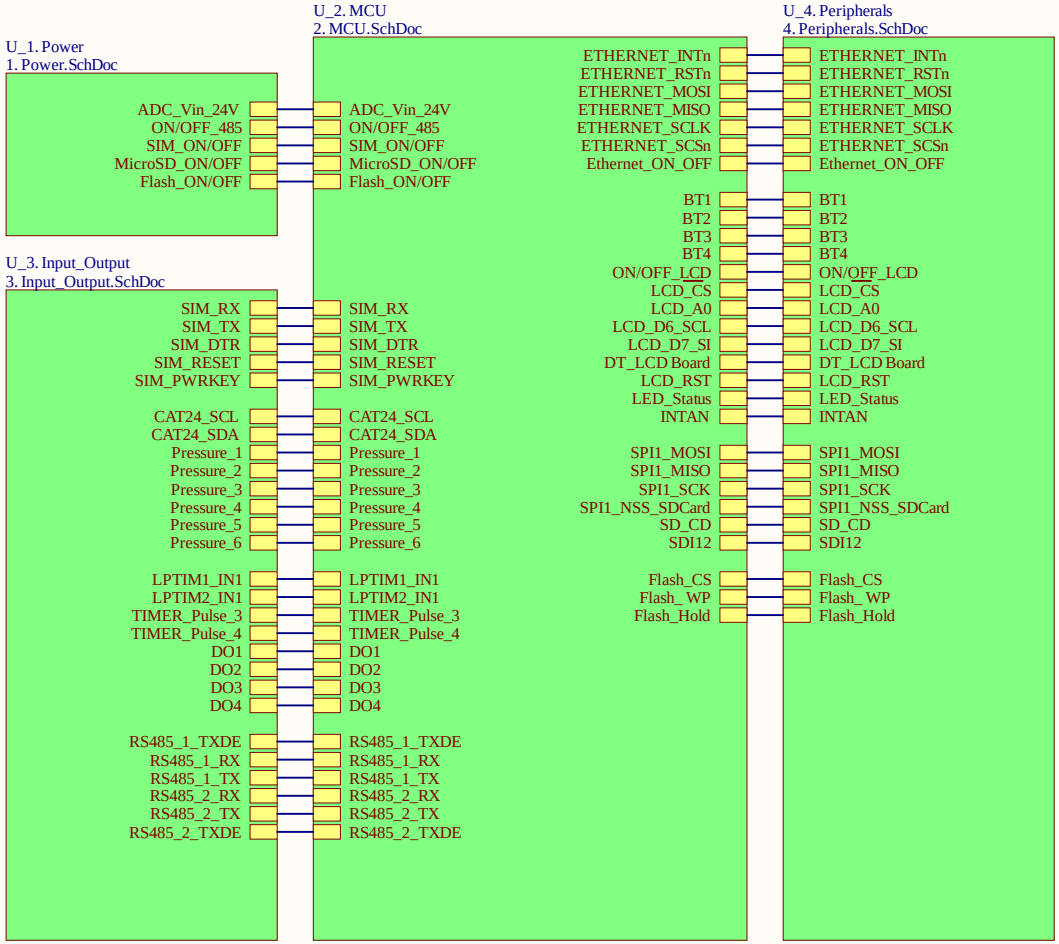

Title		
Size A4	Number	Revision
Date: 6/15/2026		Sheet of
File: D:\1 Huy Hoang\..\0.Block.SchDoc		Drawn By:

WMDL_V5.1

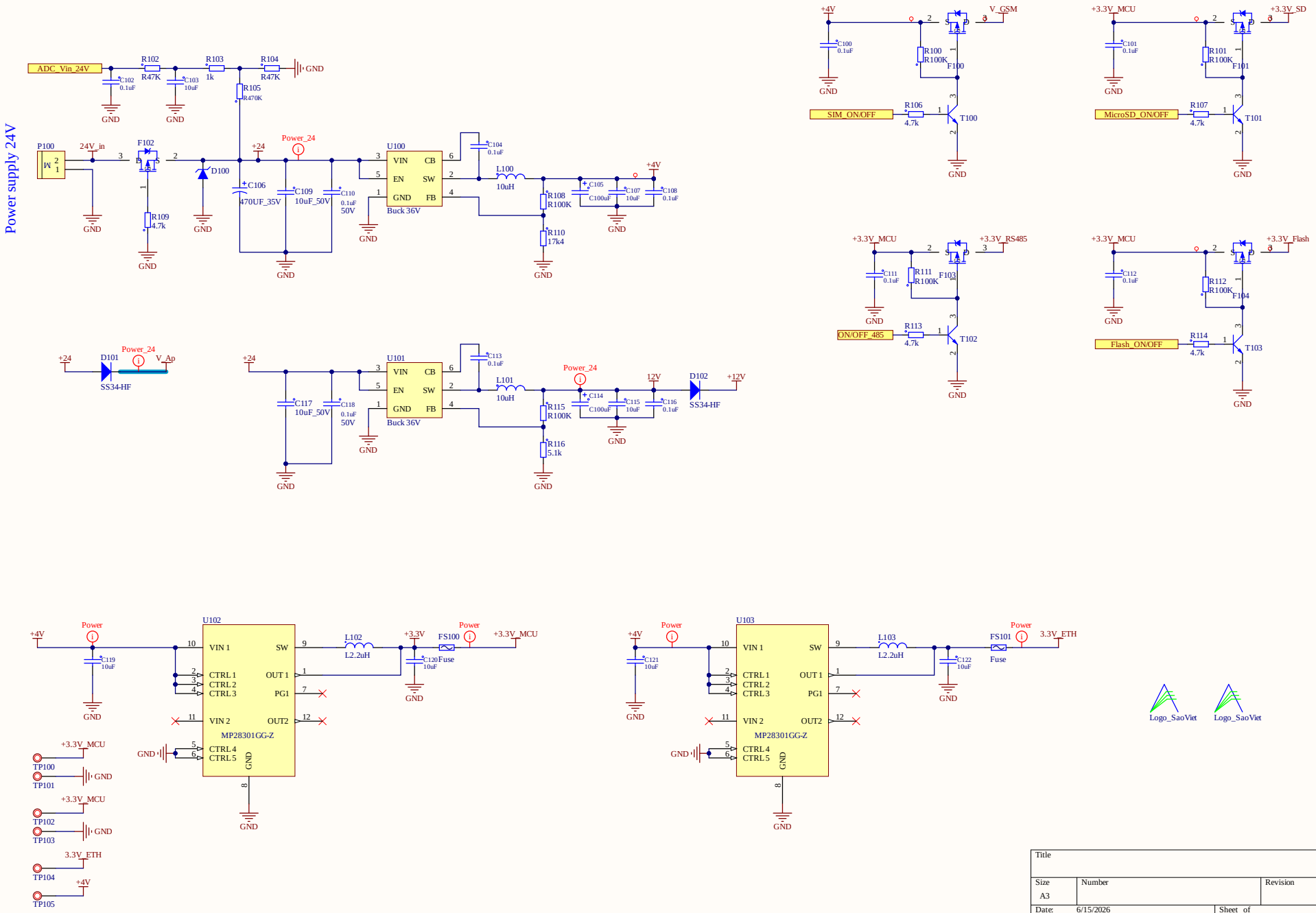

Title		
Size A3	Number	Revision
Date: 6/15/2026		Sheet of
File: D:\1 Huy Hoang\..\1. Power.SchDoc		Drawn By:

WMDL_V5.1

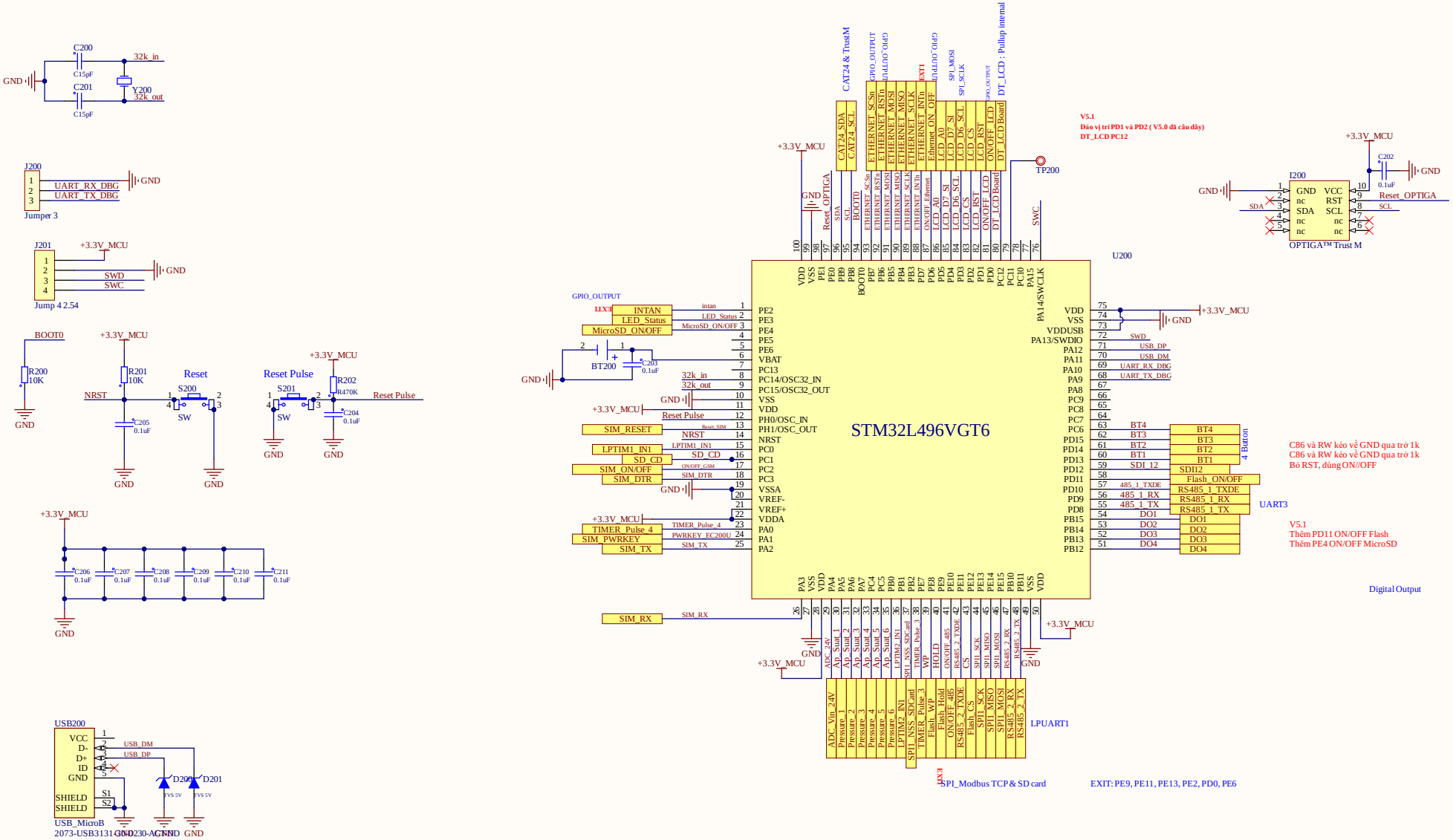

Title		
Size A3	Number	Revision
Date: 6/15/2026		Sheet of
File: D:\1 Huy Hoang\..\2. MCU.SchDoc		Drawn By:

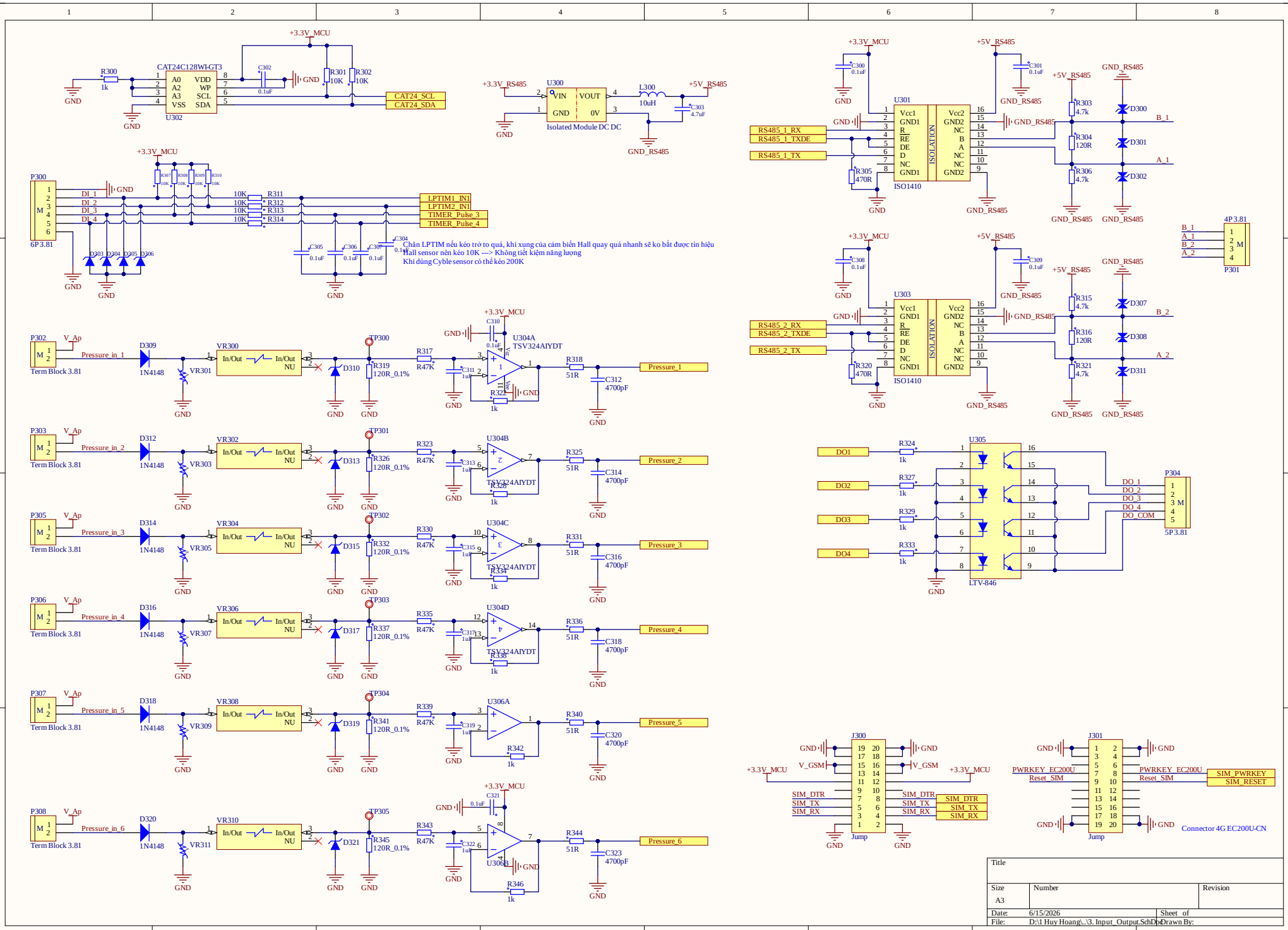
CAT24C128WI-GT3
U302
R300 1k
R301 10K
R302 10K
C302 0.1uF
+3.3V_MCU
GND
CAT24_SCL
CAT24_SDA
U300
Isolated Module DC DC
+3.3V_RS485
+5V_RS485
L300 10uH
C303 4.7uF
GND_RS485
P300
6P 3.81
DI_1
DI_2
DI_3
DI_4
R311
R312
R313
R314
LPTIM1_IN1
LPTIM2_IN1
TIMER_Pulse_3
TIMER_Pulse_4
Chân LPTIM nếu kéo trở to quá, khi xung của cảm biến Hall quay quá nhanh sẽ ko bắt được tín hiệu
Hall sensor nên kéo 10K ---> Không tiết kiệm năng lượng
Khi dùng Cyble sensor có thể kéo 200K
U301
U303
ISO1410
ISOLATION
RS485_1_RX
RS485_1_TXDE
RS485_1_TX
RS485_2_RX
RS485_2_TXDE
RS485_2_TX
R305 470R
R320 470R
R303 4.7k
R304 120R
R306 4.7k
R315 4.7k
R316 120R
R321 4.7k
D300
D301
D302
D307
D308
D311
B_1
A_1
B_2
A_2
P301
4P 3.81
P302
P303
P305
P306
P307
P308
Term Block 3.81
V_Ap
Pressure_in_1
Pressure_in_2
Pressure_in_3
Pressure_in_4
Pressure_in_5
Pressure_in_6
D309
D312
D314
D316
D318
D320
1N4148
VR300
VR302
VR304
VR306
VR308
VR310
In/Out
NU
TP300
TP301
TP302
TP303
TP304
TP305
R317 R47K
R319 120R_0.1%
R318 51R
C312 4700pF
U304A
U304B
U304C
U304D
U306A
U306B
TSV324AIYDT
R322 1k
R325 51R
C314 4700pF
R326 120R_0.1%
R330 R47K
R332 120R_0.1%
R331 51R
C316 4700pF
R334 1k
R335 R47K
R337 120R_0.1%
R336 51R
C318 4700pF
R339 R47K
R341 120R_0.1%
R340 51R
C320 4700pF
R342 1k
R343 R47K
R345 120R_0.1%
R344 51R
C323 4700pF
R346 1k
Pressure_1
Pressure_2
Pressure_3
Pressure_4
Pressure_5
Pressure_6
DO1
DO2
DO3
DO4
R324 1k
R327 1k
R329 1k
R333 1k
U305
LTV-846
P304
5P 3.81
DO_1
DO_2
DO_3
DO_4
DO_COM
J300
Jump
V_GSM
SIM_DTR
SIM_TX
SIM_RX
J301
PWRKEY_EC200U
Reset_SIM
SIM_PWRKEY
SIM_RESET
Connector 4G EC200U-CN
Title
Size
A3
Number
Revision
Date: 6/15/2026
Sheet of
File: D:\1 Huy Hoang\..\3. Input_Output.SchDoc
Drawn By:

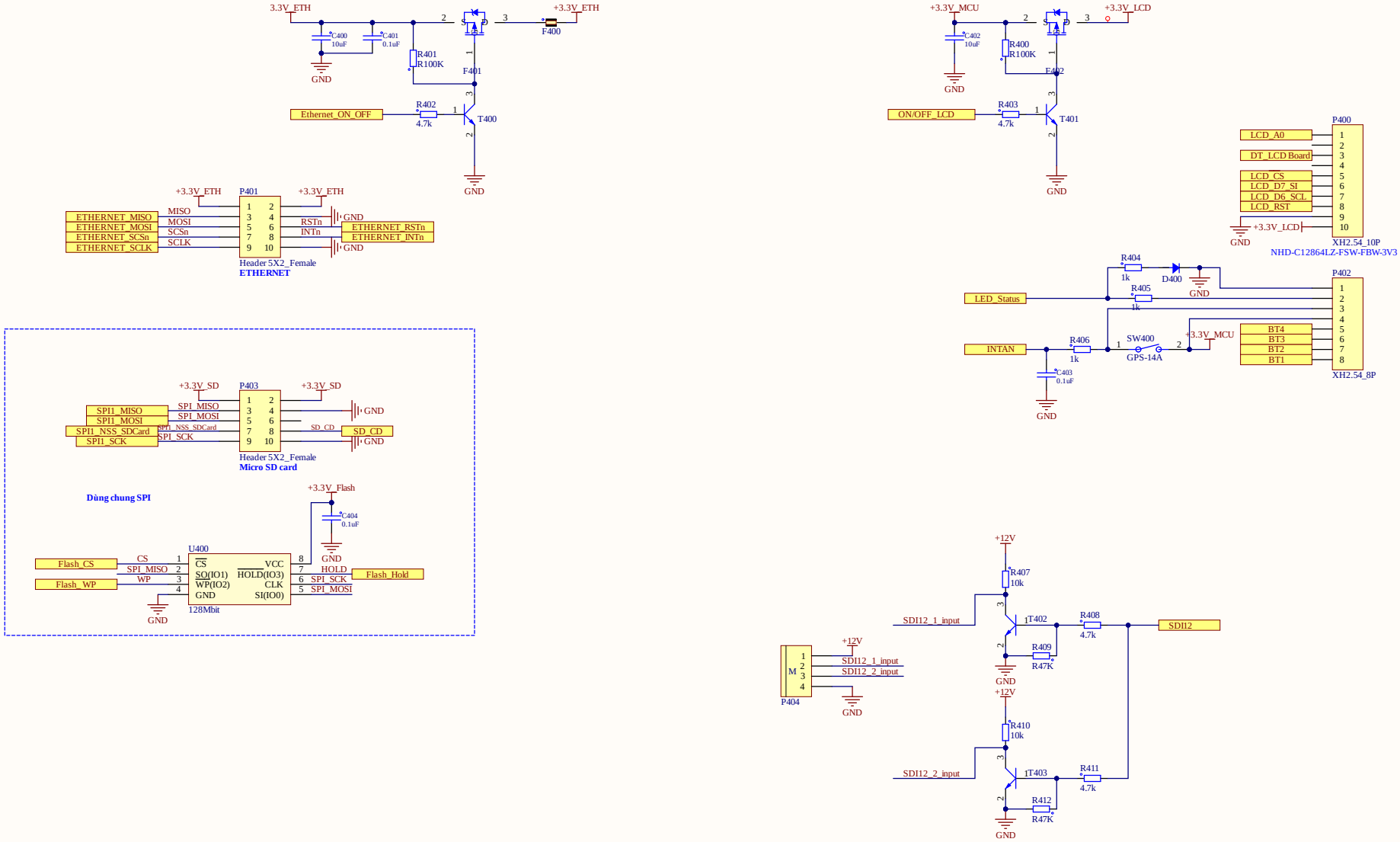

Title		
Size A3	Number	Revision
Date: 6/15/2026	Sheet of	
File: D:\1 Huy Hoang\..\4. Peripherals.SchDoc	Drawn By:	

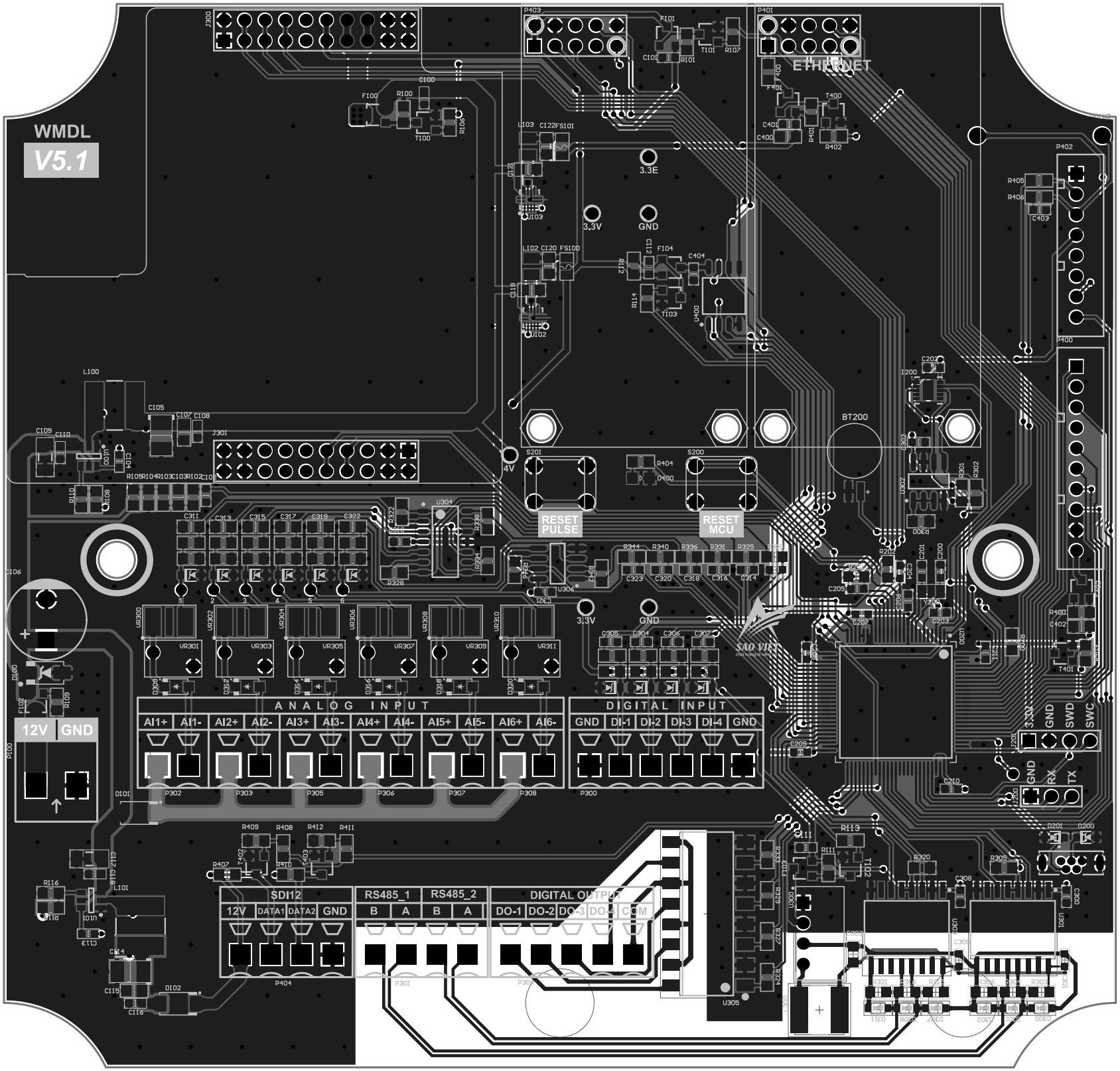
WMDL
V5.1
ETHERNET
RESET PULSE
RESET MCU
BT200
3.3E
3.3V
GND
4V
12V
GND
ANALOG INPUT
AI1+
AI1-
AI2+
AI2-
AI3+
AI3-
AI4+
AI4-
AI5+
AI5-
AI6+
AI6-
DIGITAL INPUT
GND
DI-1
DI-2
DI-3
DI-4
GND
3.3V
GND
SWD
SWC
GND
RX
TX
SDI12
12V
DATA1
DATA2
GND
RS485_1
B
A
RS485_2
B
A
DIGITAL OUTPUT
DO-1
DO-2
DO-3
DO-4
COM
SAO VIET

Keyword	Description	Designator	Footprint	Manufacturer Part Number	Quantity
BATTLFHUM3V-SUMIDA CD95	Sim, 6.8mm 3V Surface Battery Holder Sumida(Hong Kong) CD-3V6S	BT300	BAT_MINI3HR-R-L18	MINI3HR-R-L18	1
C-1uF	Multi-Layer Ceramic Capacitor (MLCC) / Cap Ceramic 0.1uF 50V 10% X8R Pad SMD 0805 [VALUE, TYP	C1000, C1005, C1030, C1031, C1032, C1033, C1034, C1035, C1036, C1037, C1038, C1039, C1040, C1041, C1042, C1043, C1044, C1045, C1046, C1047, C1048, C1049, C1050, C1051, C1052, C1053, C1054, C1055, C1056, C1057, C1058, C1059, C1060, C1061, C1062, C1063, C1064, C1065, C1066, C1067, C1068, C1069,