WMGE_V5.0

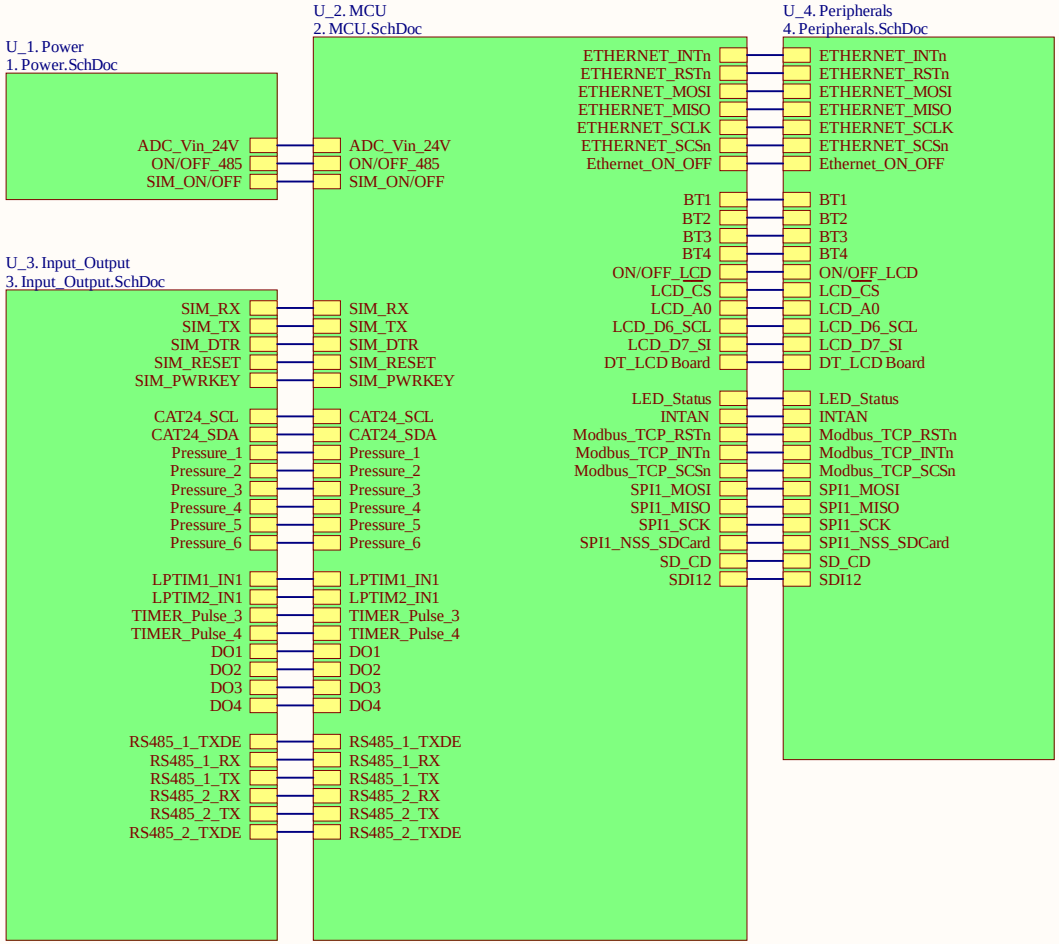

Title		
Size A4	Number	Revision
Date: 1/12/2026		Sheet of
File: D:\1 Huy Hoang\..\0.Block.SchDoc		Drawn By:

WMGE_V4.1.0

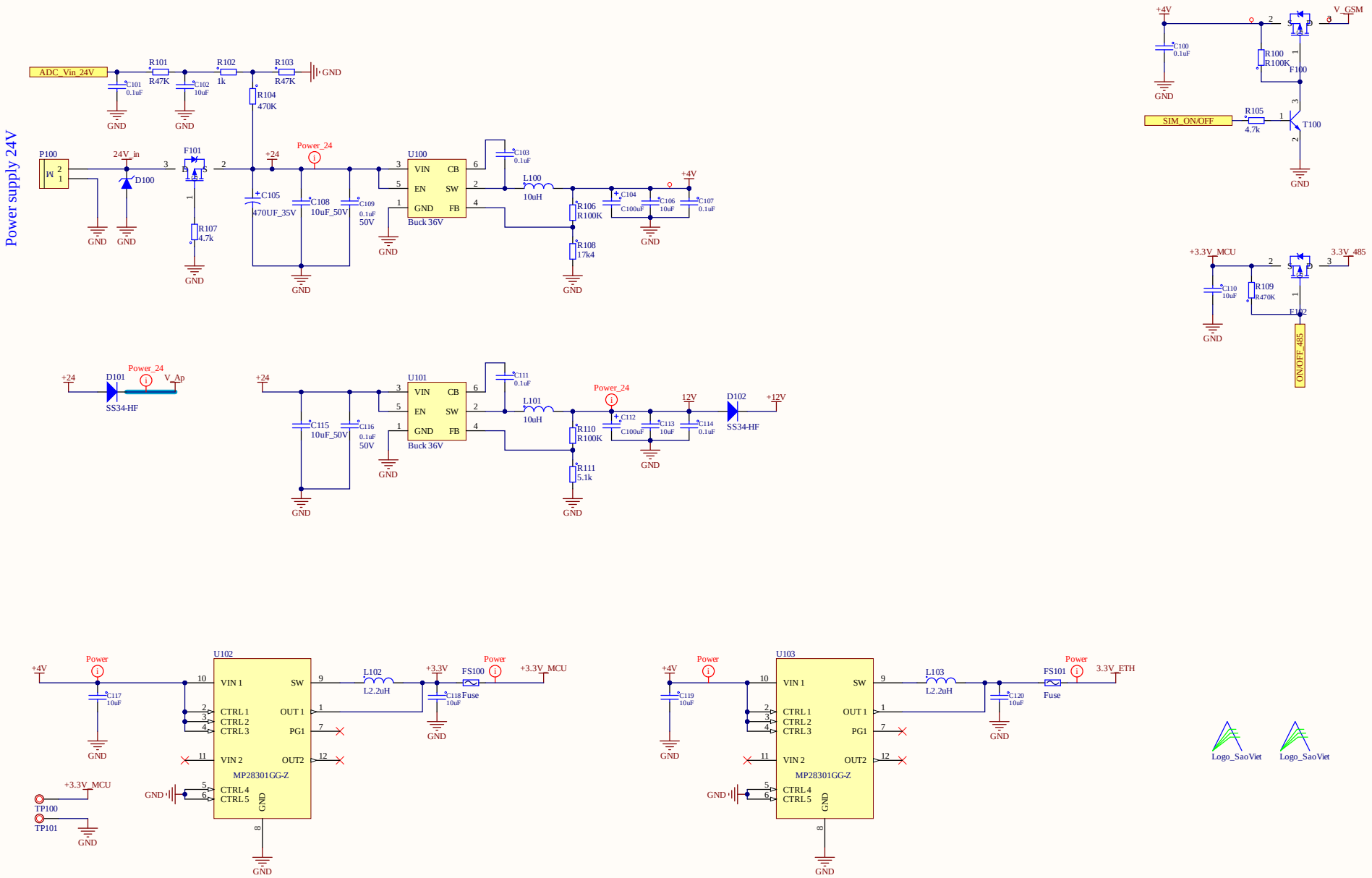

Title		
Size A3	Number	Revision
Date: 1/12/2026		Sheet of
File: D:\1 Huy Hoang\..\1. Power.SchDoc		Drawn By:

WMGE_V4.1.0

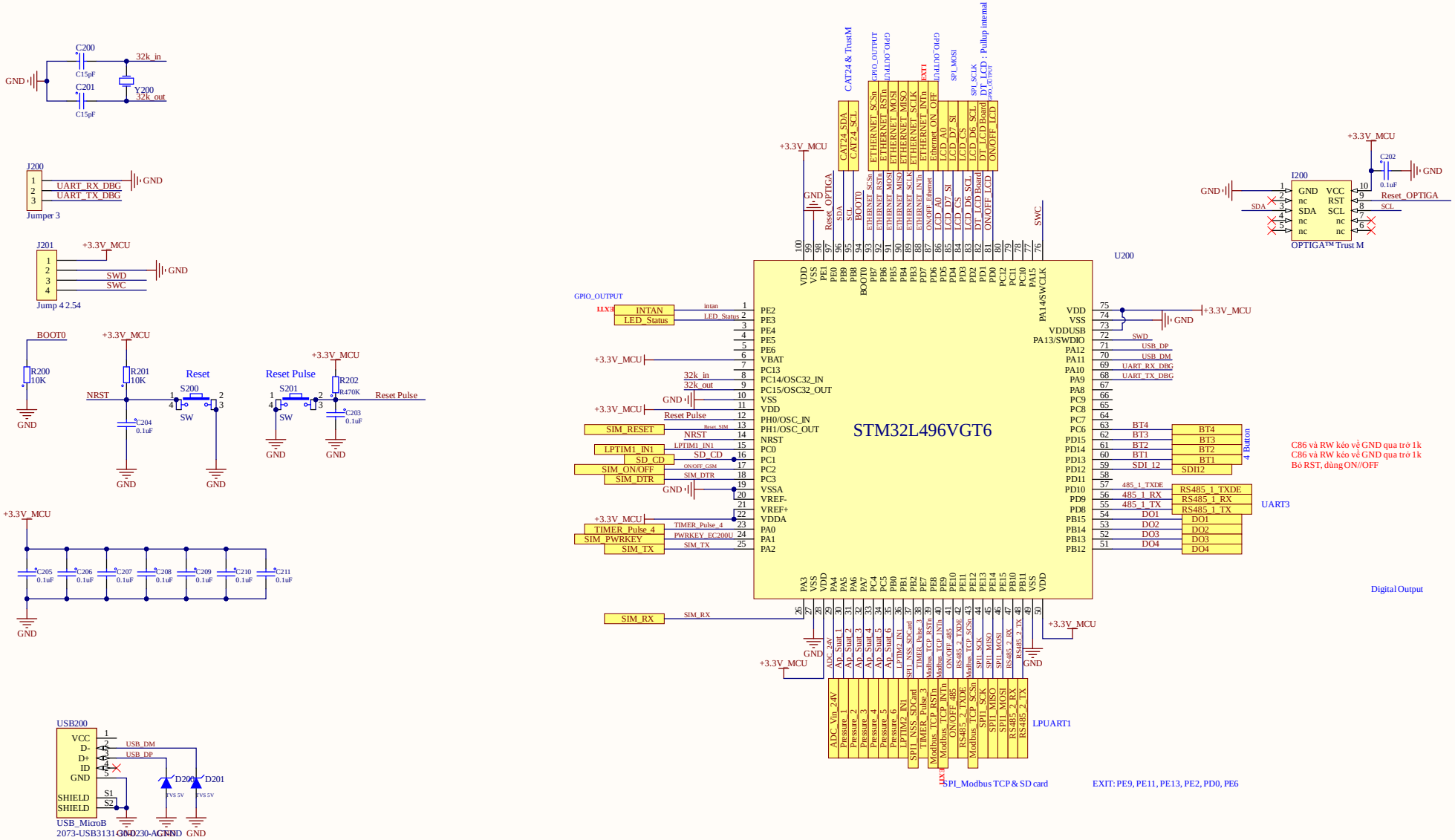

Title		
Size A3	Number	Revision
Date: 1/12/2026		Sheet of
File: D:\1 Huy Hoang\..\2. MCU.SchDoc		Drawn By:

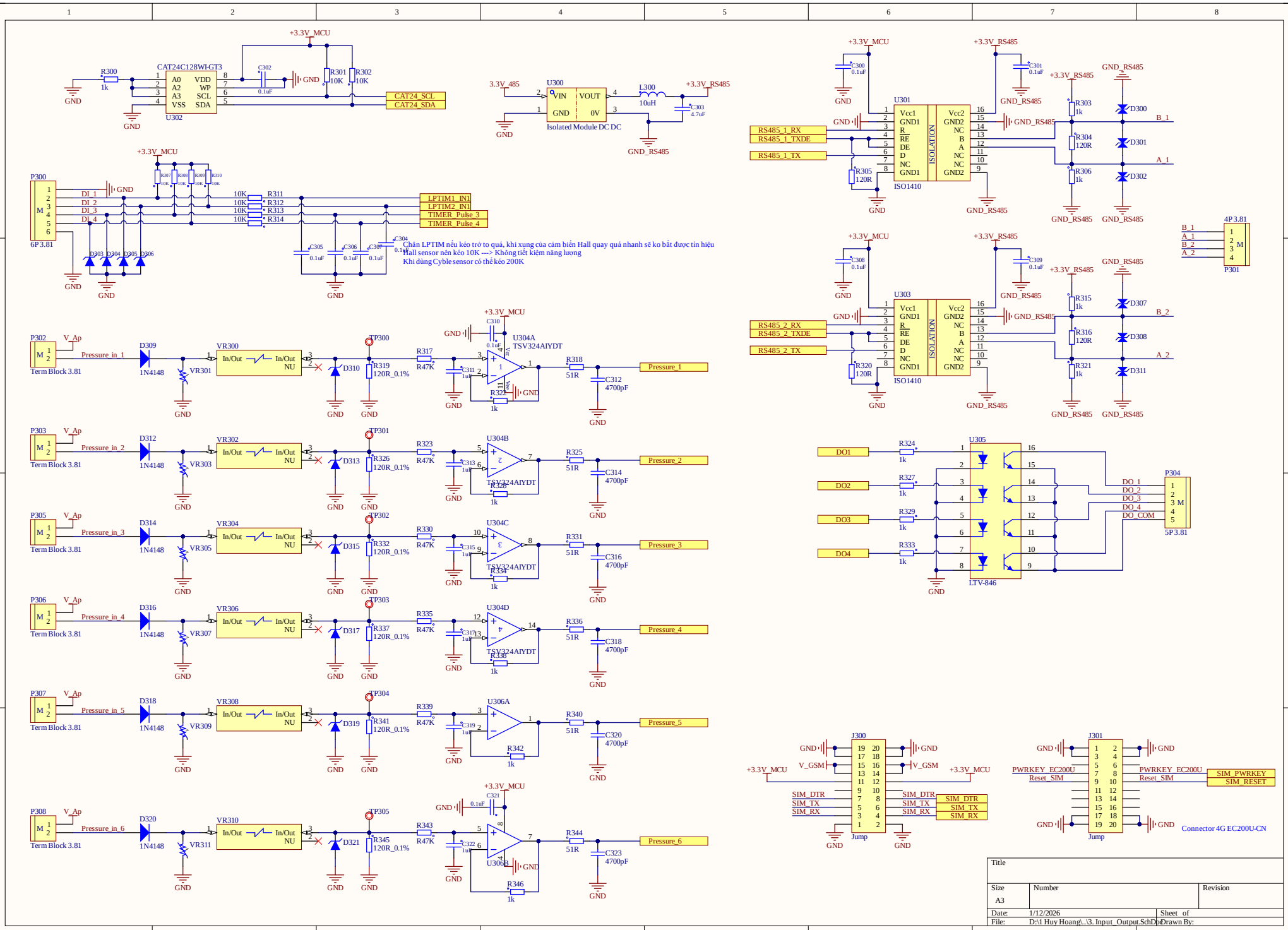
CAT24C128WI-GT3
U302
R300 1k
R301 10K
R302 10K
C302 0.1uF
+3.3V_MCU
GND
CAT24_SCL
CAT24_SDA
U300
VIN VOUT GND 0V
Isolated Module DC DC
3.3V_485
L300 10uH
C303 4.7uF
+3.3V_RS485
GND_RS485
P300
6P 3.81
DI_1
DI_2
DI_3
DI_4
D303 D304 D305 D306
R311 R312 R313 R314
LPTIM1_IN1
LPTIM2_IN1
TIMER_Pulse_3
TIMER_Pulse_4
C305 C306 C307 C304 0.1uF
Chân LPTIM nếu kéo trở to quá, khi xung của cảm biến Hall quay quá nhanh sẽ ko bắt được tín hiệu
Hall sensor nên kéo 10K ---> Không tiết kiệm năng lượng
Khi dùng Cyble sensor có thể kéo 200K
U301
U303
Vcc1 GND1 R RE DE D NC GND1
Vcc2 GND2 NC B A NC NC GND2
ISOLATION
ISO1410
RS485_1_RX
RS485_1_TXDE
RS485_1_TX
RS485_2_RX
RS485_2_TXDE
RS485_2_TX
R305 120R
R306 1k
R303 1k
R304 120R
R320 120R
R321 1k
R315 1k
R316 120R
D300 D301 D302
D307 D308 D311
B_1
A_1
B_2
A_2
4P 3.81
P301
P302 P303 P305 P306 P307 P308
V_Ap
Pressure_in_1
Pressure_in_2
Pressure_in_3
Pressure_in_4
Pressure_in_5
Pressure_in_6
Term Block 3.81
D309 D312 D314 D316 D318 D320
1N4148
VR300 VR302 VR304 VR306 VR308 VR310
In/Out NU
VR301 VR303 VR305 VR307 VR309 VR311
D310 D313 D315 D317 D319 D321
TP300 TP301 TP302 TP303 TP304 TP305
R319 120R_0.1%
R326 120R_0.1%
R332 120R_0.1%
R337 120R_0.1%
R341 120R_0.1%
R345 120R_0.1%
R317 R323 R330 R335 R339 R343 R47K
U304A U304B U304C U304D U306A U306B
TSV324AIYDT
R318 R325 R331 R336 R340 R344 51R
C312 C314 C316 C318 C320 C323 4700pF
Pressure_1
Pressure_2
Pressure_3
Pressure_4
Pressure_5
Pressure_6
DO1 DO2 DO3 DO4
R324 R327 R329 R333 1k
U305
LTV-846
P304
5P 3.81
DO_1
DO_2
DO_3
DO_4
DO_COM
J300
Jump
V_GSM
SIM_DTR
SIM_TX
SIM_RX
J301
PWRKEY_EC200U
Reset_SIM
SIM_PWRKEY
SIM_RESET
Connector 4G EC200U-CN
Title
Size A3
Number
Revision
Date: 1/12/2026
Sheet of
File: D:\1 Huy Hoang\..\3. Input_Output.SchDoc
Drawn By:

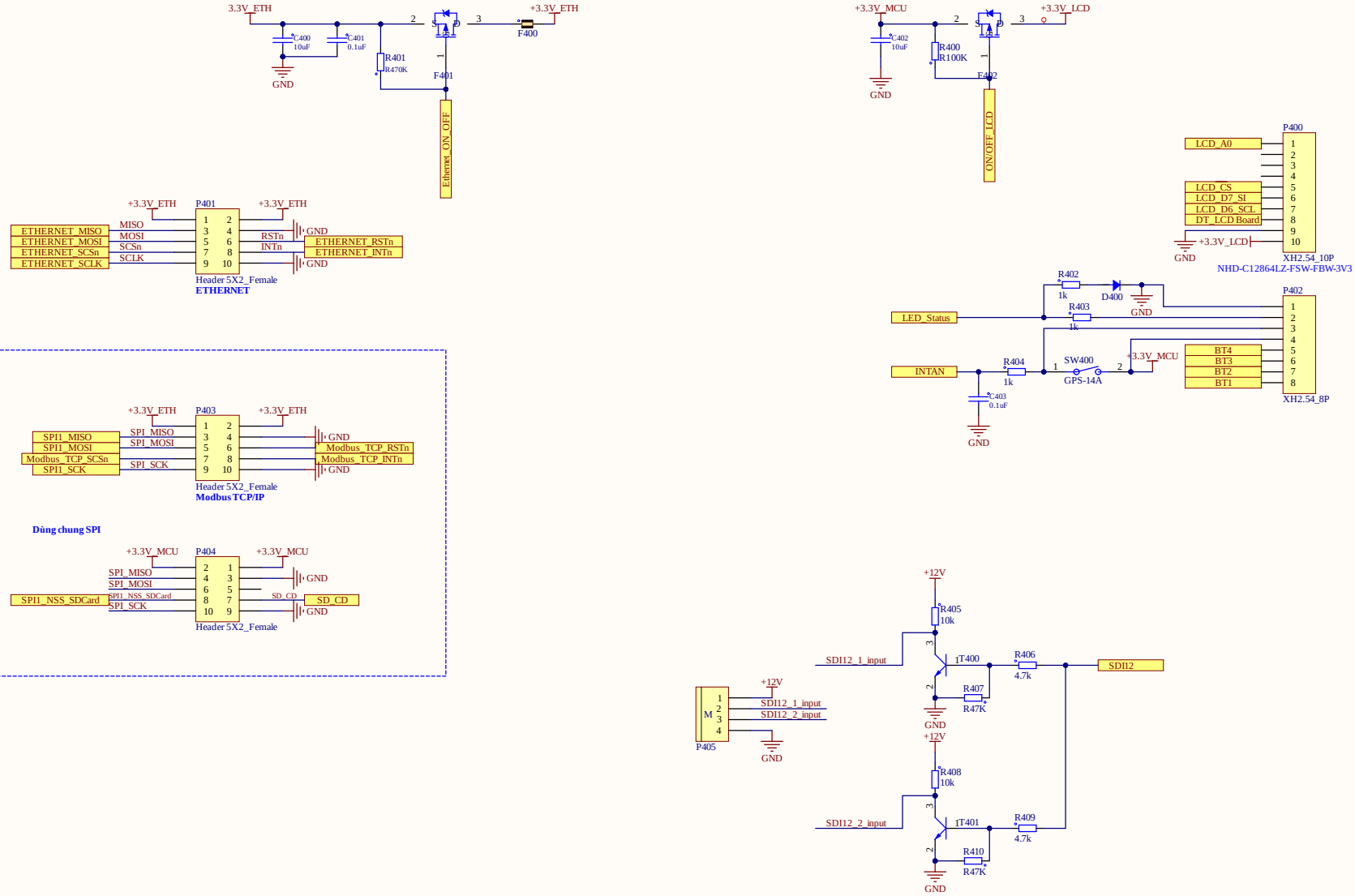

Title		
Size A3	Number	Revision
Date: 1/12/2026	Sheet of	
File: D:\1 Huy Hoang\..\4. Peripherals.SchDoc	Drawn By:	

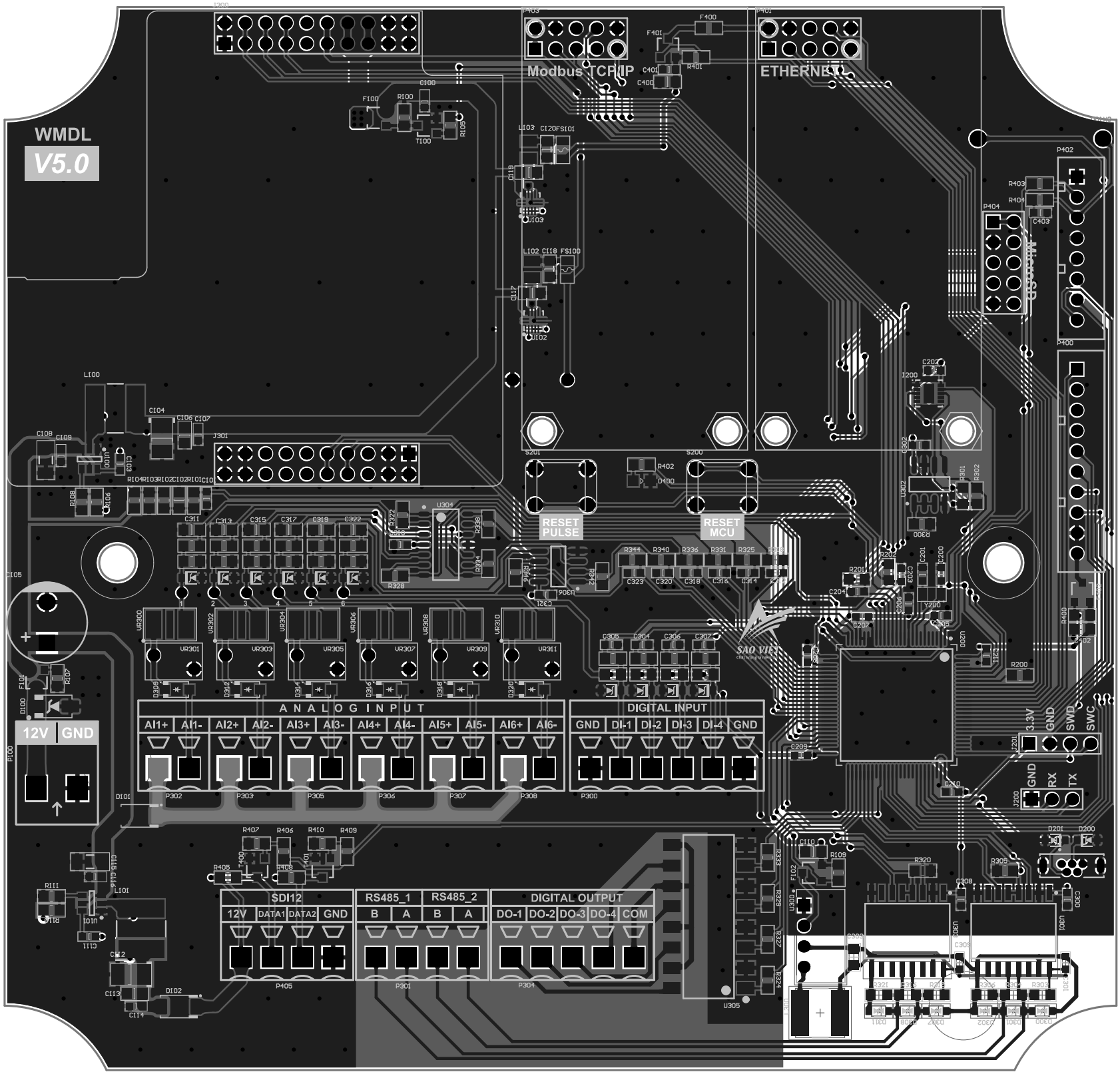
WMDL
V5.0
Modbus TCP/IP
ETHERNET
RESET PULSE
RESET MCU
ANALOG INPUT
AI1+ AI1- AI2+ AI2- AI3+ AI3- AI4+ AI4- AI5+ AI5- AI6+ AI6-
DIGITAL INPUT
GND DI-1 DI-2 DI-3 DI-4 GND
12V GND
3.3V GND SWD SWC
GND RX TX
SDI12
12V DATA1 DATA2 GND
RS485_1
B A
RS485_2
B A
DIGITAL OUTPUT
DO-1 DO-2 DO-3 DO-4 COM

Comment	Description	Designator	Footprint	Manufacturer Part Number	Quantity
0.1uF	Multi-Layer Ceramic Capacitor (MLCC) Cap Ceramic 0.1uF 50V X7R 10% Pad SMD 0805 125,85 °C	C102, C201, C203, C204, C205, C206, C214, C216, C303, C305, C306, C307, C308, C309, C310, C311, C312, C313, C314, C315, C316, C317, C318, C319, C320, C321, C322, C323, C324, C325, C326, C327, C328, C329, C330, C331, C332, C333, C334, C335, C336, C337, C338, C339, C340, C341, C342, C343, C344,