PHYS 311 Homework Set 3

1. $T(x,y,z) = 3z^2 + 4xz + yz^3$, $d\vec{l} = dx\hat{x} + dy\hat{y} + dz\hat{z}$

NOW

$$\vec{\nabla}T = \hat{x}\frac{\partial}{\partial x}T + \hat{y}\frac{\partial T}{\partial y} + \hat{z}\frac{\partial T}{\partial z} = \hat{x}(4z) + \hat{y}(z^3) + \hat{z}(6z + 4x + 3yz^2)$$

so $\vec{\nabla}T \cdot d\vec{l} = 4z\,dx + z^3 dy + (6z + 4x + 3yz^2)\,dz$

a) ALONG $(0,0,0) \to (1,0,0)$ $\therefore$ $y = z = 0$ $\therefore$ $dy = dz = 0$

so $\vec{\nabla}T \cdot d\vec{l}\Big|_{\substack{y=z=0\\ dy=dz=0}} = 4z\,dx\Big|_{z=0} = 0$ so $\displaystyle\int_{(0,0,0)}^{(1,0,0)} \vec{\nabla}T \cdot d\vec{l} = 0$

ALONG $(1,0,0) \to (1,1,0)$ $\therefore$ $z = 0, x = 1$ $\therefore$ $dz = dx = 0$

so $\vec{\nabla}T \cdot d\vec{l}\Big|_{\substack{z=0,\,x=1\\ dz=dx=0}} = z^3 dy\Big|_{z=0} = 0$ so $\displaystyle\int_{(1,0,0)}^{(1,1,0)} \vec{\nabla}T \cdot d\vec{l} = 0$

$\therefore \displaystyle\int_{(0,0,0)}^{(1,1,1)} \vec{\nabla}T \cdot d\vec{l} = 0 + 0 + 8 = 8$

ALONG $(1,1,0) \to (1,1,1)$ $\therefore$ $x = y = 1$ $\therefore$ $dx = dy = 0$

so $\vec{\nabla}T \cdot d\vec{l}\Big|_{\substack{x=y=1\\ dx=dy=0}} = (6z + 4x + 3yz^2)\,dz\Big|_{x=y=1} = (6z + 4 + 3z^2)\,dz$

so $\displaystyle\int_{(1,1,0)}^{(1,1,1)} \vec{\nabla}T \cdot d\vec{l} = \int_0^1 (6z + 4 + 3z^2)\,dz$

$= 3z^2 + 4z + z^3\Big|_0^1 = 8$

b) ALONG $(0,0,0) \to (0,0,1)$ $\therefore$ $x = y = 0$ $\therefore$ $dx = dy = 0$

so $\vec{\nabla}T \cdot d\vec{l}\Big|_{\substack{x=y=0\\ dx=dy=0}} = (6z + 4x + 3yz^2)\,dz\Big|_{\substack{x=y=0\\ dx=dy=0}} = 6z\,dz$ so $\displaystyle\int_{(0,0,0)}^{(0,0,1)} \vec{\nabla}T \cdot d\vec{l} = \int_0^1 6z\,dz = 3z^2\Big|_0^1 = 3$

ALONG $(0,0,1) \to (0,1,1)$ $\therefore$ $x=0,\ z=1$ $\therefore$ $dx=dz=0$

so

$$\vec{\nabla}T\cdot d\vec{l}\Big|_{\substack{x=0,\,z=1\\ dx=dz=0}} = z^3 dy\Big|_{z=1} = dy \quad \text{so} \quad \int_{(0,0,1)}^{(0,1,1)} \vec{\nabla}T\cdot d\vec{l} = \int_0^1 dy = 1$$

ALONG $(0,1,1) \to (1,1,1)$ $\therefore$ $y=z=1$ $\therefore$ $dy=dz=0$

so

$$\vec{\nabla}T\cdot d\vec{l}\Big|_{\substack{y=z=1\\ dy=dz=0}} = 4z\,dx\Big|_{z=1} = 4dx \quad \text{so} \quad \int_{(0,1,1)}^{(1,1,1)} \vec{\nabla}T\cdot d\vec{l} = \int_0^1 4dx = 4$$

$$\therefore \int_{(0,0,0)}^{(1,1,1)} \vec{\nabla}T\cdot d\vec{l} = 3+1+4 = 8!$$

c) ALONG THE PARABOLIC PATH $z=x^2,\ y=x$ $\therefore$ $dz=2x\,dx$ & $dy=dx$

so

$$\vec{\nabla}T\cdot d\vec{l}\Big|_{\substack{z=x^2,\,y=x\\ dz=2x\,dx,\,dy=dx}} = 4z\,dx + z^3 dy + (6z+4x+3yz^2)\,dz\Big|_{\substack{z=x^2,\,y=x\\ dz=2x\,dx,\,dy=dx}} = 4x^2dx + (x^2)^3dx + (6x^2+4x+3x(x^2)^2)2x\,dx$$

$$= 4x^2dx + x^6dx + (6x^2+4x+3x^3)2x\,dx = (4x^2+x^6+12x^3+8x^2+6x^6)\,dx$$

$$= (7x^6+12x^3+12x^2)\,dx \quad \text{so} \quad \int_{(0,1,1)}^{(1,1,1)} \vec{\nabla}T\cdot d\vec{l} = \int_0^1 (7x^6+12x^3+12x^2)\,dx$$

$$= x^7 + 3x^4 + 4x^3\Big|_0^1 = 1+3+4 = 8!$$

NOW, THE FUNDAMENTAL THEOREM FOR GRADIENTS IS

$$\int_{\vec{a}}^{\vec{b}} \vec{\nabla}T\cdot d\vec{l} = T(\vec{b}) - T(\vec{a}) \quad \text{so} \quad T(x=y=z=1) = 3z^2+4xz+yz^3 = 8$$

$$T(x=y=z=0) = 0$$

so

$$T(x=y=z=1) - T(x=y=z=0) = 8!$$

2. THE DIVERGENCE THEOREM IS ...

$$\int_V (\vec{\nabla}\cdot\vec{v})\,d\tau = \int_S \vec{v}\cdot d\vec{a}$$

NOW FOR $\vec{v} = (y^2z^2)\hat{x} + (3z^2x^2)\hat{y} + (4x^2y^2)\hat{z}$

so

$$\vec{\nabla}\cdot\vec{v} = \frac{\partial v_x}{\partial x} + \frac{\partial}{\partial y}v_y + \frac{\partial}{\partial z}v_z = \cancel{\frac{\partial}{\partial x}(y^2z^2)}^{\,0} + \cancel{\frac{\partial}{\partial y}(3z^2x^2)}^{\,0} + \cancel{\frac{\partial}{\partial z}(4x^2y^2)}^{\,0} = 0$$

NOW

$$\int_V (\vec{\nabla}\cdot\vec{v})\,d\tau = \int_0^2\int_0^2\int_0^2 0\,dx\,dy\,dz = 0$$

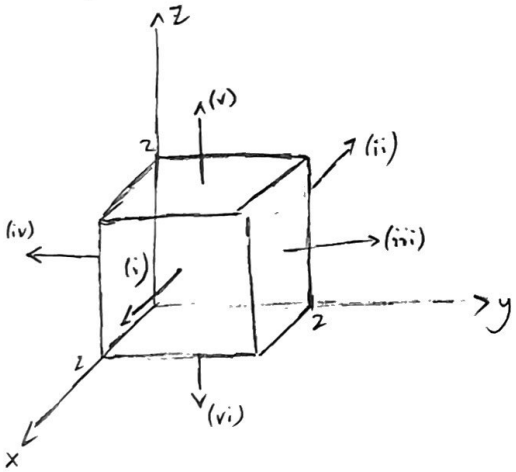

FOR SURFACE (i)...

$d\vec{a} = dy\,dz\,\hat{x}$ so $\vec{v}\cdot d\vec{a}\Big|_{x=2} = y^2z^2\,dy\,dz\Big| = y^2z^2\,dy\,dz$

so

$$\int_{(i)} \vec{v}\cdot d\vec{a} = \int_0^2\int_0^2 y^2z^2\,dy\,dz = \int_0^2 y^2\,dy\int_0^2 z^2\,dz = \frac{y^3}{3}\Big|_0^2\,\frac{z^3}{3}\Big|_0^2$$

$$= \frac{8}{3}\cdot\frac{8}{3} = \frac{64}{9}$$

FOR SURFACE (ii)...

$d\vec{a} = -dy\,dz\,\hat{x}$ so $\vec{v}\cdot d\vec{a} = -y^2z^2\,dy\,dz\Big|_{x=0} = -y^2z^2\,dy\,dz$

so

$$\int_{(ii)} \vec{v}\cdot d\vec{a} = -\int_0^2\int_0^2 y^2z^2\,dy\,dz = -\frac{64}{9}$$

FOR SURFACE (iii)...

$d\vec{a} = dx\,dz\,\hat{y}$ so $\vec{v}\cdot d\vec{a} = 3z^2x^2\,dx\,dz\Big|_{y=2} = 3z^2x^2\,dx\,dz$

so

$$\int_{(iii)} \vec{v}\cdot d\vec{a} = \int_0^2\int_0^2 3z^2x^2\,dx\,dz = 3\int_0^2 x^2\,dx\int_0^2 z^2\,dz = 3\frac{x^3}{3}\Big|_0^2\,\frac{z^3}{3}\Big|_0^2 = 8\cdot\frac{8}{3} = \frac{64}{3}$$

FOR SURFACE (iv)...

$$d\vec{a} = -dx\,dz\,\hat{y} \quad \text{so} \quad \vec{v}\cdot d\vec{a}\Big|_{y=0} = -3z^2x^2\,dz\,dx$$

so

$$\int_{(iv)} \vec{v}\cdot d\vec{a} = -3\int_0^2\int_0^2 z^2x^2\,dz\,dx = -\frac{64}{3}$$

FOR SURFACE (v)...

$$d\vec{a} = dx\,dy\,\hat{z} \quad \text{so} \quad \vec{v}\cdot d\vec{a}\Big|_{z=2} = 4x^2y^2\,dx\,dy$$

so

$$\int_{(v)} \vec{v}\cdot d\vec{a} = 4\int_0^2\int_0^2 x^2y^2\,dx\,dy = 4\,\frac{x^3}{3}\Big|_0^2\,\frac{y^3}{3}\Big|_0^2 = 4\cdot\frac{8}{3}\cdot\frac{8}{3} = \frac{256}{9}$$

FOR SURFACE (vi)...

$$d\vec{a} = -dx\,dy\,\hat{z} \quad \text{so} \quad \vec{v}\cdot d\vec{a}\Big|_{z=0} = -4x^2y^2\,dx\,dy \quad \text{so} \quad \int_{(vi)} \vec{v}\cdot d\vec{a} = -\frac{256}{9}$$

so

$$\oint \vec{v}\cdot d\vec{a} = \frac{64}{9} - \frac{64}{9} + \frac{64}{3} - \frac{64}{3} + \frac{256}{9} - \frac{256}{9} = 0$$

3. STOKE'S THEOREM IS

$$\int_S (\vec{\nabla}\times\vec{v})\cdot d\vec{a} = \oint_P \vec{v}\cdot d\vec{l}$$

NOW

$$\vec{\nabla}\times\vec{v} = \begin{vmatrix} \hat{x} & \hat{y} & \hat{z} \\ \partial/\partial x & \partial/\partial y & \partial/\partial z \\ y^2z^2 & 3z^2x^2 & 4x^2y^2 \end{vmatrix} = \hat{x}\left(\frac{\partial}{\partial y}(4x^2y^2) - \frac{\partial}{\partial z}(3z^2x^2)\right) + \hat{y}\left(\frac{\partial}{\partial z}(y^2z^2) - \frac{\partial}{\partial x}(4x^2y^2)\right)$$

$$+\hat{z}\left(\frac{\partial}{\partial x}(3z^2x^2) - \frac{\partial}{\partial y}(y^2z^2)\right)$$

$$= \hat{x}\left(8x^2y - 6zx^2\right) + \hat{y}\left(2y^2z - 8xy^2\right) + \hat{z}\left(6z^2x - 2yz^2\right)$$

so

$$\vec{\nabla}\times\vec{v} = 2x^2(4y-3z)\hat{x} + 2y^2(z-4x)\hat{y} + 2z^2(3x-y)\hat{z}$$

NOW

$$d\vec{a} = dy\,dz\,\hat{x}$$

so

$$(\vec{\nabla}\times\vec{v})\cdot d\vec{a}\Big|_{x=0} = 2x^2(4y-3z)\,dy\,dz\Big|_{x=0} = 0 \qquad \text{so } \int(\vec{\nabla}\times\vec{v})\cdot d\vec{a} = 0$$

NOW, THE LINE INTEGRAL HAS 3 PIECES..

1) ALONG THE $z=0$ CURVE FIRST....

$$d\vec{l} = dy\,\hat{y} \qquad \text{so } \vec{v}\cdot d\vec{l} = 3z^2x^2\,dy \qquad \text{so } \int \vec{v}\cdot d\vec{l}\Big|_{x=0} = 0$$

2) ALONG THE $z=2-y$ CURVE SECOND...

NOW $d\vec{l} = dy\,\hat{y} + dz\,\hat{z}$ so

$$\vec{v}\cdot d\vec{l}\Big|_{\substack{z=2-y \\ dz=-dy}} = 3z^2x^2\,dy + 4x^2y^2\,dz = 3(2-y)^2x^2\,dy + 4x^2y^2\cdot -dy$$

$$= 3(2-y)^2x^2\,dy - 4x^2y^2\,dy$$

so

$$\int_{x=0} \vec{v}\cdot d\vec{l} = 0$$

3) Along the $y=0$ curve that...

$$d\vec{l} = dz\,\hat{i} \quad \Rightarrow \quad \vec{v}\cdot d\vec{l} = 4x\hat{y}\cdot dz \quad \Rightarrow \quad \int \vec{v}\cdot d\vec{l}\,\Big|_{x=0} = 0$$

4

$$\vec{v} = (r^2 \sin\theta)\hat{r} + (r^2\cos\theta)\hat{\theta} + (r^2 \sin\phi\cos\theta)\hat{\phi}$$

NOW THE DIVERGENCE OF $\vec{v}$ IN SPHERICAL-POLAR COORDINATES IS...

$$\vec{\nabla}\cdot\vec{v} = \frac{1}{r^2}\frac{\partial}{\partial r}(r^2 v_r) + \frac{1}{r\sin\theta}\frac{\partial}{\partial\theta}(\sin\theta\, v_\theta) + \frac{1}{r\sin\theta}\frac{\partial v_\phi}{\partial\phi}$$

NOW CALCULATING IN PIECES...

$$\frac{1}{r^2}\frac{\partial}{\partial r}(r^2 v_r) = \frac{1}{r^2}\frac{\partial}{\partial r}(r^4\sin\theta) = \frac{1}{r^2}\cdot 4r^3\sin\theta = 4r\sin\theta$$

$$\frac{1}{r\sin\theta}\frac{\partial}{\partial\theta}(\sin\theta\, v_\theta) = \frac{1}{r\sin\theta}\frac{\partial}{\partial\theta}(r^2\sin\theta\cos\theta) = \frac{r}{\sin\theta}\frac{\partial}{\partial\theta}(\sin\theta\cos\theta) = \frac{r}{\sin\theta}(\cos^2\theta - \sin^2\theta)$$

$$\frac{1}{r\sin\theta}\frac{\partial v_\phi}{\partial\phi} = \frac{1}{r\sin\theta}\frac{\partial}{\partial\phi}(r^2\sin\phi\cos\theta) = \frac{1}{r\sin\theta}r^2\cos\phi\cos\theta = r\cos\phi\cot\theta$$

NOW PUTTING IT ALL TOGETHER...

$$\vec{\nabla}\cdot\vec{v} = 4r\sin\theta + r(\cos\theta\cot\theta - \sin\theta) + r\cos\phi\cot\theta$$

$$= r\left[3\sin\theta + \cos\theta\cot\theta + \cos\phi\cot\theta\right]$$

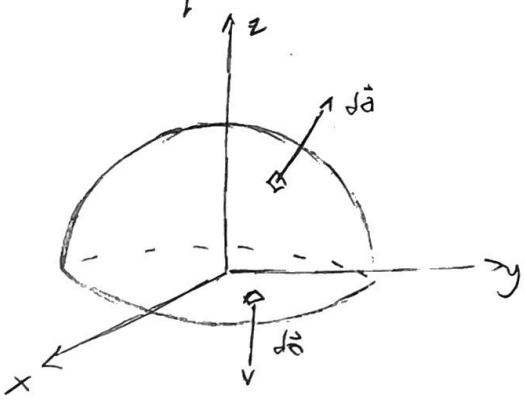

NOW

$$\int(\vec{\nabla}\cdot\vec{v})\,d\tau = \iiint r\left[3\sin\theta + \cos\theta\cot\theta + \cos\phi\cot\theta\right]\cdot r^2\sin\theta\,dr\,d\theta\,d\phi$$

$$= \int_0^R r^3 dr \int_0^{2\pi} d\phi \int_0^{\pi/2}\left[3\sin^2\theta + \cos^2\theta + \cos\phi\cos\theta\right]d\theta$$

NOW

$$\int_0^{\pi/2}\sin^2\theta\,d\theta = \frac{1}{2}\int_0^{\pi/2}(1-\cos 2\theta)\,d\theta = \frac{1}{2}\left(\theta - \frac{1}{2}\sin(2\theta)\right)\Big|_0^{\pi/2} = \frac{1}{2}\left(\frac{\pi}{2} - 0\right) = \frac{\pi}{4}$$

$$\int_0^{\pi/2}\cos^2\theta\,d\theta = \frac{1}{2}\int_0^{\pi/2}(1+\cos 2\theta)\,d\theta = \frac{1}{2}\left(\theta + \frac{1}{2}\sin(2\theta)\right) = \frac{\pi}{4}$$

$$\int_0^{\pi/2}\cos\phi\cos\theta\,d\theta = \cos\phi\sin\theta\Big|_0^{\pi/2} = \cos\phi$$

SO

$$\int(\vec{\nabla}\cdot\vec{v})\,d\tau = \int_0^R r^3 dr\int_0^{2\pi}\left[\frac{3\pi}{4} + \frac{\pi}{4} + \cos\phi\right]d\phi = \int_0^R r^3 dr\left[\pi\phi\Big|_0^{2\pi} + \sin\phi\Big|_0^{2\pi}\right] = 2\pi^2\cdot\frac{1}{4}r^4\Big|_0^R$$

So

$$\int (\vec{\nabla}\cdot\vec{v})\,d\tau = \frac{\pi^2}{2}R^4$$

Now

$$\oint \vec{v}\cdot d\vec{a} = \int_{r=R} \vec{v}\cdot d\vec{a} + \int_{xy\ \text{PLANE}} \vec{v}\cdot d\vec{a}$$

For the bowl...

$$d\vec{a} = R^2\sin\theta\, d\theta\, d\phi\, \hat{r} \quad \text{so} \quad \vec{v}\cdot d\vec{a} = R^2\sin\theta\, R^2\sin\theta\, d\theta\, d\varphi = R^4\sin^2\theta\, d\theta\, d\varphi$$

$$\int_{r=R} \vec{v}\cdot d\vec{a} = R^4\int_0^{2\pi}\int_0^{\pi/2}\sin^2\theta\, d\theta\, d\varphi = R^4\int_0^{2\pi} d\varphi\cdot\frac{1}{2}\int_0^{\pi/2}(1-\cos 2\theta)\,d\theta = R^4\cdot 2\pi\cdot\frac{1}{2}\left(\theta-\frac{1}{2}\sin 2\theta\right)\Big|_0^{\pi/2}$$

$$= R^4\cdot\pi\cdot\frac{\pi}{2} = \frac{\pi^2}{2}R^4$$

For the xy plane...

$$d\vec{a} = -r\,dr\,d\theta\,\hat{z} \quad \vdots \quad \vec{v}\Big|_{\theta=\pi/2} = r^2\hat{r} \quad \text{so} \quad \vec{v}\cdot d\vec{a}\Big|_{\theta=\pi/2} = -r^3\,dr\,d\theta\,(\hat{z}\cdot\hat{r})$$

Now

$$\hat{r}\Big|_{\theta=\pi/2} = \sin\theta\cos\varphi\,\hat{x} + \sin\theta\sin\phi\,\hat{y} + \cos\theta\,\hat{z}\Big|_{\theta=\pi/2} = \cos\varphi\,\hat{x} + \sin\phi\,\hat{y}$$

$$\text{so} \quad \hat{r}\cdot\hat{z}\Big|_{\theta=\pi/2} = 0$$

$$\therefore \oint \vec{v}\cdot d\vec{a} = \frac{\pi^2}{2}R^4 = \int(\vec{\nabla}\cdot\vec{v})\,d\tau$$

5. $\vec{v} = s^2(3+\sin^2\phi)\hat{s} + s^2\sin\phi\cos\phi\,\hat{\phi} + 5z^2\hat{z}$

a) NOW THE DIVERGENCE OF $\vec{v}$ IN CYLINDRICAL COORDINATES IS..

$$\vec{\nabla}\cdot\vec{v} = \frac{1}{s}\frac{\partial}{\partial s}\left(s^3(3+\sin^2\phi)\right) + \frac{1}{s}\frac{\partial}{\partial\phi}\left(s^2\sin\phi\cos\phi\right) + \frac{\partial}{\partial z}(5z^2)$$

$$= 3s(3+\sin^2\phi) + s\left(\cos^2\phi - \sin^2\phi\right) + 10z$$

$$= s\left[9+3\sin^2\phi + \cos^2\phi - \sin^2\phi\right] + 10z = s\left[9+2\sin^2\phi+\cos^2\phi\right]+10z$$

$$= s\left[10+\sin^2\phi\right] + 10z \qquad \text{SINCE } \sin^2\phi + \cos^2\phi = 1$$

NOW

b) $$\int(\vec{\nabla}\cdot\vec{v})\,d\tau = \int_0^5\int_0^2\int_0^{\pi/2}\left[s(10+\sin^2\phi)+10z\right]s\,ds\,d\phi\,dz$$

$$= \int_0^5 dz\int_0^2 s^2 ds\int_0^{\pi/2}(10+\sin^2\phi)\,d\phi + 10\int_0^5 z\,dz\int_0^2 s\,ds\int_0^{\pi/2}d\phi$$

$$= z\Big|_0^5\,\frac{s^3}{3}\Big|_0^2\left[10\phi\Big|_0^{\pi/2} + \frac{1}{2}\int_0^{\pi/2}(1-\cos 2\phi)\,d\phi\right] + 10\,\frac{z^2}{2}\Big|_0^5\,\frac{s^2}{2}\Big|_0^2\,\phi\Big|_0^{\pi/2}$$

$$= 5\cdot\frac{8}{3}\left[10\frac{\pi}{2} + \frac{1}{2}\left[\phi - \frac{1}{2}\sin 2\phi\right]_0^{\pi/2}\right] + 5\cdot 5^2\cdot\frac{2^2}{2}\cdot\frac{\pi}{2}$$

$$= \frac{40}{3}\left[5\pi + \frac{\pi}{4}\right] + 125\pi = \frac{40}{3}\cdot\frac{21}{4}\pi + 125\pi = 70\pi + 125\pi = 195\pi$$

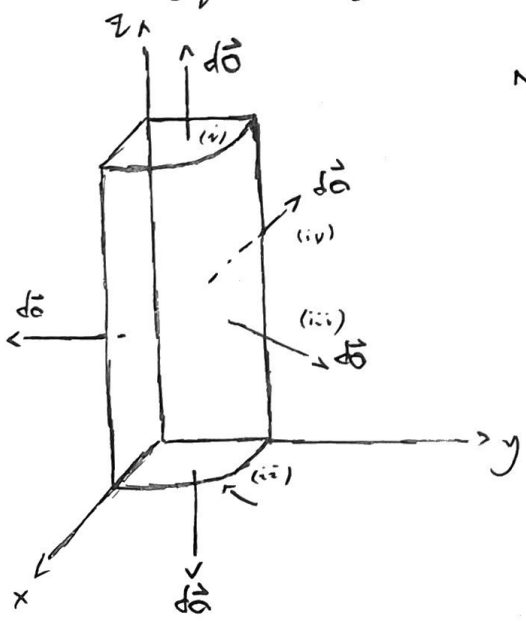

NOTICE THAT THE CYLINDER HAS 5 SURFACES. WE'LL HAVE TO CALCULATE THE FLUX OF $\vec{v}$ THROUGH EACH

1) TOP SURFACE (i)

$$d\vec{a} = s\,d\phi\,ds\,\hat{z}$$

SO

$$\vec{v}\cdot d\vec{a}\Big|_{z=5} = 5z^2 s\,ds\,d\phi\Big|_{z=5} = 125\,s\,ds\,d\phi$$

so $\displaystyle\int_{(i)} \vec{v}\cdot d\vec{a} = 125\int_0^{\pi/2}\int_0^2 s\,ds\,d\phi = 125\int_0^2 s\,ds\int_0^{\pi/2} d\phi = 125\cdot\frac{s^2}{2}\Big|_0^2 \phi\Big|_0^{\pi/2} = 125\cdot 2\cdot\frac{\pi}{2}$

$= 125\pi$

2) SURFACE (ii) = BOTTOM SURFACE

$$\vec{v}\cdot d\vec{a}\Big|_{z=0} = 0 \quad \text{so} \quad \int_{(ii)} \vec{v}\cdot d\vec{a} = 0$$

3) SURFACE (iv) = SURFACE IN yz PLANE

$$d\vec{a} = -ds\,dz\,\hat{x}$$

so $\displaystyle\vec{v}\cdot d\vec{a}\Big|_{\phi=\pi/2} = \left(s^2(3+\sin^2\phi)\hat{s} + s^2\sin\phi\cos\phi\,\hat{\phi} + 5z^2\hat{z}\right)\Big|_{\phi=\pi/2}\cdot -ds\,dz\,\hat{x}$

$$= \left(4s^2\hat{s} + 5z^2\hat{z}\right)\cdot -ds\,dz\,\hat{x} = -4s^2 ds\,dz(\hat{s}\cdot\hat{x})$$

NOW $\hat{s}\Big|_{\phi=\pi/2} = \hat{y}$ so $\hat{s}\cdot\hat{x}\Big|_{\phi=\pi/2} = 0$ $\therefore \displaystyle\int_{(iii)} \vec{v}\cdot d\vec{a} = 0$

4) SURFACE (iii) = SURFACE W/ $s=2$

$$\vec{v}\Big|_{s=2} = 4(3+\sin^2\phi)\hat{s} + 4\sin\phi\cos\phi\,\hat{\phi} + 5z^2\hat{z}$$

$d\vec{a} = s\,d\phi\,dz\,\hat{s}$ so $\displaystyle\vec{v}\cdot d\vec{a}\Big|_{s=2} = 4(3+\sin^2\phi)2\,d\phi\,dz = 8(3+\sin^2\phi)\,d\phi\,dz$

so

$$\int_{(iii)} \vec{v}\cdot d\vec{a} = 8\int_0^5\int_0^{\pi/2}(3+\sin^2\phi)\,d\phi\,dz = 8\int_0^5 dz\int_0^{\pi/2}(3+\sin^2\phi)\,d\phi = 40\left[3\phi\Big|_0^{\pi/2} + \frac{1}{2}\int_0^{\pi/2}(1-\cos 2\phi)\,d\phi\right]$$

$$= 40\left[\frac{3\pi}{2} + \frac{1}{2}\left(\phi - \frac{1}{2}\sin 2\phi\right)\Big|_0^{\pi/2}\right] = 40\left[\frac{3\pi}{2} + \frac{\pi}{4}\right] = 40\cdot\frac{7}{4}\pi = 70\pi$$

5) SURFACE (V) = SURFACE IN XZ PLANE

$$d\vec{a} = -ds\,dz\,\hat{y}$$

so

$$\vec{v}\cdot d\vec{a}\Big|_{\phi=0} = \left(s^2(3+\sin^2\phi)\hat{s} + s^2\sin\phi\cos\phi\,\hat{\phi} + 5z^2\hat{z}\right)\Big|_{\phi=0}\cdot -ds\,dz\,\hat{y}$$

$$= -\left(3s^2\hat{s} + 5z^2\hat{z}\right)\cdot ds\,dz\,\hat{y} = -3s^2 ds\,dz\,(\hat{s}\cdot\hat{y})$$

NOW

$$\hat{s}\Big|_{\phi=0} = \cos\phi\,\hat{x} + \sin\phi\,\hat{y}\Big|_{\phi=0} = \hat{x} \quad \text{so} \quad \vec{v}\cdot d\vec{a}\Big|_{\phi=0} = 0 \quad \therefore \int_{(V)} \vec{v}\cdot d\vec{a} = 0$$

so

$$\oint \vec{v}\cdot d\vec{a} = 125\pi + 0 + 0 + 70\pi + 0 = 195\pi \quad \checkmark$$

Now

$$\vec{\nabla}\times\vec{v} = \left(\frac{1}{s}\frac{\partial v_z}{\partial \phi} - \frac{\partial v_\phi}{\partial z}\right)\hat{s} + \left(\frac{\partial v_s}{\partial z} - \frac{\partial v_z}{\partial s}\right)\hat{\phi} + \frac{1}{s}\left[\frac{\partial}{\partial s}(s v_\phi) - \frac{\partial v_s}{\partial \phi}\right]\hat{z}$$

$$= \left[\frac{1}{s}\underbrace{\cancel{\frac{\partial}{\partial \phi}(5z^3)}}_{0} - \underbrace{\cancel{\frac{\partial}{\partial z}(s^2 \sin\phi\cos\phi)}}_{0}\right]\hat{s} + \left[\frac{\partial}{\partial z}\left(s^2(\cancelto{0}{3+\sin^2\phi})\right) - \cancelto{0}{\frac{\partial}{\partial s}(5z^3)}\right]\hat{\phi}$$

$$+ \frac{1}{s}\left[\frac{\partial}{\partial s}(s^3 \sin\phi\cos\phi) - \frac{\partial}{\partial \phi}\left(s^2(3+\sin^2\phi)\right)\right]\hat{z}$$

$$= \frac{1}{s}\left[3s^2\sin\phi\cos\phi - 2s^2\sin\phi\cos\phi\right]\hat{z} = (s\sin\phi\cos\phi)\hat{z}$$

$$\vec{\nabla}\times\vec{v} = s\sin\phi\cos\phi\,\hat{z}$$

6. $\vec{F}_1 = y^2\hat{x} + z^2\hat{y} + x^2\hat{z}$

$\vec{F}_2 = x^2\hat{x} + y^2\hat{y} + z^2\hat{z}$

a) THE DIVERGENCE OF $\vec{F}_1$ IS...

$$\vec{\nabla}\cdot\vec{F}_1 = \frac{\partial}{\partial x}(y^2) + \frac{\partial}{\partial y}(z^2) + \frac{\partial}{\partial z}(x^2) = 0$$

- A DIVERGENCE LESS FIELD!

$\therefore [\vec{F}_1 = \vec{\nabla}\times\vec{A}_1]$

WHEREAS THE CURL OF $\vec{F}_1$ IS...

$$\vec{\nabla}\times\vec{F}_1 = \begin{vmatrix} \hat{x} & \hat{y} & \hat{z} \\ \partial/\partial x & \partial/\partial y & \partial/\partial z \\ y^2 & z^2 & x^2 \end{vmatrix} = \hat{x}\left(\cancel{\frac{\partial}{\partial y}x^2}^{\to 0} - \frac{\partial}{\partial z}z^2\right) + \hat{y}\left(\cancel{\frac{\partial}{\partial z}y^2}^{\to 0} - \frac{\partial}{\partial x}x^2\right) + \hat{z}\left(\cancel{\frac{\partial}{\partial x}z^2}^{\to 0} - \frac{\partial}{\partial y}y^2\right)$$

$$= -2z\hat{x} - 2x\hat{y} - 2y\hat{z}$$

THE DIVERGENCE OF $\vec{F}_2$ IS...

$$\vec{\nabla}\cdot\vec{F}_2 = \frac{\partial}{\partial x}x^2 + \frac{\partial}{\partial y}y^2 + \frac{\partial}{\partial z}z^2 = 2x + 2y + 2z$$

WHEREAS THE CURL OF $\vec{F}_2$ IS...

$$\vec{\nabla}\times\vec{F}_2 = \begin{vmatrix} \hat{x} & \hat{y} & \hat{z} \\ \partial/\partial x & \partial/\partial y & \partial/\partial z \\ x^2 & y^2 & z^2 \end{vmatrix} = \hat{x}\left(\cancel{\frac{\partial}{\partial y}z^2}^{\to 0} - \cancel{\frac{\partial}{\partial z}y^2}^{\to 0}\right) + \hat{y}\left(\cancel{\frac{\partial}{\partial z}x^2}^{\to 0} - \cancel{\frac{\partial}{\partial x}z^2}^{\to 0}\right) + \hat{z}\left(\cancel{\frac{\partial}{\partial x}y^2}^{\to 0} - \cancel{\frac{\partial}{\partial y}x^2}^{\to 0}\right)$$

$= 0$ - A CURL-LESS FIELD!

$\therefore [\vec{F}_2 = -\vec{\nabla}V_2]$

NOW

$$-\vec{\nabla}V_2 = -\left(\hat{x}\frac{\partial}{\partial x}V_2 + \hat{y}\frac{\partial}{\partial y}V_2 + \hat{z}\frac{\partial V_2}{\partial z}\right) = x^2\hat{x} + y^2\hat{y} + z^2\hat{z}$$

SO

$$-\frac{\partial V_2}{\partial x} = x^2 \qquad \therefore V_2 = -\frac{1}{3}x^3 + f(y,z)$$

AN ARBITRARY FUNCTION OF y & z

$$-\frac{\partial V_2}{\partial y} = y^2 \qquad \therefore V_2 = -\frac{1}{3}y^2 + g(x,z)$$

$$-\frac{\partial V}{\partial z} = z^2 \quad \therefore \quad V_2 = -\frac{1}{3}z^2 + h(x,y)$$

NOTICE THAT

$$\boxed{V_2 = -\frac{1}{3}(x^3 + y^3 + z^3)}$$ SATISFIES ALL 3 CRITERIA

let $\vec{A}_1 = A_x\hat{x} + A_y\hat{y} + A_z\hat{z}$ so

$$\vec{\nabla} \times \vec{A}_1 = \begin{vmatrix} \hat{x} & \hat{y} & \hat{z} \\ \partial/\partial x & \partial/\partial y & \partial/\partial z \\ A_x & A_y & A_z \end{vmatrix} = \hat{x}\left(\frac{\partial A_z}{\partial y} - \frac{\partial A_y}{\partial z}\right) + \hat{y}\left(\frac{\partial}{\partial z}A_x - \frac{\partial}{\partial x}A_z\right) + \hat{z}\left(\frac{\partial A_y}{\partial x} - \frac{\partial A_x}{\partial y}\right)$$

$$= y^2\hat{x} + z^2\hat{y} + x^2\hat{z} = \vec{F}_1$$

so I need

1) $\frac{\partial A_z}{\partial y} - \frac{\partial A_y}{\partial z} = y^2$

2) $\frac{\partial A_x}{\partial z} - \frac{\partial A_z}{\partial x} = z^2$

3) $\frac{\partial A_y}{\partial x} - \frac{\partial A_x}{\partial y} = x^2$

SIMULTANEOUSLY SATISFIED. NOTICE THAT

$$A_z = \frac{1}{3}y^3$$

$$A_x = \frac{1}{3}z^3$$

$$A_y = \frac{1}{3}x^3$$ WORKS

CHECK:

1) $\frac{\partial A_z}{\partial y} - \frac{\partial A_y}{\partial z} = \frac{\partial}{\partial y}\left(\frac{1}{3}y^3\right) - \cancelto{0}{\frac{\partial}{\partial z}\left(\frac{1}{3}x^3\right)} = y^2$ ✓

2) $\frac{\partial A_x}{\partial z} - \frac{\partial A_z}{\partial x} = \frac{\partial}{\partial z}\left(\frac{1}{3}z^3\right) - \cancelto{0}{\frac{\partial}{\partial x}\left(\frac{1}{3}y^3\right)} = z^2$ ✓

3) $\frac{\partial A_y}{\partial x} - \frac{\partial A_x}{\partial y} = \frac{\partial}{\partial x}\left(\frac{1}{3}x^3\right) - \cancelto{0}{\frac{\partial}{\partial y}\left(\frac{1}{3}z^3\right)} = x^2$ ✓

so $$\boxed{\vec{A}_1 = \frac{1}{3}\left(z^3\hat{x} + x^3\hat{y} + y^3\hat{z}\right)}$$

b $\vec{F}_3 = (2yz)\hat{x} + (2zx)\hat{y} + (2xy)\hat{z}$

so

$$\vec{\nabla}\cdot\vec{F}_3 = \cancel{\frac{\partial}{\partial x}(2yz)}^{\,0} + \cancel{\frac{\partial}{\partial y}(2zx)}^{\,0} + \cancel{\frac{\partial}{\partial z}(2xy)}^{\,0} = 0$$

whereas

$$\vec{\nabla}\times\vec{F}_3 = \begin{vmatrix} \hat{x} & \hat{y} & \hat{z} \\ \partial/\partial x & \partial/\partial y & \partial/\partial z \\ 2yz & 2zx & 2xy \end{vmatrix} = \hat{x}\left(\frac{\partial}{\partial y}(2xy) - \frac{\partial}{\partial z}(2zx)\right) + \hat{y}\left(\frac{\partial}{\partial z}(2yz) - \frac{\partial}{\partial x}(2xy)\right)$$

$$+ \hat{z}\left(\frac{\partial}{\partial x}(2zx) - \frac{\partial}{\partial y}(2yz)\right)$$

$$= \hat{x}(2x - 2x) + \hat{y}(2y - 2y) + \hat{z}(2z - 2z) = 0! \quad \checkmark$$

$\Rightarrow$, SINCE THE FIELD IS CURLLESS...

$$\vec{F}_3 = -\vec{\nabla}V_3 = -\left(\hat{x}\frac{\partial}{\partial x} + \hat{y}\frac{\partial}{\partial y} + \hat{z}\frac{\partial}{\partial z}\right)V_3 = (2yz)\hat{x} + (2zx)\hat{y} + (2xy)\hat{z}$$

so

$$-\frac{\partial V_3}{\partial x} = 2yz \quad \therefore\ V_3 = -2yzx + f(y,z)$$

$$-\frac{\partial V_3}{\partial y} = 2zx \quad \therefore\ V_3 = -2zxy + g(x,z)$$

$$-\frac{\partial V_3}{\partial z} = +2xy \quad \therefore\ V_3 = -2xyz + h(x,y)$$

$$\therefore\ \boxed{V_3 = -2xyz}$$

SO, SINCE THE FIELD IS DIVERGENCELESS..

$$\vec{F}_3 = +\vec{\nabla}\times\vec{A}_3 = \hat{x}\left(\frac{\partial A_z}{\partial y} - \frac{\partial A_y}{\partial z}\right) + \hat{y}\left(\frac{\partial A_x}{\partial z} - \frac{\partial A_z}{\partial x}\right) + \hat{z}\left(\frac{\partial A_y}{\partial x} - \frac{\partial A_x}{\partial y}\right)$$

$$= 2yz\,\hat{x} + 2zx\,\hat{y} + 2xy\,\hat{z}$$

so

1) $\frac{\partial A_z}{\partial y} - \frac{\partial A_y}{\partial z} = 2yz$

2) $\frac{\partial A_x}{\partial z} - \frac{\partial A_z}{\partial x} = 2xz$

3) $\frac{\partial A_y}{\partial x} - \frac{\partial A_x}{\partial y} = 2xy$

NOTICE THAT

$A_x = xz^2$

$A_y = x^2y$

$A_z = y^2z$ SATISFIES ALL 3 CONDITIONS

CHECK:

1) $\frac{\partial A_z}{\partial y} - \frac{\partial A_y}{\partial z} = \frac{\partial}{\partial y}(y^2z) - \cancel{\frac{\partial}{\partial z}(x^2y)}^{\to 0} = 2yz$ ✓

2) $\frac{\partial A_x}{\partial z} - \frac{\partial A_z}{\partial x} = \frac{\partial}{\partial z}(xz^2) - \cancel{\frac{\partial}{\partial x}(y^2z)}^{\to 0} = 2xz$ ✓

3) $\frac{\partial A_y}{\partial x} - \frac{\partial A_x}{\partial y} = \frac{\partial}{\partial x}(x^2y) - \cancel{\frac{\partial}{\partial y}(xz^2)}^{\to 0} = 2xy$ ✓

so

$$\left[\vec{A}_3 = (xz^2)\hat{x} + (x^2y)\hat{y} + (y^2z)\hat{z}\right]$$