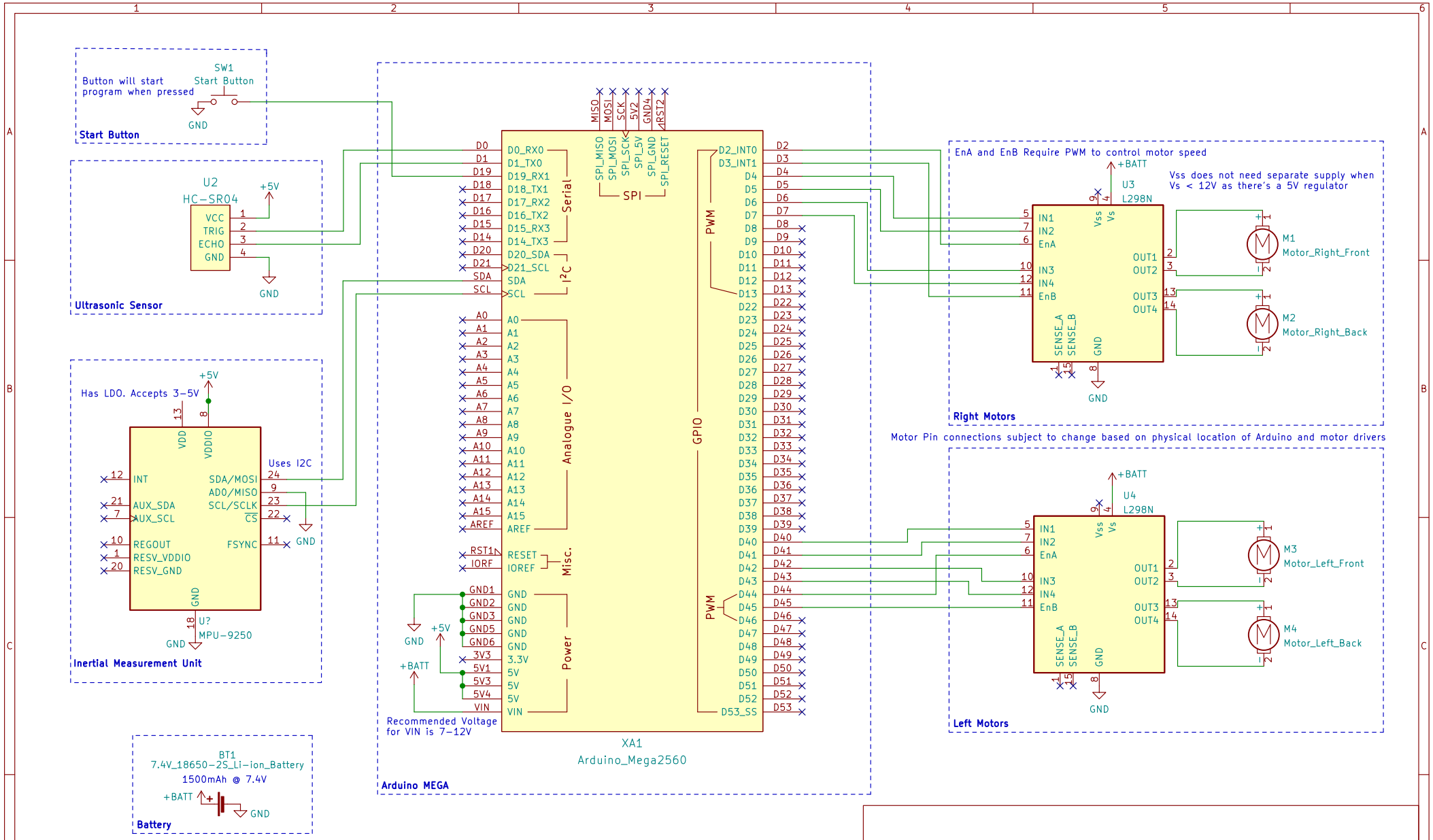

MTE 380 – Group 5

Sheet: /

File: electrical_overview.kicad_sch

Title: MTE 380 Project – Electrical Overview

Size: A4	Date: 2022-10-03	**Rev: v0**
KiCad E.D.A. kicad (6.0.1)		Id: 1/1