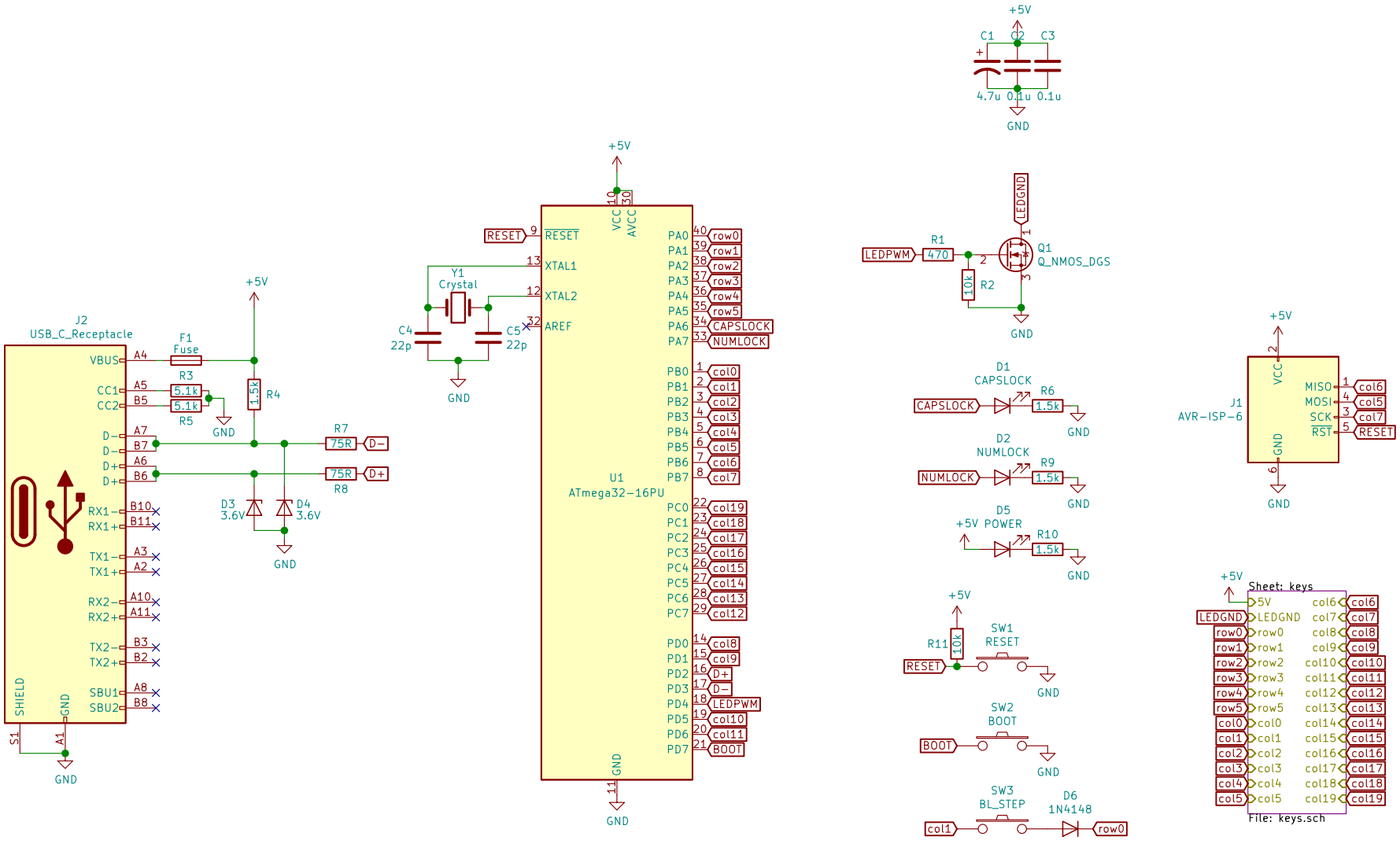

Sheet: /
File: main_pcb.sch

Title: QBoard − Front

Size: A4	Date: 2021−08−26	Rev: 0
KiCad E.D.A. eeschema (5.1.5)−3		Id: 1/2

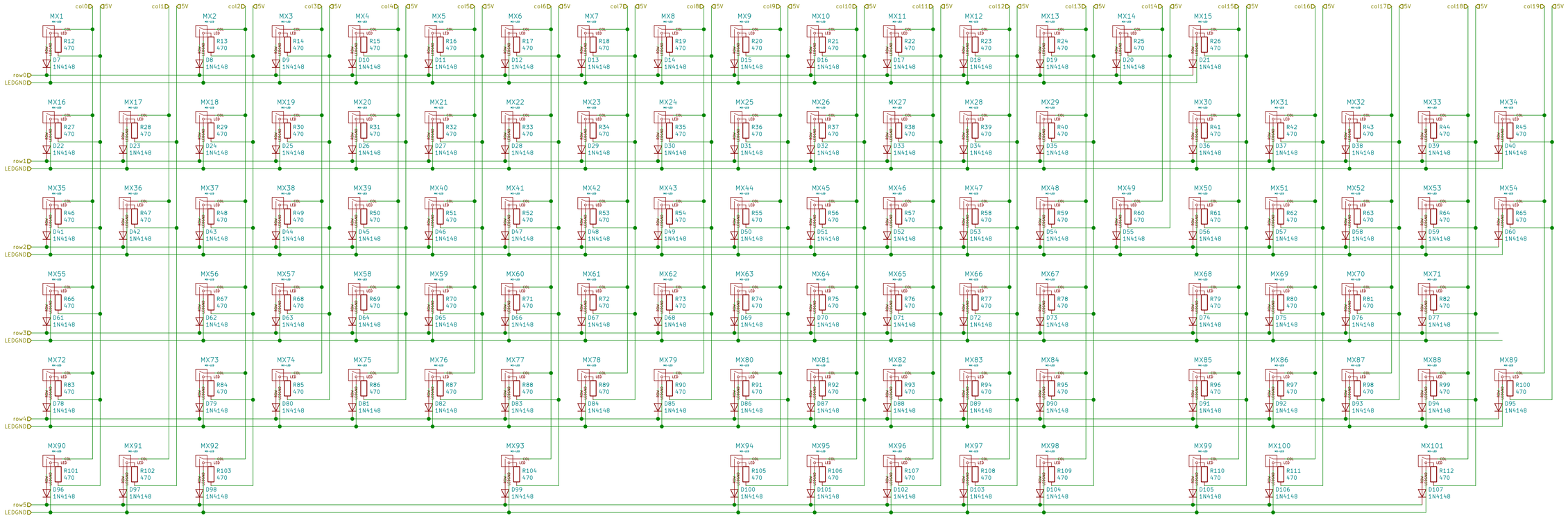

Sheet: /keys/
File: keys.sch

Title: QBoard – Main Keys

Size: A2	Date: 2021-08-26	Rev: 0
KiCad E.D.A. eeschema (5.1.5)-3		Id: 2/2