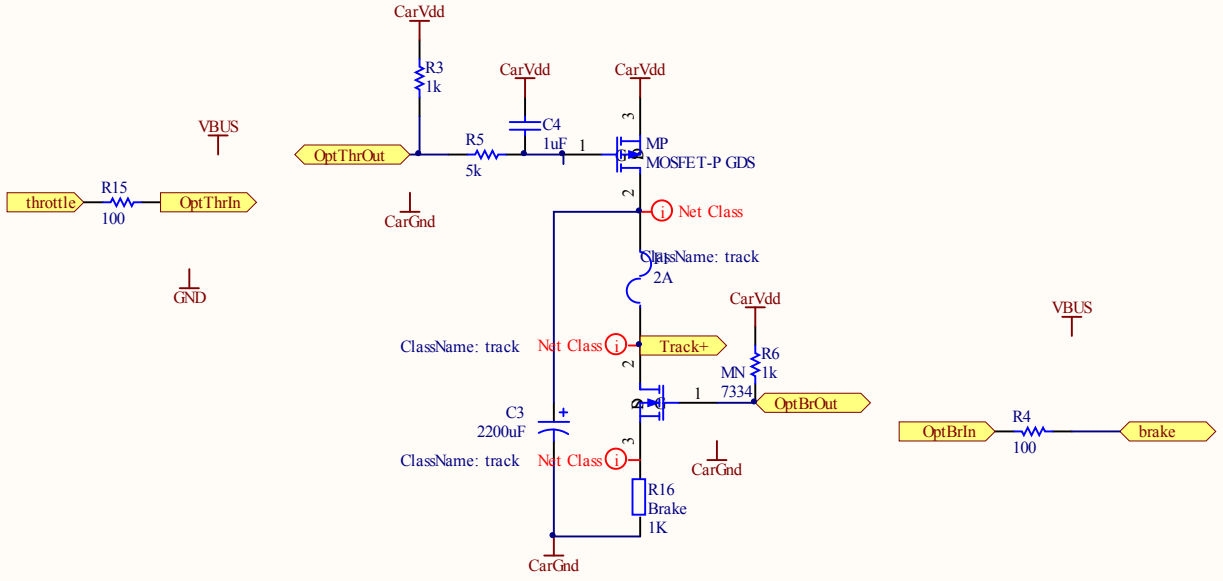

Title		
Size A	Number	Revision
Date: 4/27/2014		Sheet of
File: C:\Users\...\SlotCarChannel.SchDoc		Drawn By:

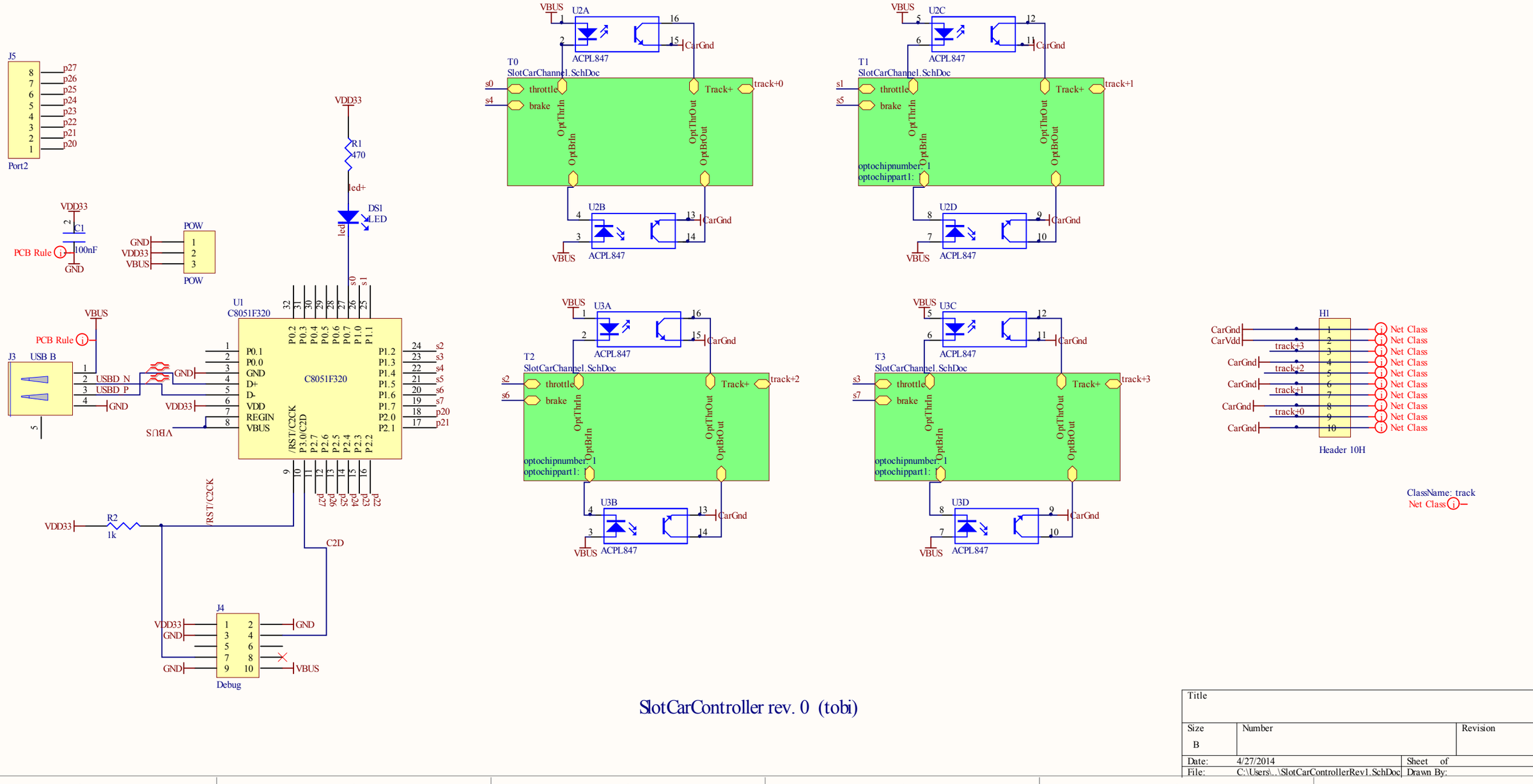

SlotCarController rev. 0 (tobi)

Title		
Size: B	Number	Revision
Date: 4/27/2014		Sheet of
File: C:\Users\...\SlotCarControllerRev1.SchDoc		Drawn By:

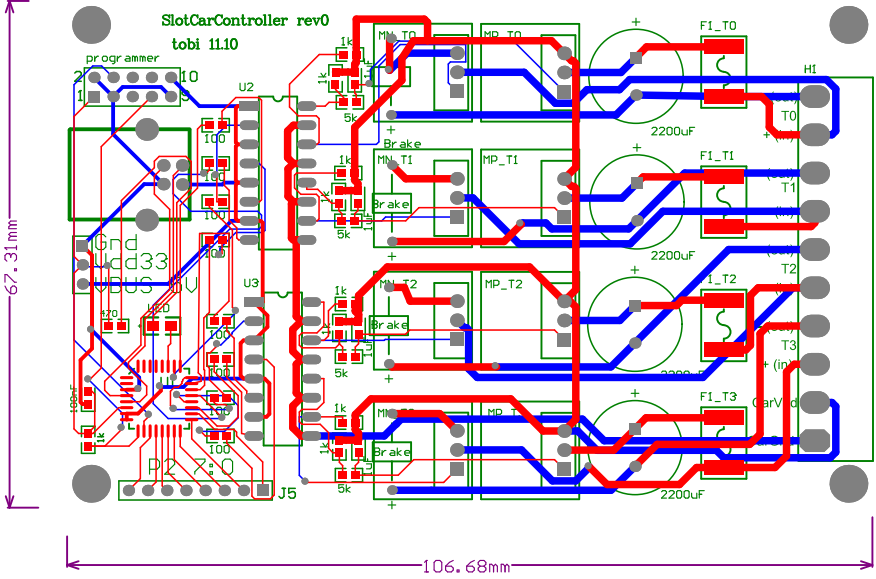
SlotCarController rev0
tobi 11.10
programmer
U2
U3
J5
MN_T0
MP_T0
MN_T1
MP_T1
MN_T2
MP_T2
F1_T0
F1_T1
F1_T2
F1_T3
H1
T0
T1
T2
T3
2200uF
Brake
Gnd
Udd33
VBUS 5V
P2 7:0
67.31mm
106.68mm

Bill of Materials

<Parameter Title not found>

Source Data From: SlotCarController.PrjPcb
Project: SlotCarController.PrjPcb
Variant: None

Creation Date: 4/27/2014 9:26:36 PM
Print Date: 41756 41756.89355

Footprint	Comment	LibRef	Designator	Description	Quantity
CC1608-0603	100nF	CAPCHIP	C1		1
CAPPR5-12.5x35	2200uF	Cap Pol1	C3_T0, C3_T1, C3_T2, C3_T3	Polarized Capacitor (Radial)	4
CC1608-0603	1uF	Cap Semi	C4_T0, C4_T1, C4_T2, C4_T3	Capacitor (Semiconductor SIM Model)	4
0805LED	LED	LED	DS1	LED, SMT 3mm by 1.5mm	1
2920Littelfuse	2A	Fuse 2	F1_T0, F1_T1, F1_T2, F1_T3	Fuse	4
SL508/10/90	Header 10H	Header 10H	H1	Header, 10-Pin, Right Angle	1
usb	USB B	USB	J3	USB TypB	1
HDR2X5	Debug	Header 5X2	J4	Header, 5-Pin, Dual row	1
HDR1X8	Port2	Header 8	J5	Header, 8-Pin	1
TO220_HEATSINK	7334	MOSFET-N-GDS	MN_T0, MN_T1, MN_T2, MN_T3	N-Channel MOSFET	4
TO220_HEATSINK	MOSFET-P GDS	MOSFET-P-GDS	MP_T0, MP_T1, MP_T2, MP_T3	P-Channel MOSFET	4
HDR1X3	POW	Header 3	POW	Header, 3-Pin	1
CR1608-0603	470	RES1	R1		1
CR1608-0603	1k	RES1, Res Semi	R2, R3_T0, R3_T1, R3_T2, R3_T3, R6_T0, R6_T1, R6_T2, R6_T3	Semiconductor Resistor	9
CR1608-0603	100	Res Semi	R4_T0, R4_T1, R4_T2, R4_T3, R15_T0, R15_T1, R15_T2, R15_T3	Semiconductor Resistor	8
CR1608-0603	5k	Res Semi	R5_T0, R5_T1, R5_T2, R5_T3	Semiconductor Resistor	4
Axial 0.4	Brake	Res2	R16_T0, R16_T1, R16_T2, R16_T3	Resistor	4
TQFP32	C8051F320	C8051F320	U1	Silicon Labs USB Microcontroller	1
DIP16	ACPL847	Opto16	U2, U3	16-Pin 4-channel Phototransistor Optocoupler	2
					56

Approved	Notes	