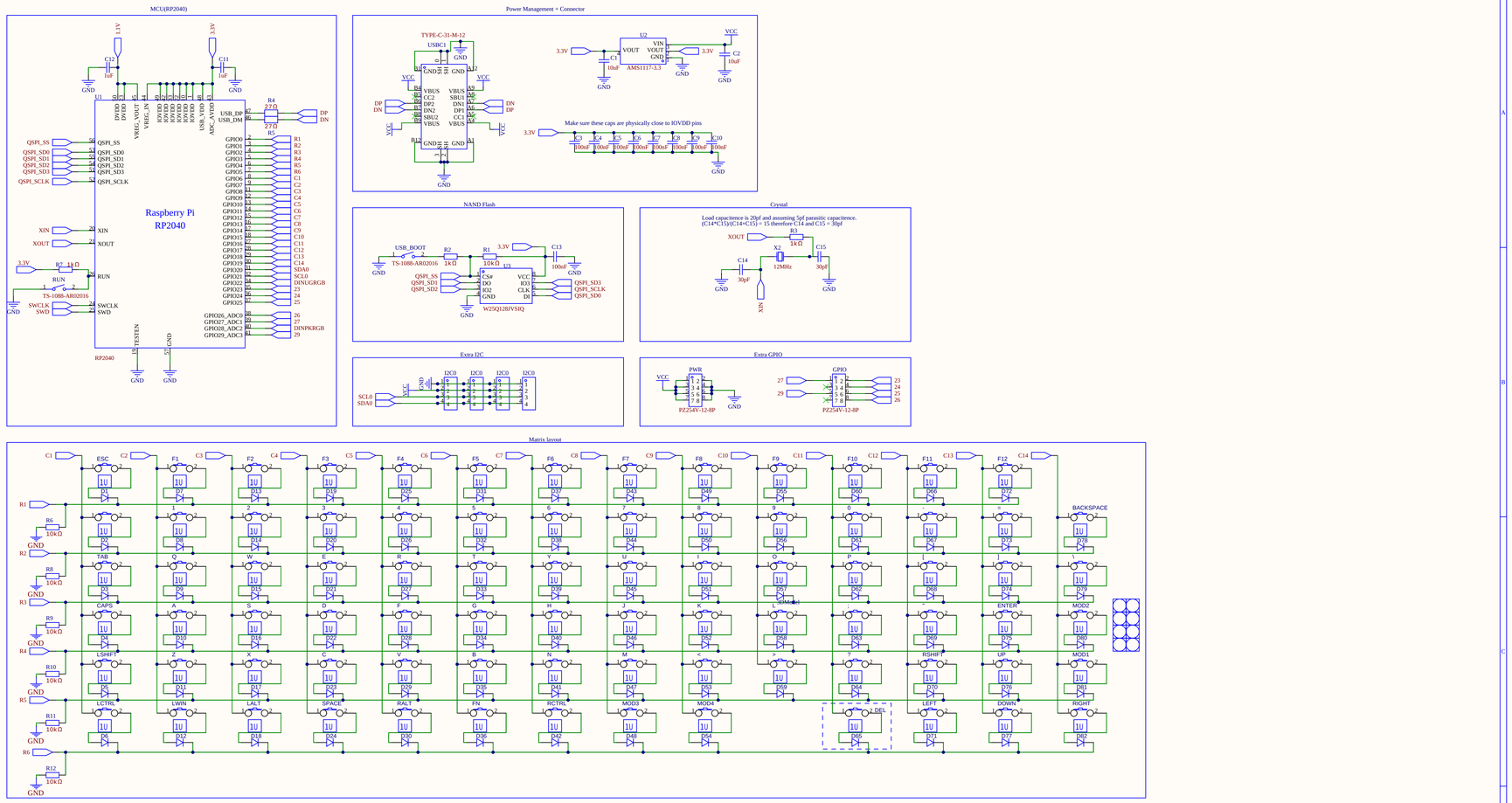

Schematic		Update Date	
		Create Date	
Page		Part Number	
Drawed			
Reviewed			
		VER	SIZE	PAGE OF

EasyEDA

Schematic1

the important stuff

2024-03-18
2023-04-20
URC75

Prash
Prash

URC merc keyboard

1 2

V1.2 A4

Per-key LED's

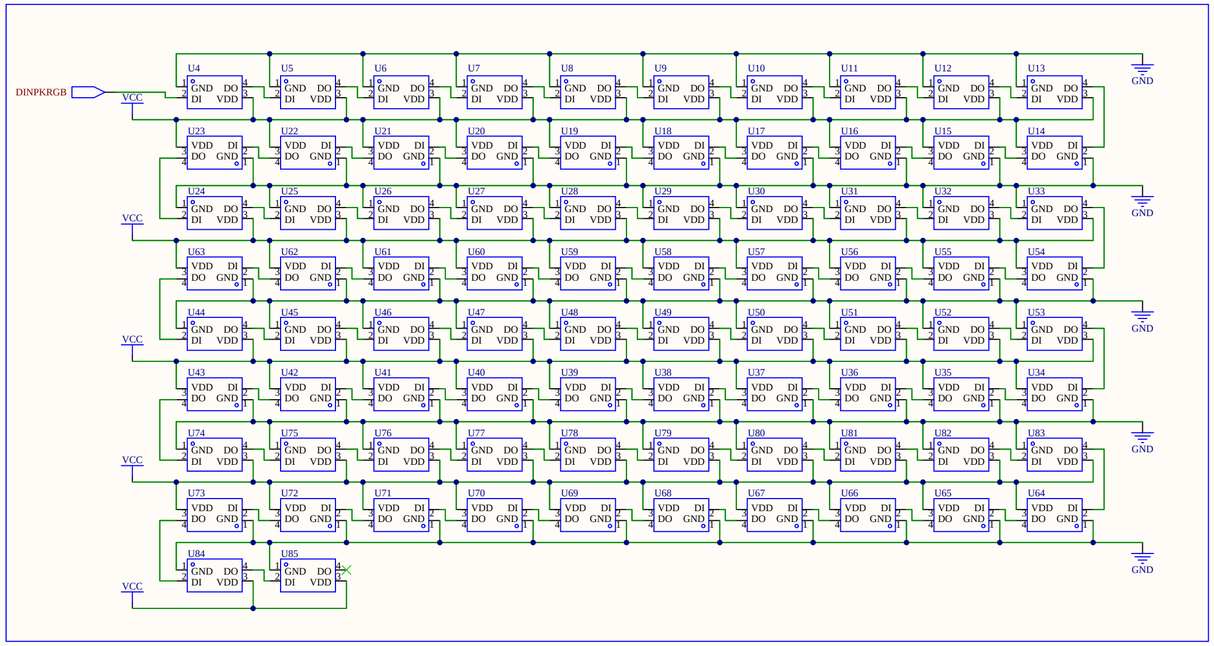

Underglow LED's

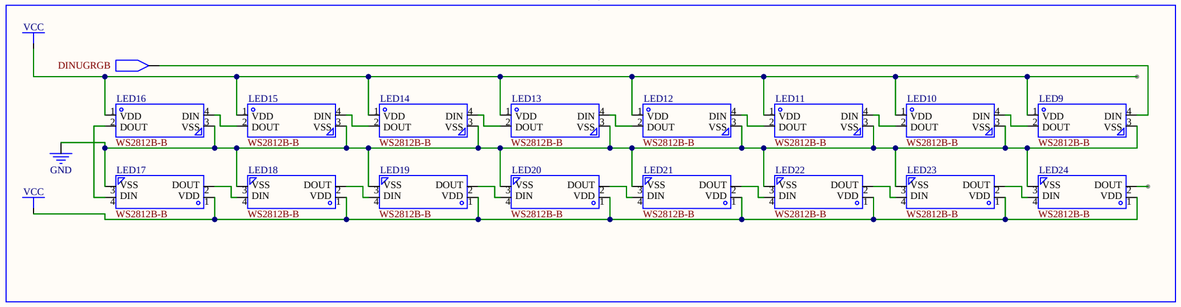

Schematic1

RGB's knees

Prash

Prash

URC merc keyboard

2 2

V0.1 A4

2024-03-18

2023-04-20

urc75

Schematic		Update Date	
		Create Date	
Page		Part Number	
Drawed			
Reviewed			
	VER	SIZE	PAGE OF

EasyEDA