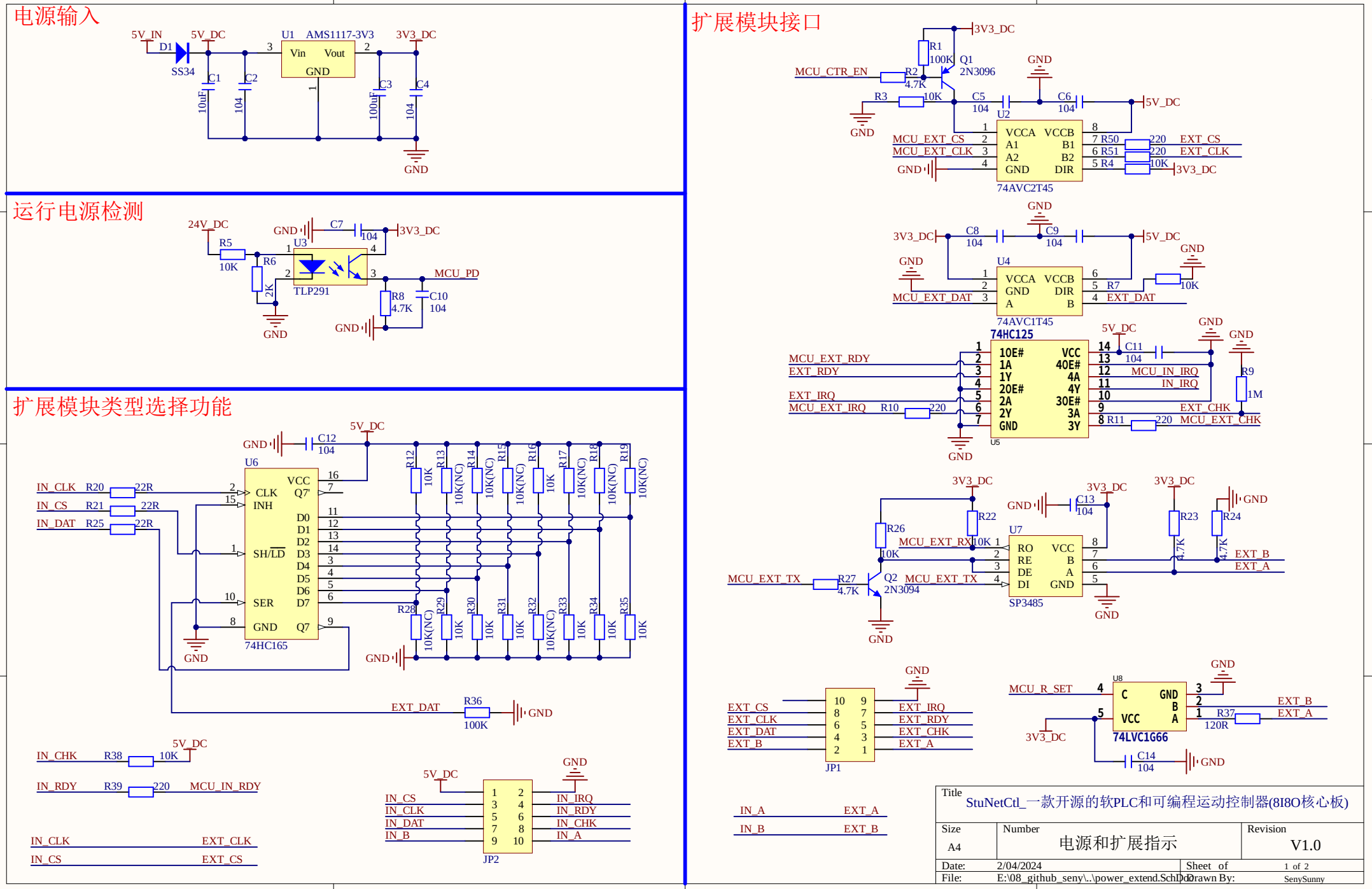
电源输入
5V_IN
5V_DC
D1
SS34
C1
10uF
C2
104
U1 AMS1117-3V3
Vin
Vout
GND
3V3_DC
C3
100uF
C4
104
GND
运行电源检测
24V_DC
R5
10K
R6
2K
GND
C7
104
3V3_DC
U3
TLP291
MCU_PD
R8
4.7K
C10
104
扩展模块类型选择功能
5V_DC
C12
104
U6
74HC165
CLK
INH
SH/LD
SER
VCC
Q7'
D0
D1
D2
D3
D4
D5
D6
D7
Q7
IN_CLK R20 22R
IN_CS R21 22R
IN_DAT R25 22R
R12 10K
R13 10K(NC)
R14 10K(NC)
R15 10K(NC)
R16 10K
R17 10K(NC)
R18 10K(NC)
R19 10K(NC)
R28 10K(NC)
R29 10K
R30 10K
R31 10K
R32 10K(NC)
R33 10K
R34 10K
R35 10K
EXT_DAT
R36
100K
IN_CHK R38 10K
IN_RDY R39 220 MCU_IN_RDY
IN_CLK EXT_CLK
IN_CS EXT_CS
JP2
IN_CS
IN_CLK
IN_DAT
IN_B
IN_IRQ
IN_RDY
IN_CHK
IN_A
扩展模块接口
3V3_DC
R1
100K
Q1
2N3096
MCU_CTR_EN
R2
4.7K
R3
10K
C5
104
C6
104
5V_DC
U2
74AVC2T45
VCCA
A1
A2
GND
VCCB
B1
B2
DIR
MCU_EXT_CS
MCU_EXT_CLK
R50 220 EXT_CS
R51 220 EXT_CLK
R4 10K
C8
104
C9
104
U4
74AVC1T45
MCU_EXT_DAT
R7 10K
EXT_DAT
74HC125
U5
MCU_EXT_RDY
EXT_RDY
EXT_IRQ
MCU_EXT_IRQ
R10 220
C11
104
MCU_IN_IRQ
IN_IRQ
R9
1M
EXT_CHK
R11 220 MCU_EXT_CHK
U7
SP3485
RO
RE
DE
DI
VCC
B
A
R26
10K
R22
10K
MCU_EXT_RX
MCU_EXT_TX
R27
4.7K
Q2
2N3094
C13
104
R23
4.7K
R24
4.7K
EXT_B
EXT_A
JP1
EXT_CS
EXT_CLK
EXT_DAT
EXT_B
EXT_IRQ
EXT_RDY
EXT_CHK
EXT_A
U8
74LVC1G66
MCU_R_SET
C
VCC
GND
B
A
R37
120R
C14
104
IN_A EXT_A
IN_B EXT_B
Title
StuNetCtl_一款开源的软PLC和可编程运动控制器(8I8O核心板)
Size
A4
Number
电源和扩展指示
Revision
V1.0
Date: 2/04/2024
Sheet of 1 of 2
File: E:\08_github_seny\..\power_extend.SchDoc
Drawn By: SenySunny

主控和调试下载

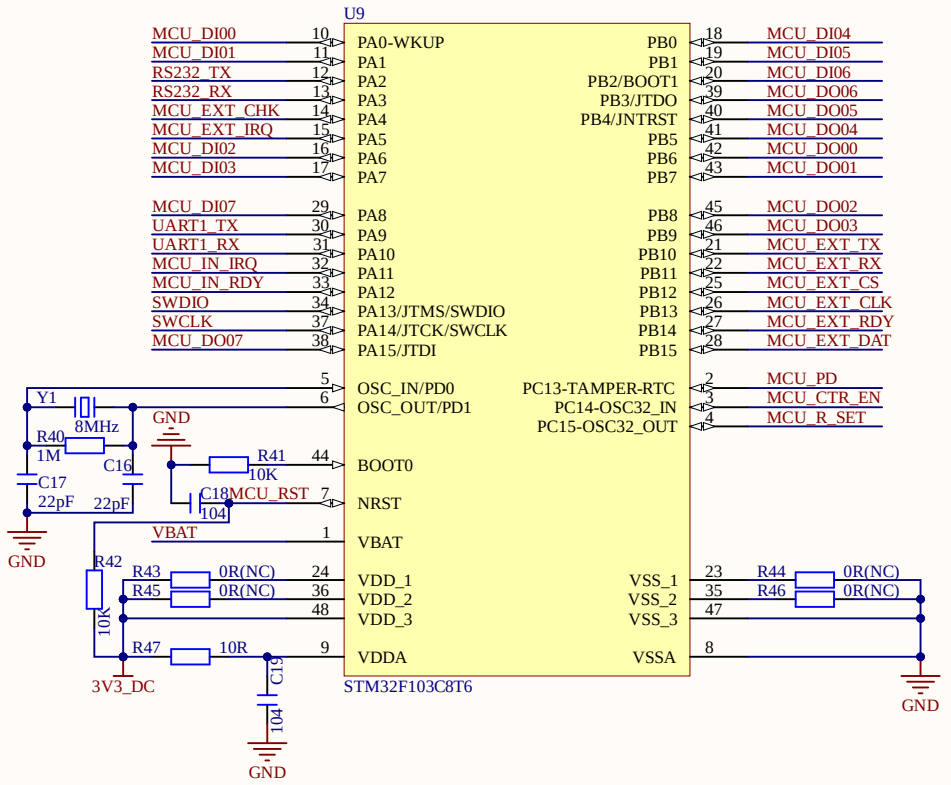

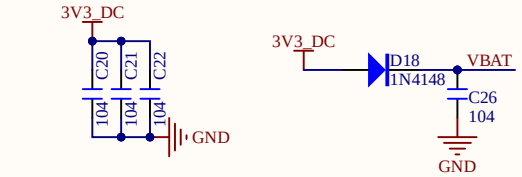

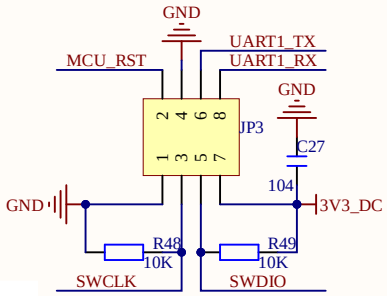

备注：
1、默认采用AT32F415，R43，R44焊接，R45，R46不焊接

2、如果采用STM32F103/AT32F403A等兼容芯片，R43，R44，R45，R46均需要焊接

DO输出

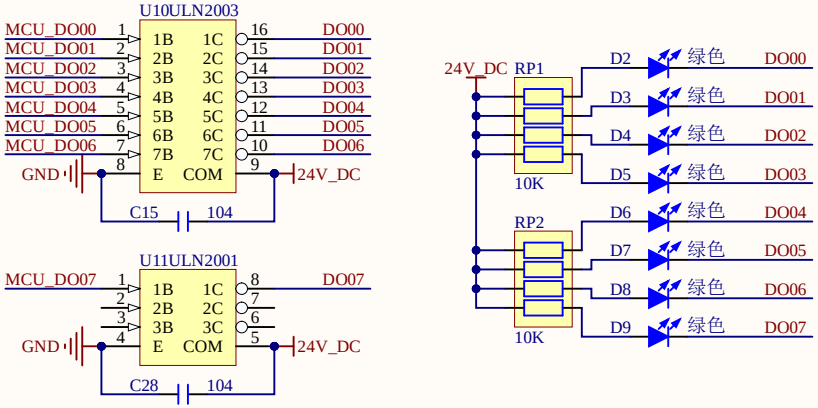

DI输入

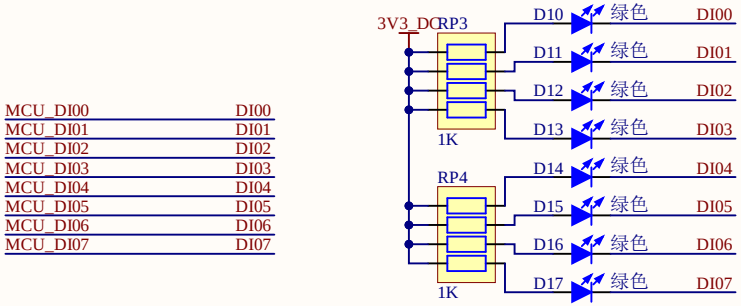

外部接插件

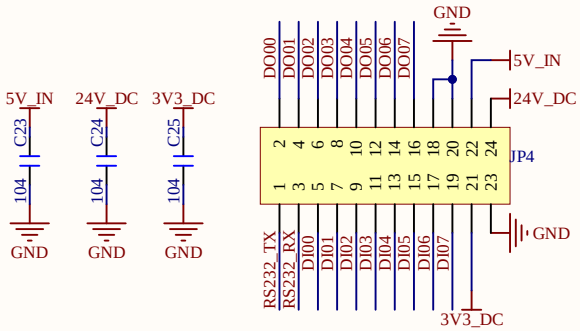

Title: StuNetCtl_一款开源的软PLC和可编程运动控制器(8I8O核心板)		
Size: A4	Number: 主控和接口	Revision: V1.0
Date: 2/04/2024	Sheet of 2 of 2	
File: E:\08_github_seny\..\ctrl_interface.SchDoc	Drawn By: SenySunny	