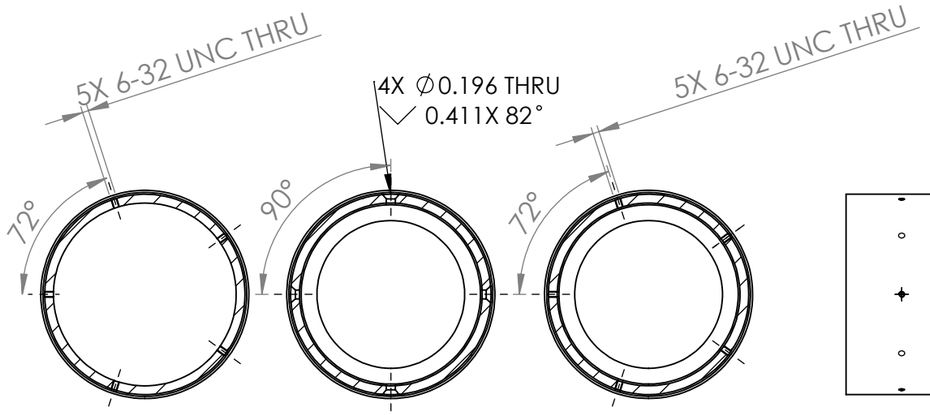

SECTION B-B
SCALE 1 : 3.5

SECTION C-C
SCALE 1 : 3.5

SECTION D-D
SCALE 1 : 3.5

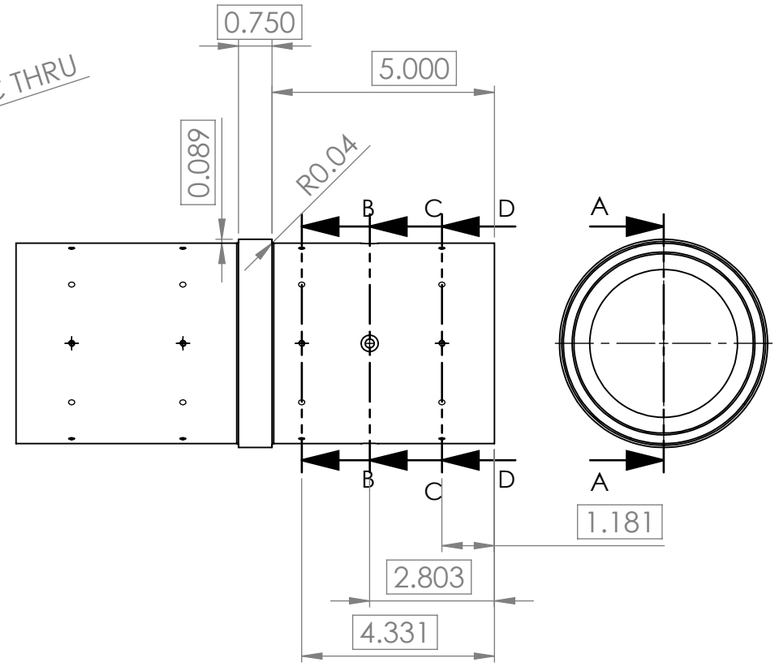

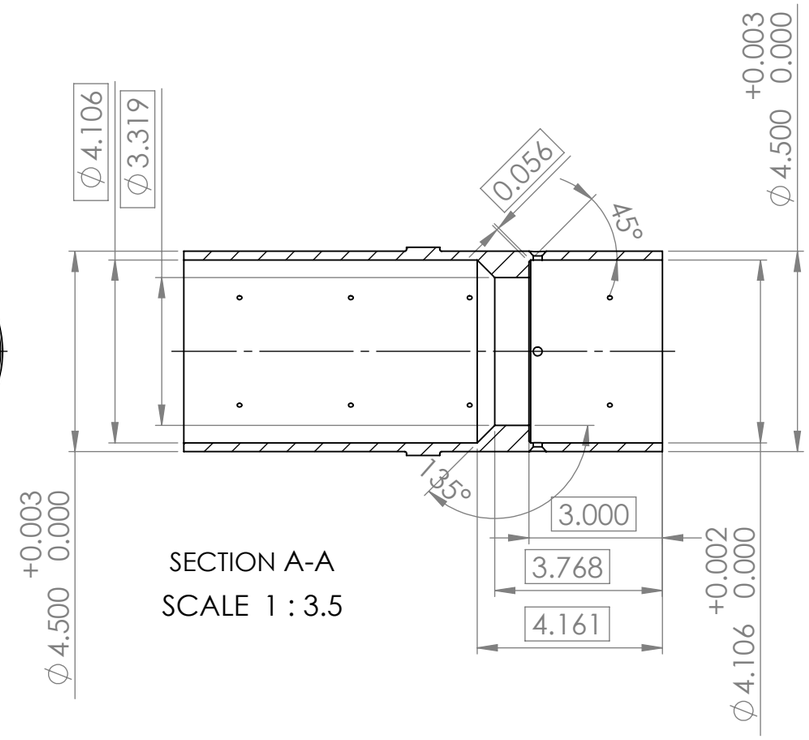

SECTION A-A
SCALE 1 : 3.5

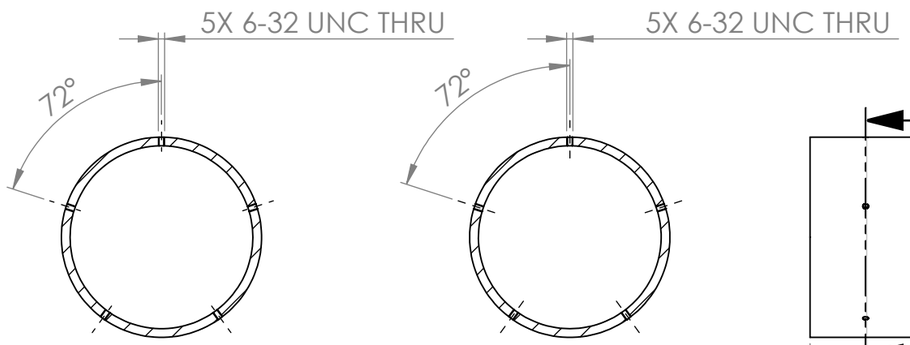

SECTION F-F

SCALE 1 : 3.5

SECTION G-G
SCALE 1 : 3.5

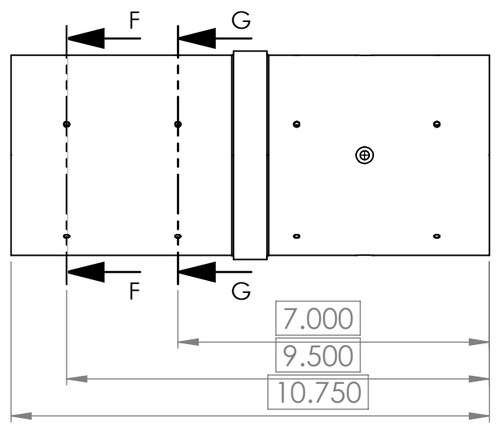

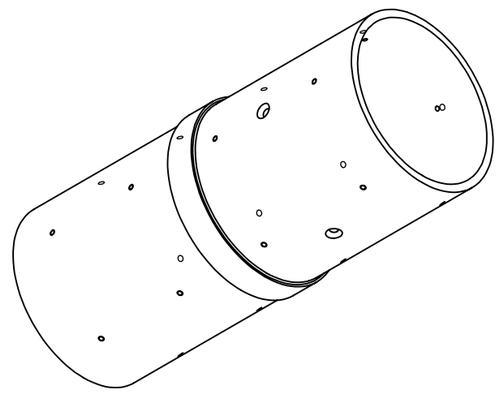

All dimensions in inches

UNLESS OTHERWISE SPECIFIED: DIMENSIONS ARE IN MILLIMETERS SURFACE FINISH: TOLERANCES: LINEAR: ANGULAR:	FINISH:			DEBURR AND BREAK SHARP EDGES			DO NOT SCALE DRAWING	REVISION
	NAME	SIGNATURE	DATE				TITLE:	
DRAWN								
CHK'D								
APPV'D								
MFG								
Q.A				MATERIAL:			DWG NO.	A3
							NFPA_MotorCoupler_MotorTube	
				WEIGHT:			SCALE:1:5	SHEET 1 OF 1

SOLIDWORKS Educational Product. For Instructional Use Only.