Padilla Fuzz

An appropriately noisy one knob fuzz for noisy times.

It feels a bit audacious to call it "Padilla." But, it doesn't make noise unless it should, and then it roars.

It just seemed apt.

I hope you dig it!
— DB

You can use other transistors. The important bits are:

- Q2 and Q3 need to be the same PNP
- Q4 and Q5 need to be the same NPN

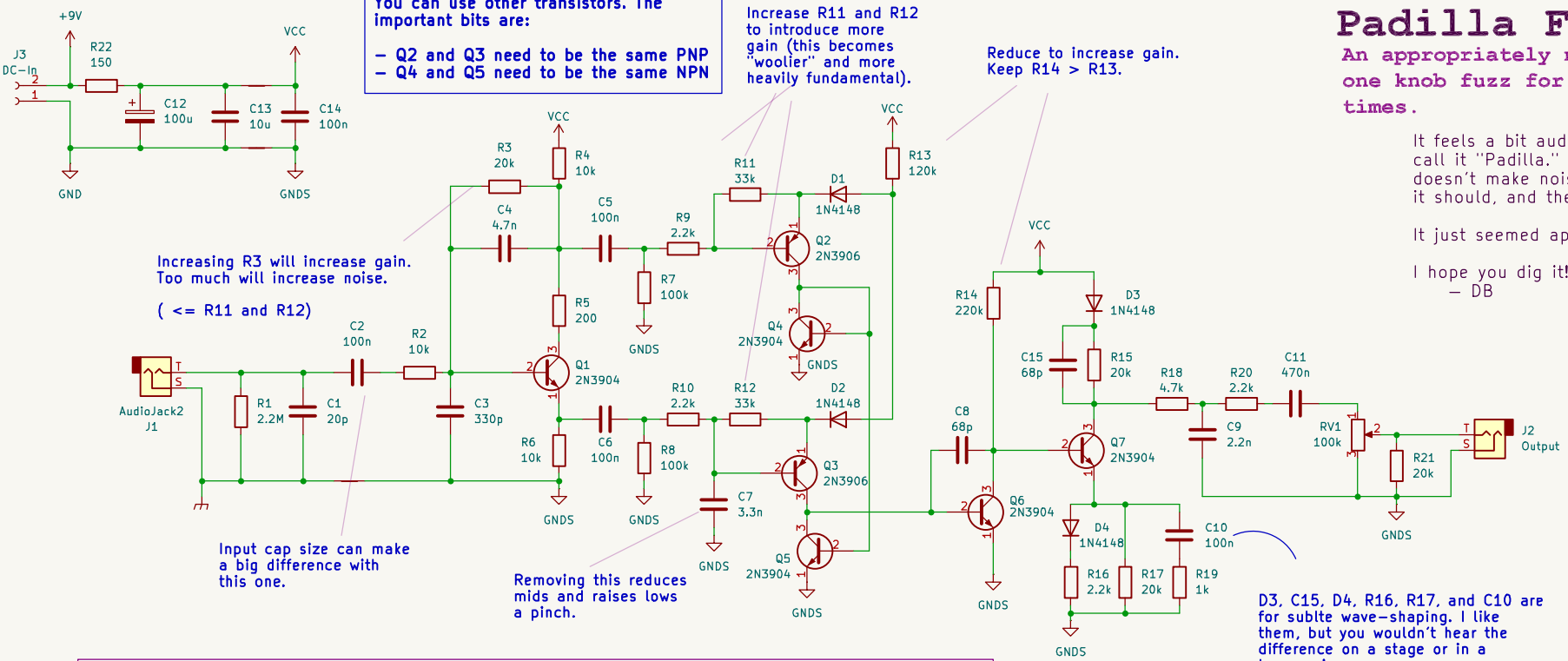

Increase R11 and R12 to introduce more gain (this becomes "woolier" and more heavily fundamental).

Reduce to increase gain. Keep R14 > R13.

Increasing R3 will increase gain. Too much will increase noise.

(<= R11 and R12)

Input cap size can make a big difference with this one.

Removing this reduces mids and raises lows a pinch.

D3, C15, D4, R16, R17, and C10 are for sublte wave-shaping. I like them, but you wouldn't hear the difference on a stage or in a heavy mix.

For an easier build and almost the same sound, you can ditch them all and just keep R14, 15, and R19.

See the alt versions for other ideas. (I actually prefer the alt version)

Alt Output:

(I like it)

(Also, C15-33n; R15=33k is nice)

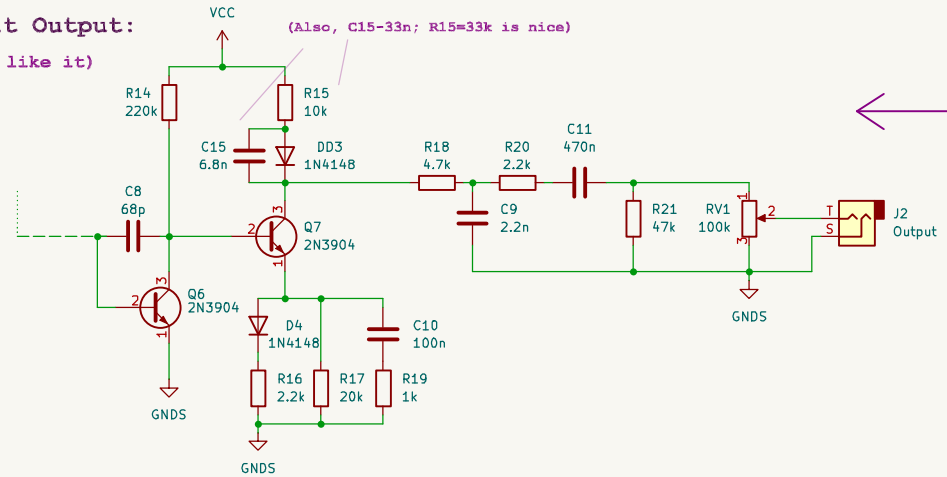

NOTE: ...it's less tolerant of ground loops than average though. If you don't mind your grounding, it might go "buuuuuuuhhhhhhhh" the whole time it's engaged.

Added (some) mod notes
Whoops. Another...around C8 + added alt output
Fixed a drawing error around C8
Quick_Butterfly_4571 (D.B.B. 2025)

Sheet: /
File: Padilla.kicad_sch

Title: Padilla Fuzz

Size: A4	Date: 2025-06-16	**Rev: v0.1.3**
KiCad E.D.A. 8.0.9		Id: 1/1