Padilla Fuzz

An appropriately noisy one knob fuzz for noisy times.

It feels a bit audacious to call it "Padilla." But, it doesn't make noise unless it should, and then it roars.

It just seemed apt.

I hope you dig it!
— DB

You can use other transistors. The important bits are:

- Q2 and Q3 need to be the same PNP
- Q4 and Q5 need to be the same NPN

NOTE: ...it's less tolerant of ground loops than average though. If you don't mind your grounding, it might go "buuuuuuuuhhhhhhhh" the whole time it's engaged.

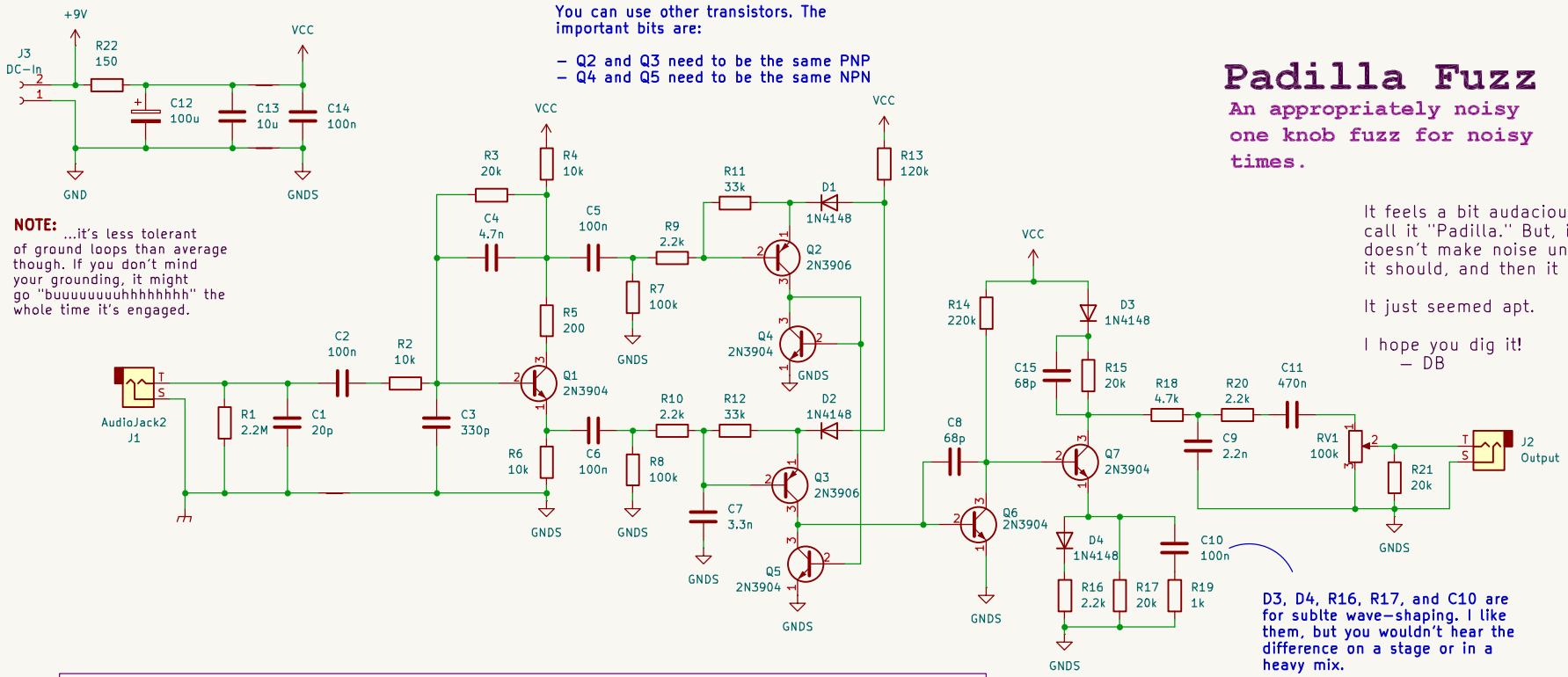

D3, D4, R16, R17, and C10 are for sublte wave-shaping. I like them, but you wouldn't hear the difference on a stage or in a heavy mix.

For an easier build and almost the same sound, you can ditch them all and just keep R14, 15, and R19.

Alt Output:

(I like it)

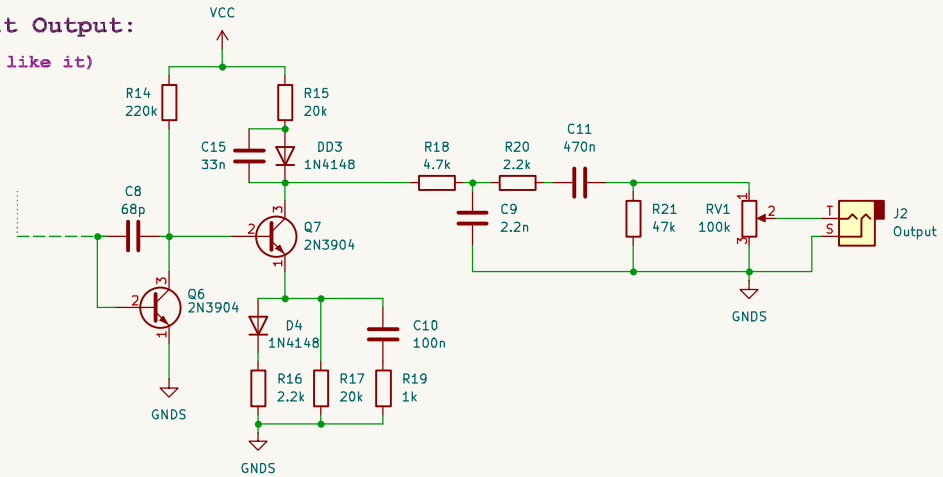

Whoops. Another...around C8 + added alt output
Fixed a drawing error around C8
Quick_Butterfly_4571 (D.B.B. 2025)

Sheet: /
File: Padilla.kicad_sch

Title: Padilla Fuzz

Size: A4	Date: 2025-06-15	Rev: v0.1.2
KiCad E.D.A. 8.0.9		Id: 1/1