Padilla Fuzz

An appropriately noisy one knob fuzz for noisy times.

It feels a bit audacious to call it "Padilla." But, it doesn't make noise unless it should, and then it roars.

It just seemed apt.

I hope you dig it!
— DB

You can use other transistors. The important bits are:

– Q2 and Q3 need to be the same PNP
– Q4 and Q5 need to be the same NPN

Increase R11 and R12 to introduce more gain (this becomes "woolier" and more heavily fundamental).

Reduce to increase gain. Keep R14 > R13.

Increasing R3 will increase gain. Too much will increase noise.

(<= R11 and R12)

Input cap size can make a big difference with this one.

Removing this reduces mids and raises lows a pinch.

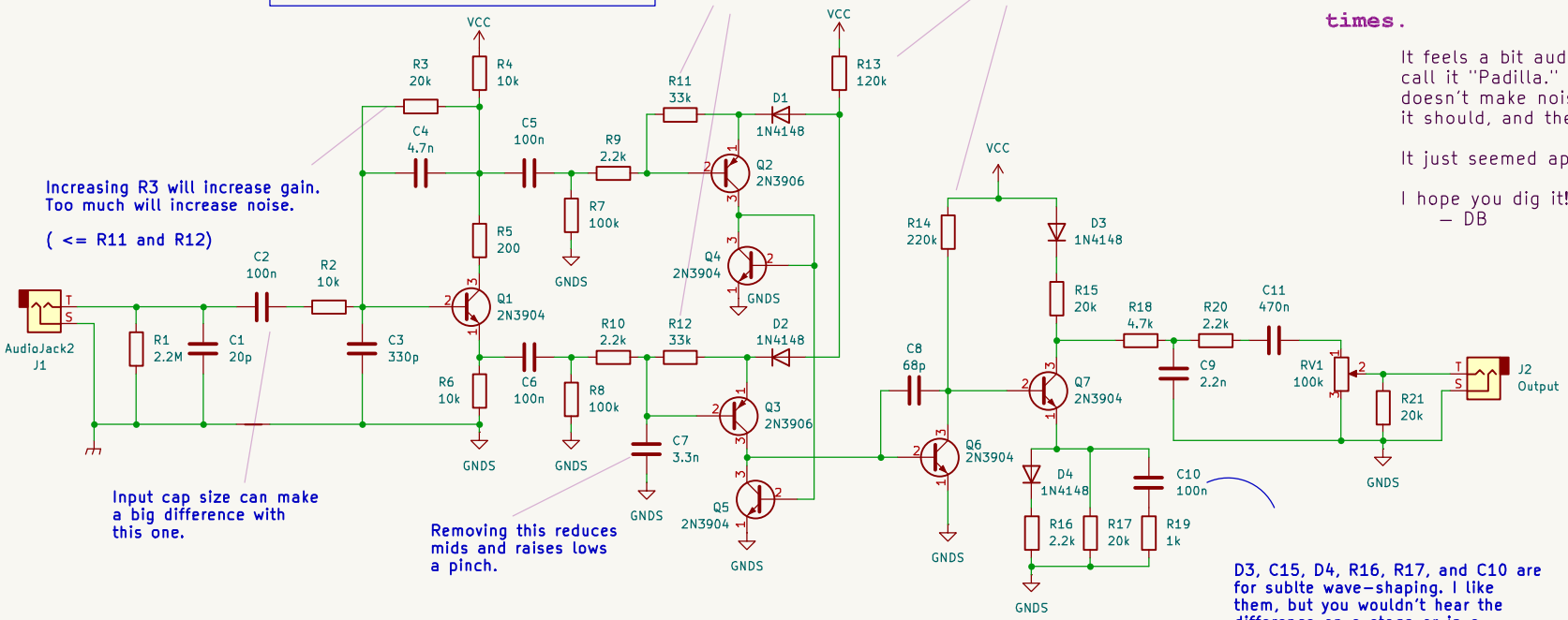

D3, C15, D4, R16, R17, and C10 are for sublte wave-shaping. I like them, but you wouldn't hear the difference on a stage or in a heavy mix.

For an easier build and almost the same sound, you can ditch them all and just keep R14, 15, and R19.

NOTE: ...it's less tolerant of ground loops than average though. If you don't mind your grounding, it might go "buuuuuuuhhhhhhhh" the whole time it's engaged.

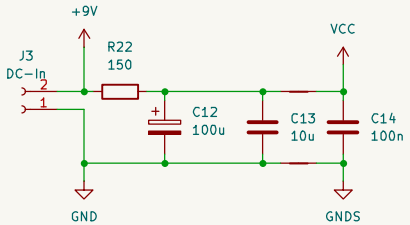

Added (some) mod notes
Whoops. Another...around C8 + added alt output
Fixed a drawing error around C8
Quick_Butterfly_4571 (D.B.B. 2025)

Sheet: /
File: Padilla_mods.kicad_sch

Title: Padilla Fuzz

Size: A4	Date: 2025-06-19	**Rev: v0.1.4-w-mods**
KiCad E.D.A. 8.0.9		Id: 1/1