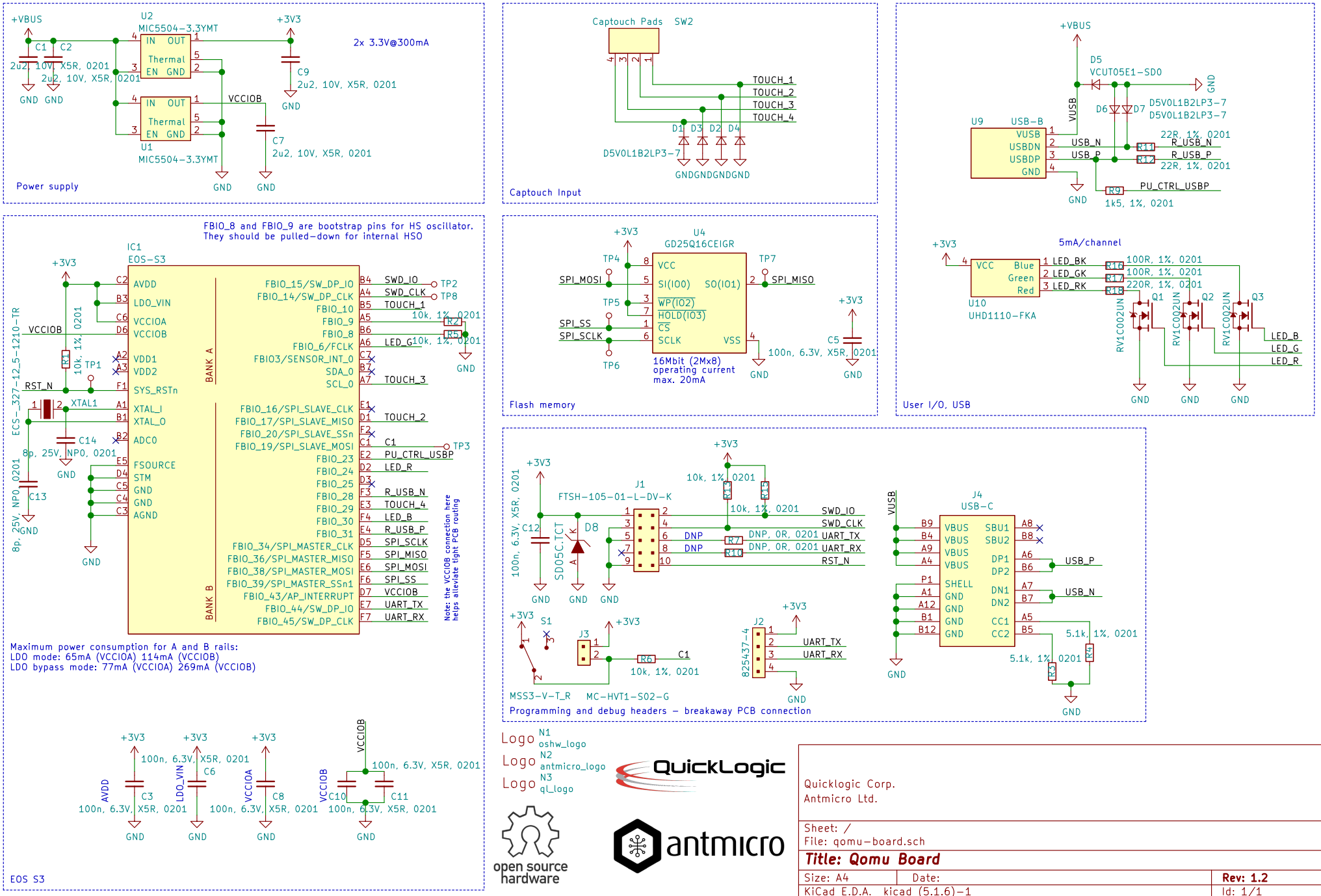
Power supply
+VBUS
U2
MIC5504-3.3YMT
IN OUT
Thermal
EN GND
+3V3
2x 3.3V@300mA
C1 2u2, 10V, X5R, 0201
C2 2u2, 10V, X5R, 0201
C9 2u2, 10V, X5R, 0201
VCCIOB
U1
MIC5504-3.3YMT
C7 2u2, 10V, X5R, 0201
GND
Captouch Input
Captouch Pads SW2
TOUCH_1
TOUCH_2
TOUCH_3
TOUCH_4
D1 D3 D2 D4
D5V0L1B2LP3-7
GND GND GND GND
User I/O, USB
D5 VCUT05E1-SD0
D6 D7 D5V0L1B2LP3-7
U9 USB-B
VUSB
USBDN
USBDP
USB_N
USB_P
R11 22R, 1%, 0201 R_USB_N
R12 22R, 1%, 0201 R_USB_P
R9 1k5, 1%, 0201 PU_CTRL_USBP
5mA/channel
U10 UHD1110-FKA
VCC Blue Green Red
LED_BK
LED_GK
LED_RK
R16 100R, 1%, 0201
R17 100R, 1%, 0201
R18 220R, 1%, 0201
Q1 Q2 Q3
RV1C002UN
LED_B
LED_G
LED_R
Flash memory
U4 GD25Q16CEIGR
VCC
SI(IO0) SO(IO1)
WP(IO2)
HOLD(IO3)
CS
SCLK VSS
SPI_MOSI
SPI_SS
SPI_SCLK
SPI_MISO
TP4 TP5 TP6 TP7
C5 100n, 6.3V, X5R, 0201
16Mbit (2Mx8)
operating current
max. 20mA
FBIO_8 and FBIO_9 are bootstrap pins for HS oscillator.
They should be pulled-down for internal HSO
IC1
EOS-S3
AVDD
LDO_VIN
VCCIOA
VCCIOB
VDD1
VDD2
SYS_RSTn
XTAL_I
XTAL_O
ADC0
FSOURCE
STM
GND
AGND
BANK A
BANK B
FBIO_15/SW_DP_IO
FBIO_14/SW_DP_CLK
FBIO_10
FBIO_9
FBIO_8
FBIO_6/FCLK
FBIO3/SENSOR_INT_0
SDA_0
SCL_0
FBIO_16/SPI_SLAVE_CLK
FBIO_17/SPI_SLAVE_MISO
FBIO_20/SPI_SLAVE_SSn
FBIO_19/SPI_SLAVE_MOSI
FBIO_23
FBIO_24
FBIO_25
FBIO_28
FBIO_29
FBIO_30
FBIO_31
FBIO_34/SPI_MASTER_CLK
FBIO_36/SPI_MASTER_MISO
FBIO_38/SPI_MASTER_MOSI
FBIO_39/SPI_MASTER_SSn1
FBIO_43/AP_INTERRUPT
FBIO_44/SW_DP_IO
FBIO_45/SW_DP_CLK
SWD_IO
SWD_CLK
TOUCH_1
LED_G
TOUCH_3
TOUCH_2
C1
PU_CTRL_USBP
LED_R
R_USB_N
TOUCH_4
LED_B
R_USB_P
SPI_SCLK
SPI_MISO
SPI_SS
VCCIOB
UART_TX
UART_RX
TP1 TP2 TP3 TP8
R2 10k, 1%, 0201
R5 10k, 1%, 0201
R1 10k, 1%, 0201
RST_N
XTAL1
C14 8p, 25V, NP0, 0201
C13 8p, 25V, NP0, 0201
ECS-_327-12.5-1210-TR
Note: the VCCIOB connection here helps alleviate tight PCB routing
Maximum power consumption for A and B rails:
LDO mode: 65mA (VCCIOA) 114mA (VCCIOB)
LDO bypass mode: 77mA (VCCIOA) 269mA (VCCIOB)
EOS S3
C3 100n, 6.3V, X5R, 0201
C6 100n, 6.3V, X5R, 0201
C8 100n, 6.3V, X5R, 0201
C10 100n, 6.3V, X5R, 0201
C11 100n, 6.3V, X5R, 0201
Programming and debug headers – breakaway PCB connection
J1 FTSH-105-01-L-DV-K
C12 100n, 6.3V, X5R, 0201
D8 SD05C.TCT
R13 10k, 1%, 0201
R15 10k, 1%, 0201
R7 DNP, 0R, 0201
R10 DNP, 0R, 0201
S1 MSS3-V-T_R
J3 MC-HVT1-S02-G
R6 10k, 1%, 0201
J2 825437-4
J4 USB-C
VBUS
SHELL
DP1 DP2
DN1 DN2
CC1 CC2
SBU1 SBU2
R3 5.1k, 1%, 0201
R4 5.1k, 1%, 0201
Logo N1 oshw_logo
Logo N2 antmicro_logo
Logo N3 ql_logo
QuickLogic
open source hardware
antmicro
Quicklogic Corp.
Antmicro Ltd.
Sheet: /
File: qomu-board.sch
Title: Qomu Board
Size: A4
Date:
Rev: 1.2
KiCad E.D.A. kicad (5.1.6)-1
Id: 1/1