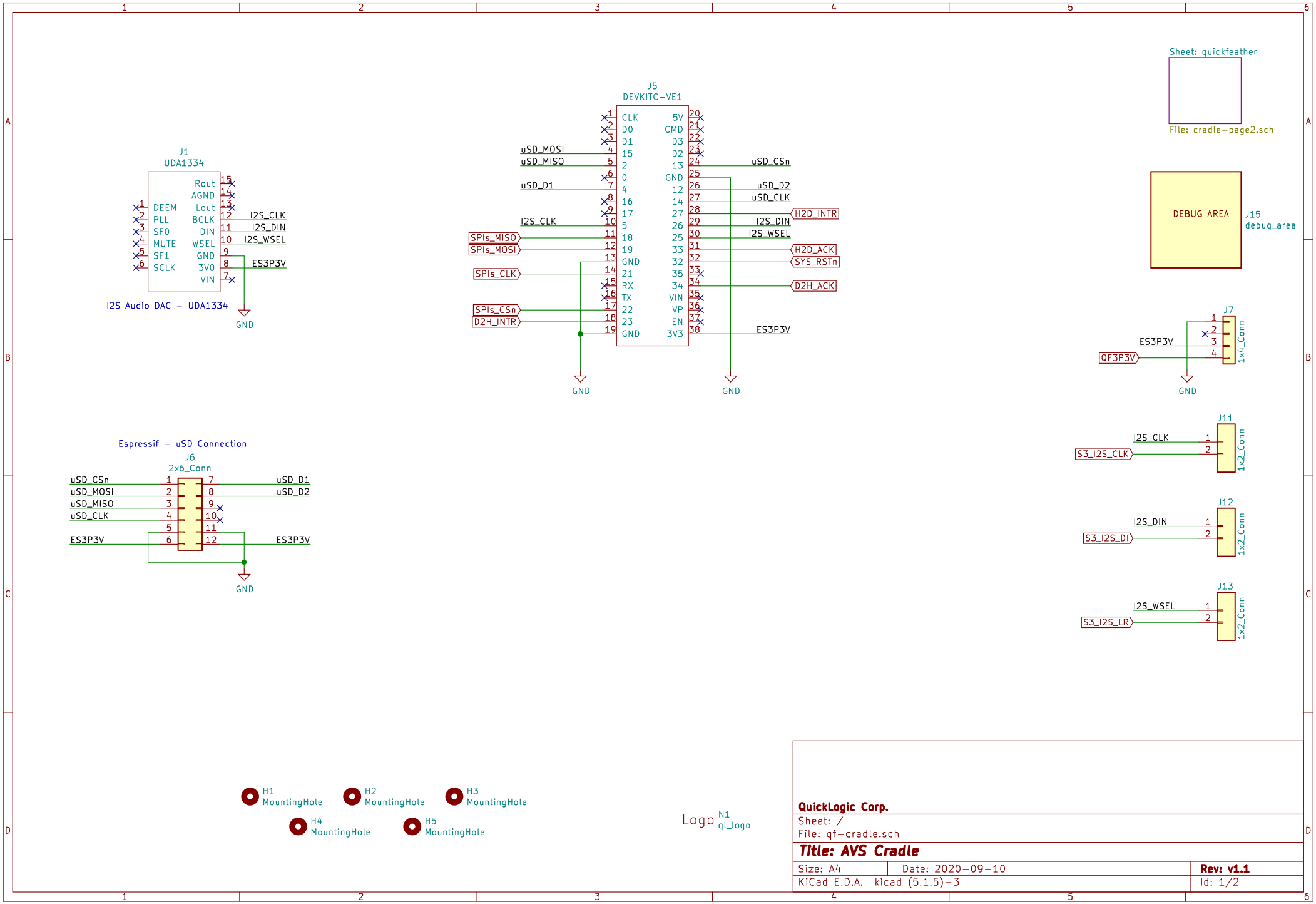
Sheet: quickfeather
File: cradle-page2.sch
J1
UDA1334
DEEM
PLL
SFO
MUTE
SF1
SCLK
Rout
AGND
Lout
BCLK
DIN
WSEL
GND
3V0
VIN
I2S_CLK
I2S_DIN
I2S_WSEL
ES3P3V
GND
I2S Audio DAC - UDA1334
J5
DEVKITC-VE1
uSD_MOSI
uSD_MISO
uSD_D1
I2S_CLK
SPIs_MISO
SPIs_MOSI
SPIs_CLK
SPIs_CSn
D2H_INTR
uSD_CSn
uSD_D2
uSD_CLK
H2D_INTR
I2S_DIN
I2S_WSEL
H2D_ACK
SYS_RSTn
D2H_ACK
ES3P3V
GND
GND
DEBUG AREA
J15
debug_area
J7
ES3P3V
QF3P3V
1x4_Conn
GND
Espressif - uSD Connection
J6
2x6_Conn
uSD_CSn
uSD_MOSI
uSD_MISO
uSD_CLK
ES3P3V
uSD_D1
uSD_D2
ES3P3V
GND
J11
I2S_CLK
S3_I2S_CLK
1x2_Conn
J12
I2S_DIN
S3_I2S_DI
1x2_Conn
J13
I2S_WSEL
S3_I2S_LR
1x2_Conn
H1
MountingHole
H2
MountingHole
H3
MountingHole
H4
MountingHole
H5
MountingHole
Logo
N1
ql_logo
QuickLogic Corp.
Sheet: /
File: qf-cradle.sch
Title: AVS Cradle
Size: A4
Date: 2020-09-10
Rev: v1.1
KiCad E.D.A. kicad (5.1.5)-3
Id: 1/2

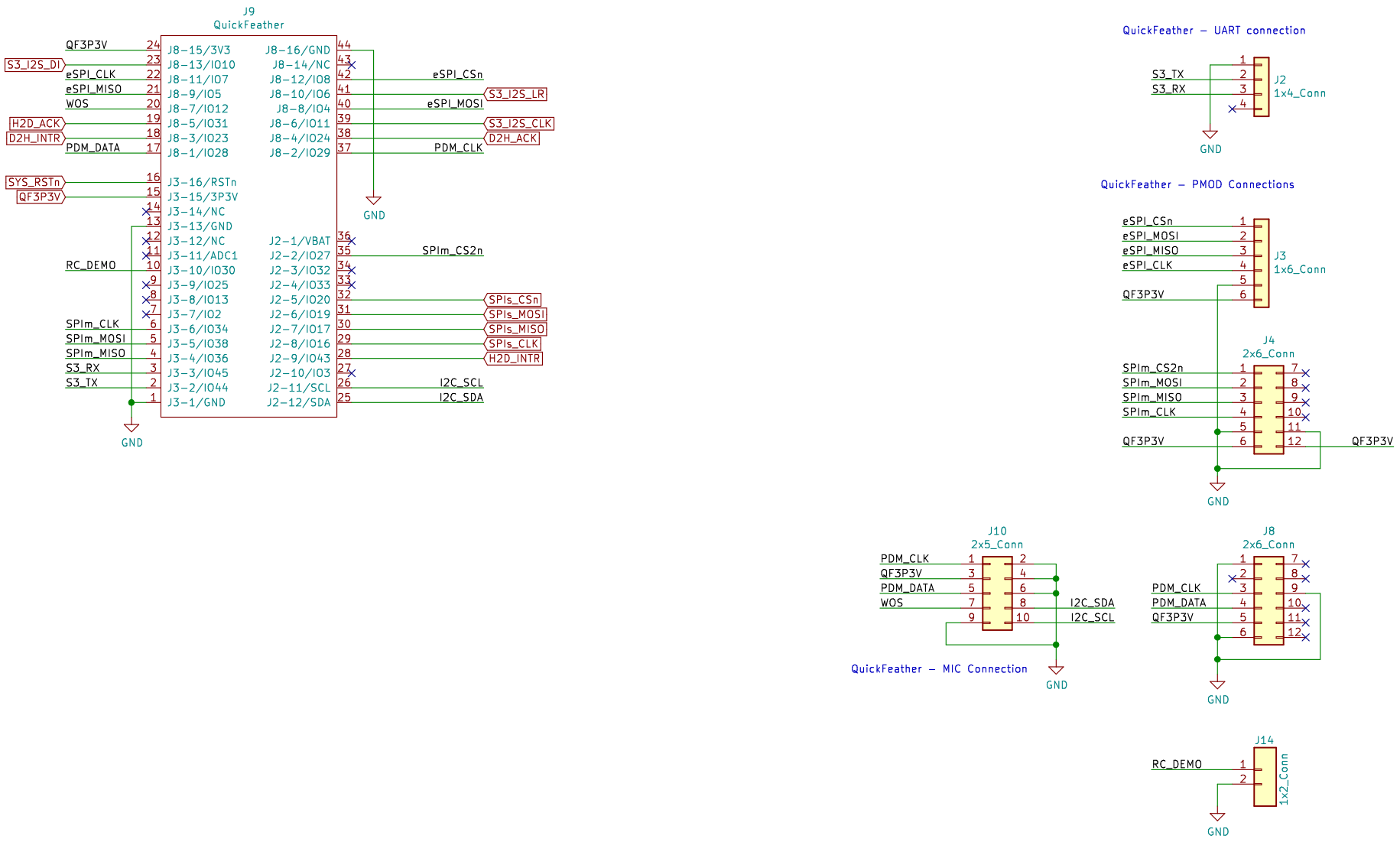

QuickLogic Corp.

Sheet: /quickfeather/
File: cradle-page2.sch

Title: AVS Cradle

Size: A4	Date: 2020-09-10	**Rev: v1.1**
KiCad E.D.A. kicad (5.1.5)-3		Id: 2/2