Electronics 1: Homework #1

Yousef Alaa Awad

February 4, 2026

1.34

A) A germanium pn junction has a diode current of $I_D = 1.5mA$ when biased at $V_D = 0.30V$. What is the reverse bias saturation current?

First we must find out the general formula for I_S.

$$I_D = I_S * (e^{\frac{V_D}{V_T}} - 1) \rightarrow I_S = \frac{I_D}{e^{\frac{V_D}{V_T}} - 1}$$

After that, now we can substitute our numbers and simply solve!

$$I_S = \frac{I_D}{e^{\frac{V_D}{V_T}} - 1} \rightarrow I_S = \frac{1.5 * 10^{-3}}{e^{\frac{0.30}{0.026}} - 1} \approx 1.462 * 10^{-8} A \rightarrow 14.62nA$$

B) Using the results of part A, determine the diode current when the diode is biased at the following values.

VD = 0.35V

$$I_S = \frac{I_D}{e^{\frac{V_D}{V_T}} - 1} \rightarrow I_S = \frac{1.462 * 10^{-8}}{e^{\frac{0.35}{0.026}} - 1} \approx 10.3 * 10^{-3} A \rightarrow 10.3mA$$

VD = 0.25V

$$I_S = \frac{I_D}{e^{\frac{V_D}{V_T}} - 1} \rightarrow I_S = \frac{1.462 * 10^{-8}}{e^{\frac{0.25}{0.026}} - 1} \approx 2.19 * 10^{-4} A \rightarrow 0.219mA$$

1.42

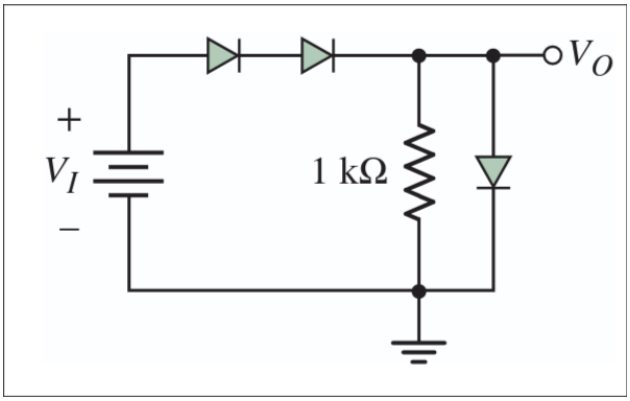

Figure 1: P1.42 from the textbook

A) The reverse saturation current of each diode in the circuit shown in Figure P1.42 is $I_S = 6 * 10^{-14} A$. Determine the input voltage V_I required to produce an output voltage of $V_O = 0.635V$.

$$I_{D3} = (6 * 10^{-14}) * e^{\frac{0.635}{0.026}} = 2.426mA$$

$$I_R = \frac{0.635}{1} = 0.635mA$$

$$I_{D1} = I_{D2} = 2.426 + 0.635 = 3.061mA$$

$$V_{D1} = V_{D2} = 0.026 * ln(\frac{0.003061}{6 * 10^{-14}}) = 0.641044V$$

$$V_{in} = 2 * V_D + V_O = 2 * (0.664044) + 0.635 = 1.917V$$

B) Repeat part A if the 1 kΩ resistor is changed to $R = 500\Omega$.

$$I_{D3} = I_S * (e^{\frac{V_O}{V_t}} - 1) = 6 * 10^{-14} * (e^{\frac{0.635}{0.026}} - 1) = 0.002426A$$

$$I_R = \frac{V_O}{R_1} = \frac{0.635}{500} = 0.001270A$$

$$I_{in} = I_R + I_{D3} = 0.003696A = I_D$$

$$V_D = V_T * ln(\frac{I_D}{I_S}) = 0.026 * ln(\frac{0.003061}{6 * 10^{-14}}) = 0.645945V$$

$$V_in = 2 * V_D + V_O = 2 * (0.645645) + 0.635 = 1.9269V$$

1.45

The diode cut in voltage is $V_y = 0.7V$ for the circuits shown in Figure P1.45. Plot V_O and I_D versus I_i over the range $0 \leq I_i \leq 2mA$ for the circuit shown in the following figures.

A)

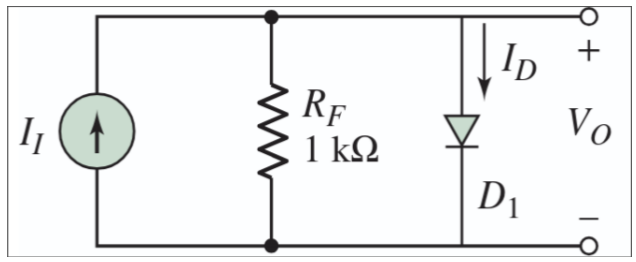

Figure 2: P1.45a from the textbook

$$V_O = \begin{cases} I_i, & 0 \leq I_i \leq 0.7mA \\ 0.7, & I_i \geq 0.7mA \end{cases}$$

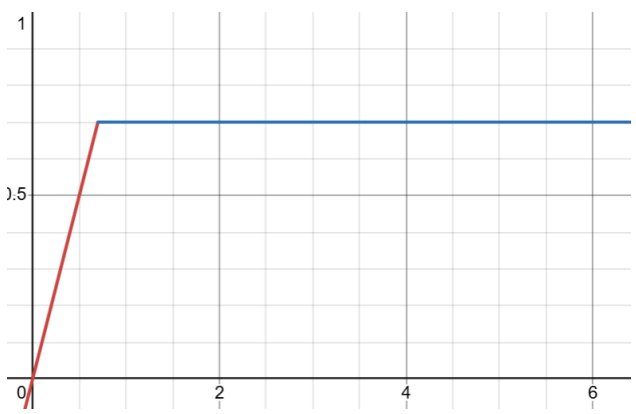

Figure 3: Plot of V_O

$$I_D = \begin{cases} 0, & 0 \leq I_i \leq 0.7mA \\ I_i - 0.7, & I_i \geq 0.7mA \end{cases}$$

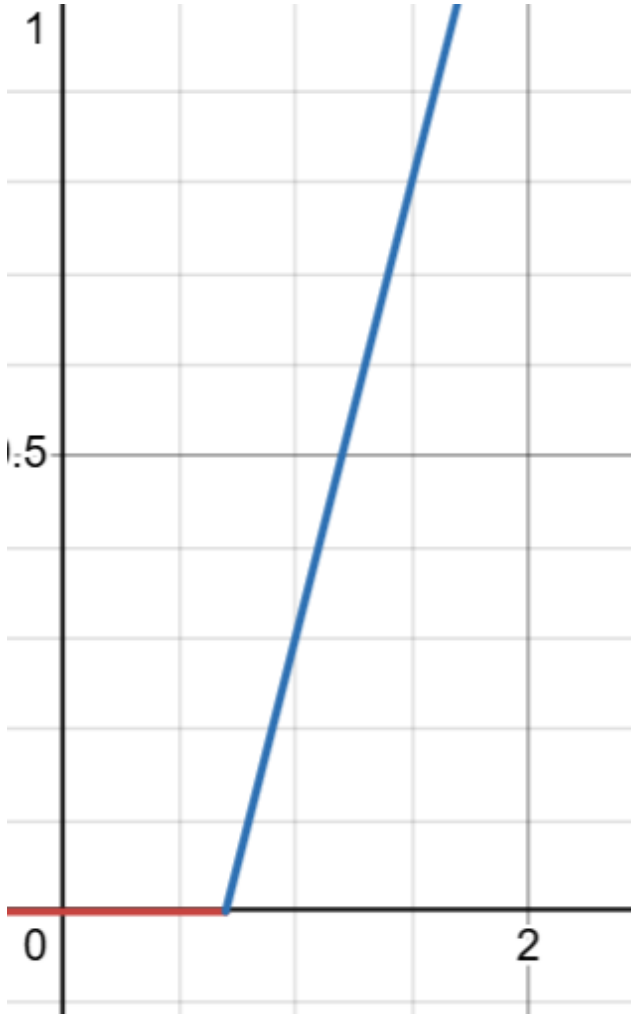

Figure 4: Plot of I_D

B)

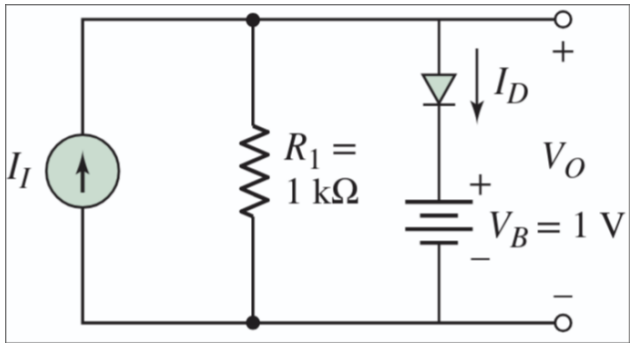

Figure 5: P1.45b from the textbook

$$V_O = \begin{cases} I_i, & 0 \leq I_i \leq 1.7mA \\ 1.7, & I_i \geq 1.7mA \end{cases}$$

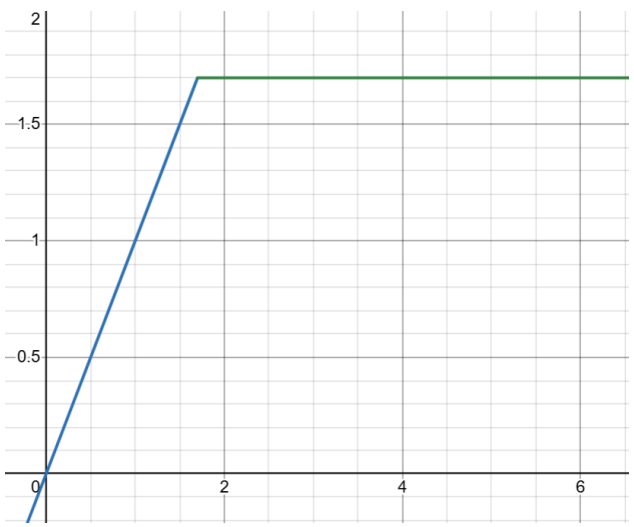

Figure 6: Plot of V_O

$$I_D = \begin{cases} 0, & 0 \leq I_i \leq 1.7mA \\ I_i - 1.7, & I_i \geq 1.7mA \end{cases}$$

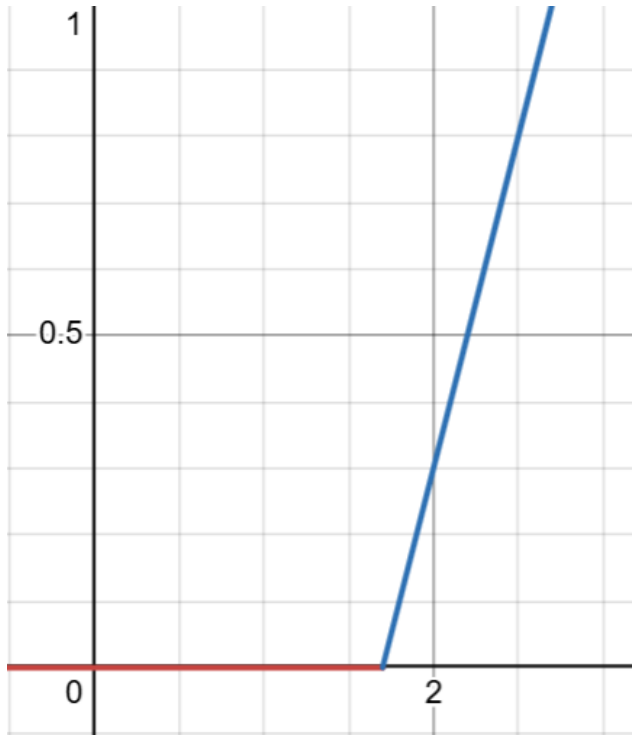

Figure 7: Plot of I_D

C)

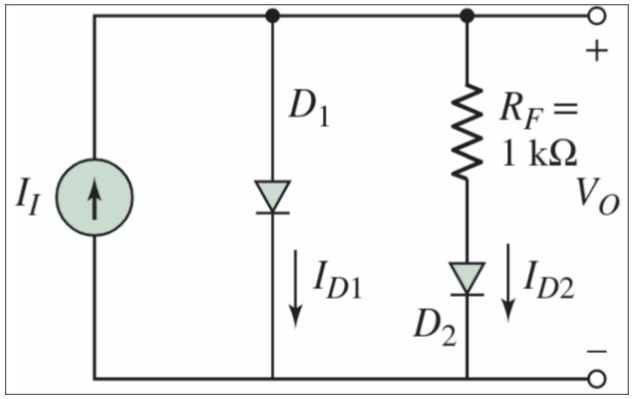

Figure 8: P1.45c from the textbook

$$V_O = \begin{cases} 0, & for\ all\ I_i \end{cases}$$

Figure 9: Plot of V_O

$$I_D = \begin{cases} 0, & for\ all\ I_i \end{cases}$$

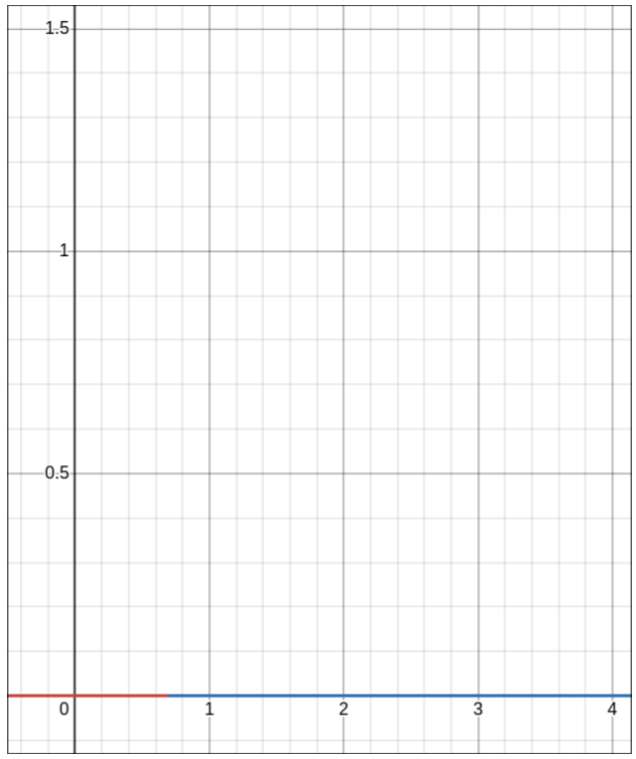

Figure 10: Plot of I_D

1.50

Assume each diode in the circuit shown in Figure P1.50 has a cut in voltage of $V_y = 0.65V$.

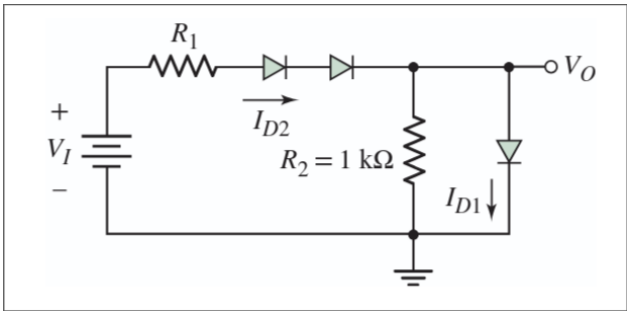

Figure 11: P1.50 from the textbook

A) The input voltage is $V_I = 5V$. Determine the value of R_1 required such that I_{D1} is one half the value of I_{D2}. What are the values of I_{D1} and I_{D2}?

$$I_{D1} = \frac{I_{D2}}{R_2} = \frac{0.65A}{1k\Omega} = 6.5 * 10^{-4} = 0.65mA$$

Given:

$$I_{D1} = \frac{I_D 2}{2} \rightarrow I_{D2} = 6.5 * 10^{-4} * 2 = 1.3 * 10^{-4} = 1.3mA$$

Therefore...

$$5 - 0.0013 * R_1 - 1.3 - 0.65 = 0 \rightarrow R_1 = 2346.15\Omega = 2.346k\Omega$$

B) If $V_I = 8V$ and $R1 = 2\Omega$, determine I_{D1} and I_{D2}.

$$8V - V_{R1} - 2 * 0.65 - V_O = 0 \rightarrow$$

$$8V - I_{D2} * R_1 1.3 - V_O = 0 \rightarrow$$

$$I_{D1} = I_{D2} - I_R \rightarrow$$

Therefore...

$$I_{D2} = \frac{8 - 2 * 0.65 - 0.65}{2} = 3.025mA$$

$$I_{D1} = I_{D2} - I_{R2} = 3.025 - \frac{0.65}{1000} = 2.375mA$$

1.51

I will assume that n = 1 for the following math.

A) Consider a pn junction diode biased at $I_{DQ} = 1mA$. A sinusoidal voltage is superimposed on V_{DQ} such that the peak to peak sinusoidal current is $0.05 * I_{DQ}$. Find the value of the applied peak to peak sinusoidal voltage.

Given:

$$I_{DQ} = 1mA$$

$$I_{pp} = 0.05 * I_{DQ} = 0.05mA$$

Now, we do the following math (assuming the resistor is R_d):

$$R_d = \frac{V_T}{I_{DQ}} = \frac{0.026}{0.001} = 26\Omega$$

And now we can use Ohm's law to find V_{pp}:

$$V_{pp} = I_{pp} * R_d = 0.05 * 26 = 1.30mV$$

B) Repeat part A assuming $I_{DQ} = 0.1mA$.

$$I_{DQ} = 0.1mA$$

$$I_{pp} = 0.05 * I_{DQ} = 0.005mA$$

Now, we do the following math (assuming the resistor is R_d):

$$R_d = \frac{V_T}{I_{DQ}} = \frac{0.026}{0.0001} = 260\Omega$$

And now we can use Ohm's law to find V_{pp}:

$$V_{pp} = I_{pp} * R_d = 0.005 * 260 = 1.30mV$$