Electronics 1: Homework #2

Yousef Alaa Awad

February 16, 2026

2.9

Consider the circuits shown in Figure P2.9. Each diode cut-in voltage is $V_\gamma = 0.7\ Volts$

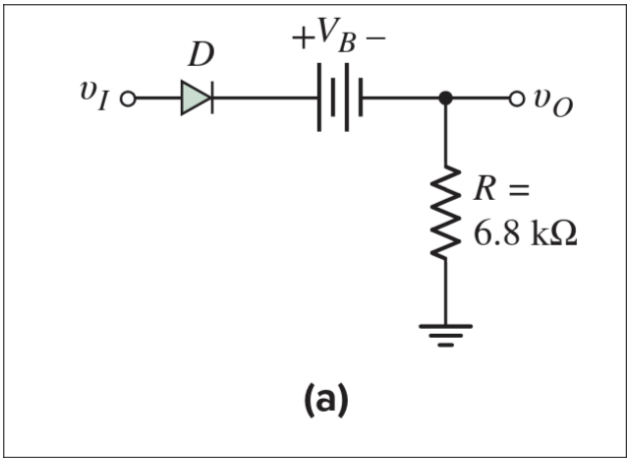

Figure 1: P2.9 from the textbook

A) Plot v_o versus v_I over the range $-10 \leq v_I \leq +10$ V for the circuit in Figure P2.9(a) for...

i) $V_B = 5V$

First we must calculate V_I by doing the following:

$$V_I - V_\gamma - V_B = V_o \rightarrow V_I = V_o + V_\gamma + V_B = 0 + 5 + 0.7 = 5.7$$

BUT, V_I is only that while it is below the cut-in voltage, meaning that while $V_I < 5.7$, $V_o = 0$.

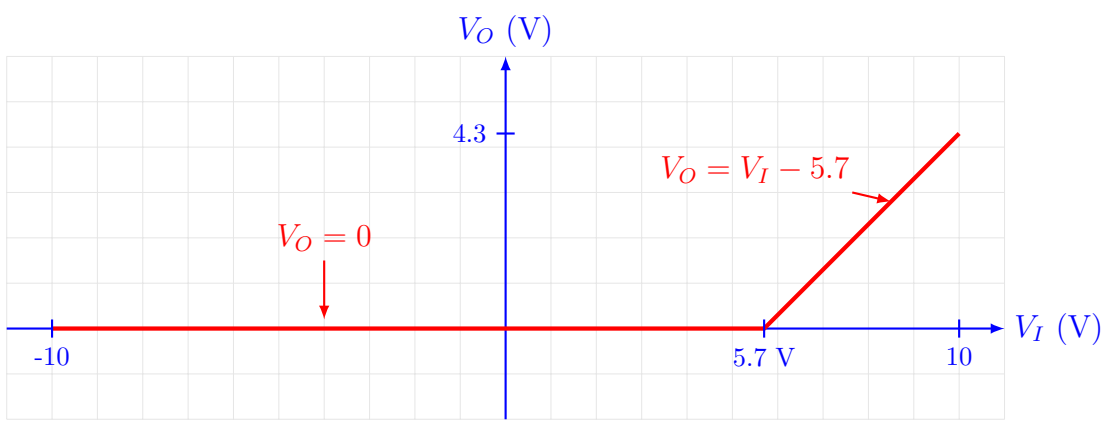

Figure 2: Transfer characteristic curve.

ii) $V_B = -5V$

First we must calculate V_I by doing the following:

$$V_I - V_\gamma - V_B = V_o \rightarrow V_I = V_o + V_\gamma + V_B = 0 + 5 + (-0.7) = 4.3$$

BUT, V_I is only that while it is below the cut-in voltage, meaning that while $V_I < -4.3$, $V_o = 0$.

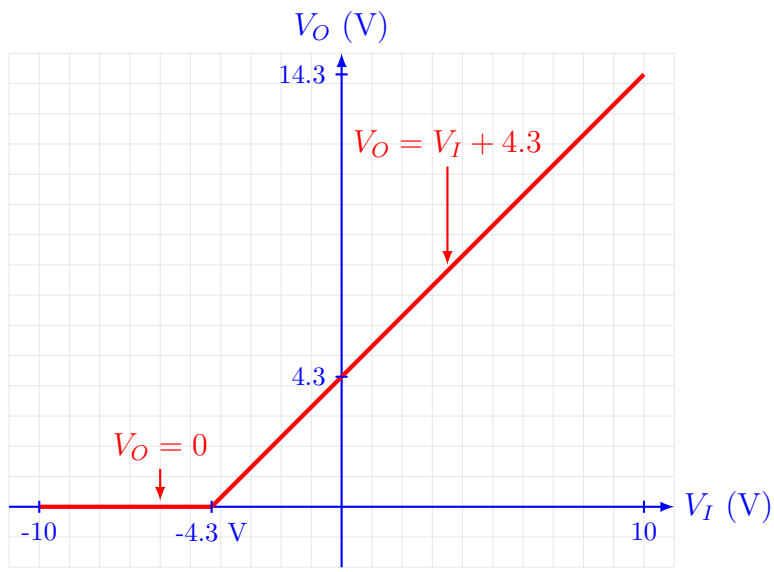

Figure 3: Transfer characteristic curve.

B) Repeat part A for the circuit in Figure P2.9(b)

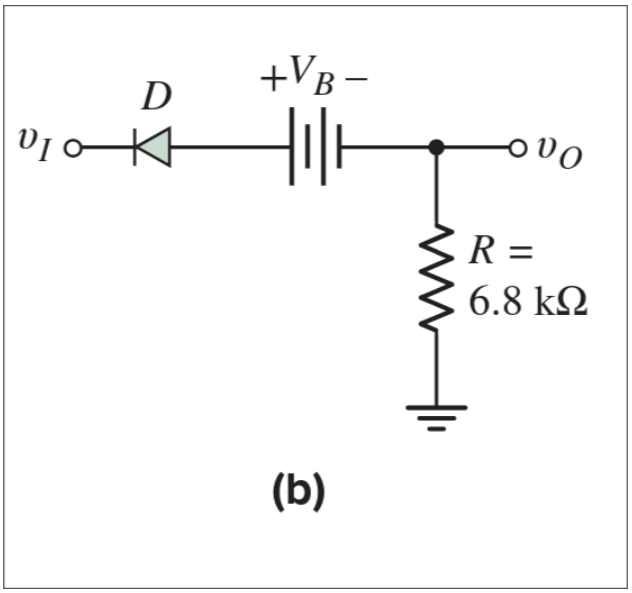

Figure 4: P2.9(b) from the textbook

i) $V_B = 5V$

First we must calculate V_I by doing the following:

$$V_I - V_\gamma + V_B = V_o \rightarrow V_I = V_o + V_\gamma - V_B = 0 + 5 - 0.7 = 4.3$$

BUT, V_I is only that while it is below the cut-in voltage, meaning that while $V_I > 4.3$, $V_o = 0$.

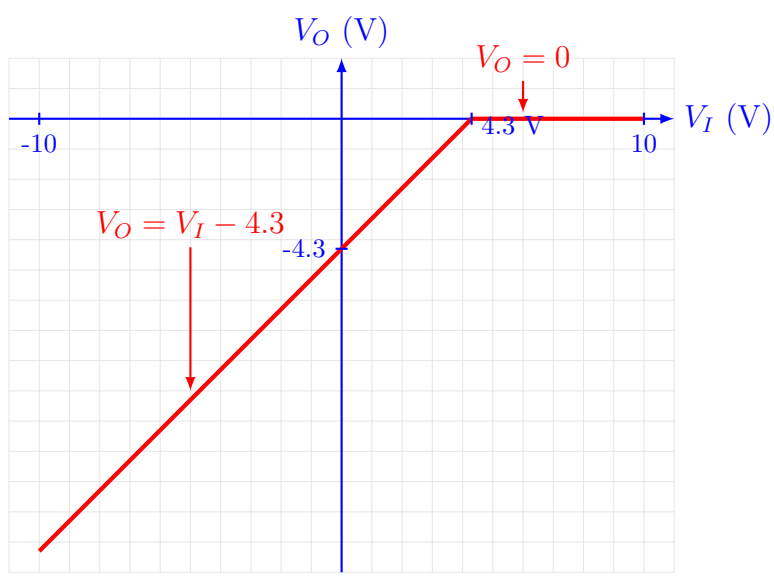

Figure 5: Transfer characteristic curve.

ii) $V_B = -5V$

First we must calculate V_I by doing the following:

$$V_I - V_\gamma + V_B = V_o \rightarrow V_I = V_o + V_\gamma - V_B = 0 + 5 + 0.7 = 5.7$$

BUT, V_I is only that while it is below the cut-in voltage, meaning that while $V_I > 5.7$, $V_o = 0$.

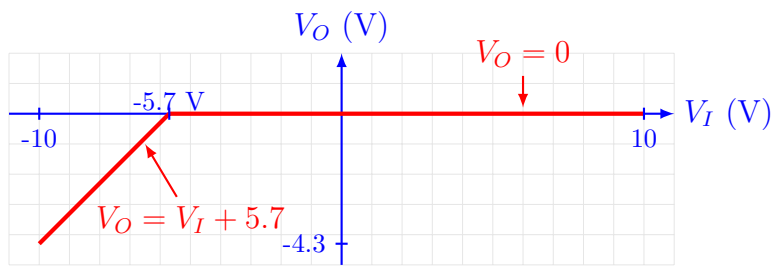

Figure 6: Transfer characteristic curve.

2.30

Assume each diode cut-in voltage is $V_\gamma = 0.7\ Volts$ for the circuit in Figure P2.30.

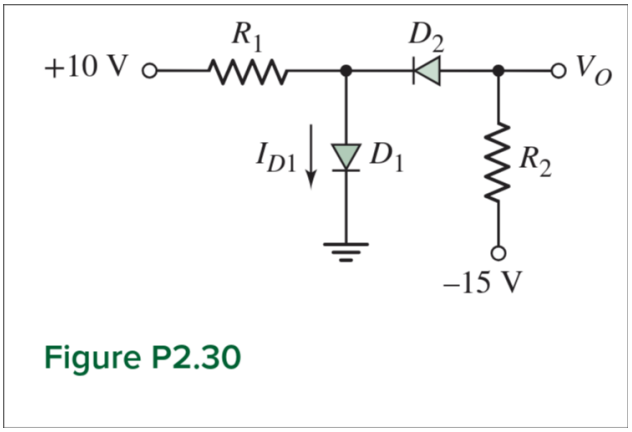

Figure 7: P2.30 from the textbook

A) Determine I_{D1} and V_O for $R_1 = 10k\Omega$, $R_2 = 5k\Omega$

We can derive the following equation from the circuit...

$$10 - I_1 * R_1 - V_{D1} = 0$$

Now, assuming that $I_1 = 0$, $V_{D1} = 10$, this means that $Diode_1$ is on and $Diode_2$ is off, therefore...

$$10 - I_1 * R_1 - 0.7 = 0 \rightarrow I_{D1} = I_1 \frac{9.3}{10,000} = 0.93mA$$

This then means that the V_o is going to simply be the same voltage as the load since diode 2 is off... Therefore...

$$V_o = -15\ V$$

B) Determine I_{D1} and V_O for $R_1 = 5k\Omega$, $R_2 = 10k\Omega$

Now, since the circuit is unchanged, we can assume that $I_1 = 0$, $V_{D1} = 10$, this, again, means that $Diode_1$ is on and $Diode_2$ is off, therefore...

$$10 - I_1 * R_1 - 0.7 = 0 \rightarrow I_{D1} = I_1 \frac{10 - 0.7}{5,000} = 1.86mA$$

This then means that the V_o is going to simply be the same voltage as the load since diode 2 is off... Therefore...

$$V_o = -15\ V$$

2.40

For the circuit shown in Figure P2.39, show that for $v_1 \geq 0$, the output voltage is approximately given by...

$$v_o = v_I - V_T * ln(\frac{v_o}{I_S * R})$$

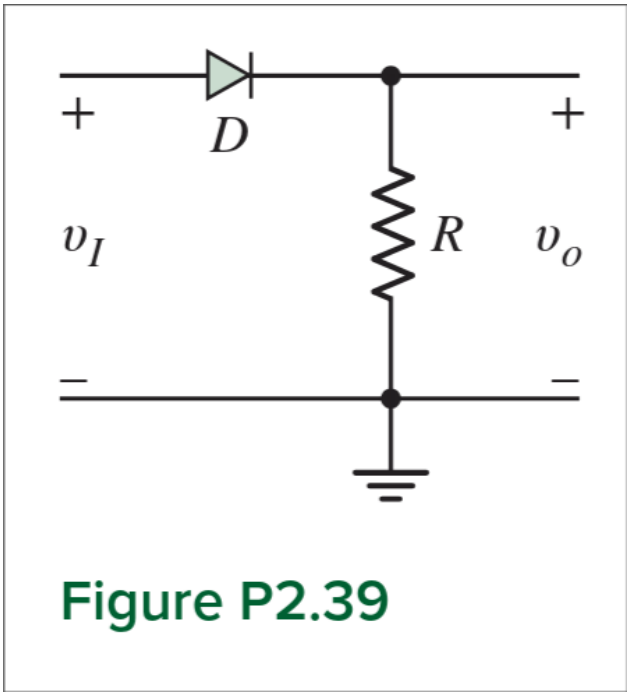

Figure 8: P2.39 from the textbook

Proof

Given the following 2 equations:

$$I_D = I_S * (e^{\frac{V_D}{n*V_T}} - 1)$$

$$V_I = V_D + V_o \rightarrow V_o = V_I - V_o$$

We can do the following...

$$V_O = I_D * R == I_S * (e^{\frac{V_D}{n*V_T}} - 1) * R \rightarrow \frac{V_o}{I_S * R} = e^{\frac{V_I - V_o}{n*V_T}} - 1 \rightarrow$$

$$\frac{V_I - V_o}{n * V_T} = ln(\frac{V_o}{I_S * R} + 1)$$

And, when we rearrange the equation to solve for V_o, we get...

$$V_o = V_I - n * V_T * ln(\frac{V_o}{I_S * R} + 1) \approx V_I - V_T * ln(\frac{V_o}{I_s * R})$$

2.52

The circuit in Figure P2.52 is a complementary output rectifier. If $v_s = 26 * sin[2 * \pi * (60\ Hz) * t]$ Volts, sketch the output waveforms v_o^+ and v_o^- versus time, assuming $V_\gamma = 0.6\ V$ for each diode.

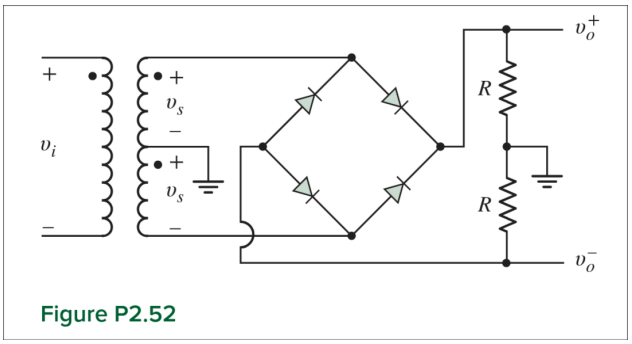

Figure 9: P2.52 from the textbook

The following is the waveform

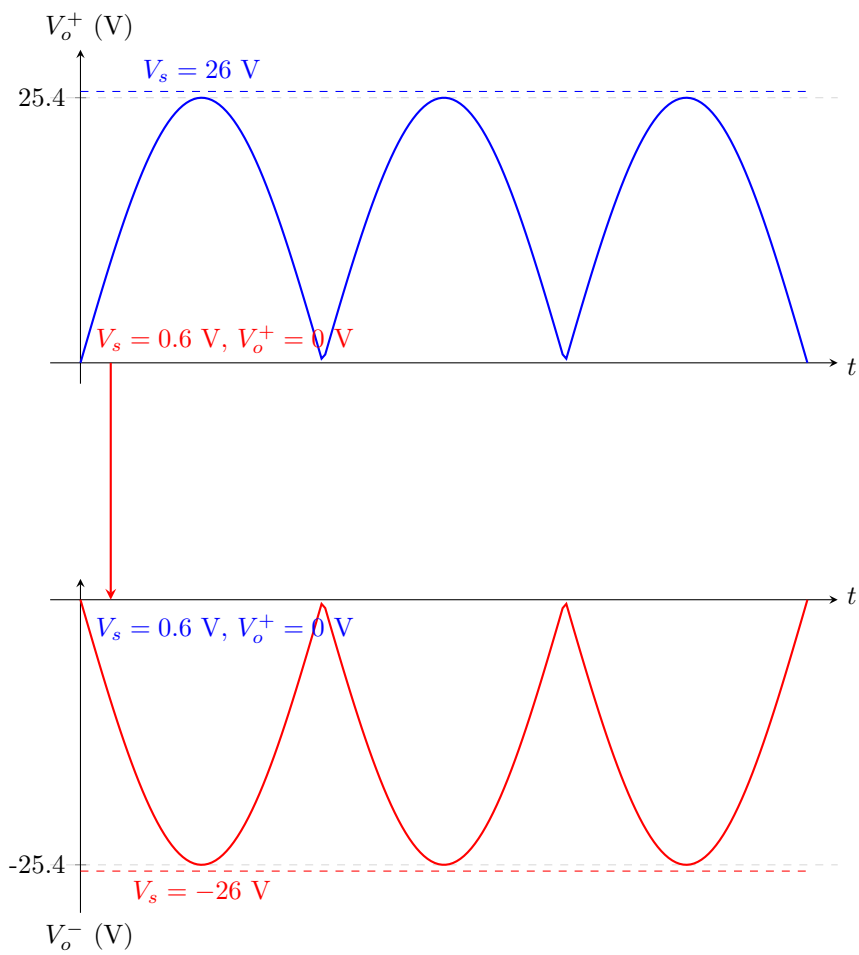

2.59

Consider the Zener diode circuit shown in Figure P2.59. Let $V_I = 60V$, $R_i = 150\Omega$, and $V_{ZO} = 15.4V$. Assume $r_z = 0$. The power rating of the diode is 4W and the minimum diode current is to be 15mA.

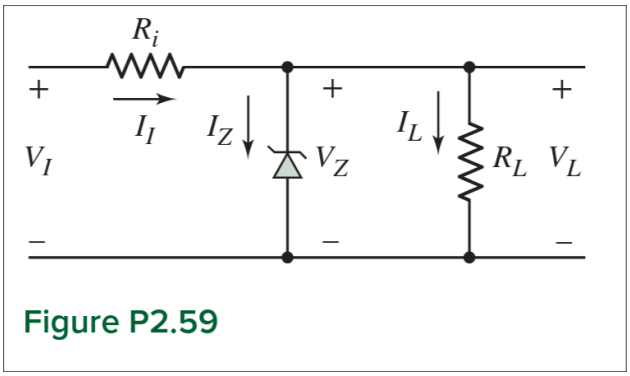

Figure 10: P2.59 from the textbook

A) Determine the range of diode currents.

$$I_{(2,\ max)} = \frac{P_{(2,max)}}{V_ZO} = \frac{4mW}{15.4V} = 259.74mA$$

Therefore the range is...

$$15mA \leq I_Z \leq 259.74mA$$

B) Determine the range of load resistance.

Now...

$$V_I - I_I * R_i - V_Z = 0 \rightarrow I_I = \frac{V_I - V_Z}{R_i} = \frac{60 - 15.4}{150} = 297.33mA$$

And then...

$$I_L = I_I - I_Z = either...$$

With the minimum current:

$$I_L = I_I - I_{(Z,\ max)} = 297.33 - 259.74 = 37.59mA$$

$$I_L = I_I - I_{(Z,\ min)} = 297.33 - 15 = 282.33mA$$

and therefore using Ohm's Law we get a load restance range of...

$$\frac{V_Z}{I_{(L,max)}} \leq R_L \leq \frac{V_Z}{I_{(L,min)}} \rightarrow 54.545\Omega \leq R_L \leq 409.650\Omega$$