Electronics 1: Homework #3

Yousef Alaa Awad

March 2, 2026

5.17

For all the transistors in Figure P5.17, $\beta = 75$. The results of some measurements are indicated on the figures. Find the values of the other labeled currents, voltages, and/or resistor values.

A)

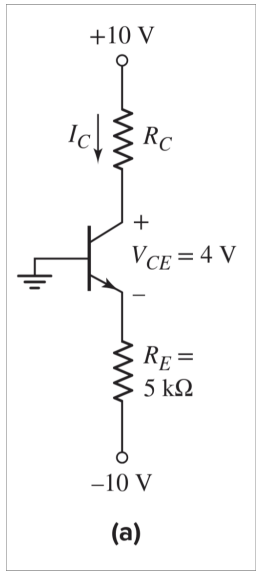

Figure 1: 5.17a from the textbook

First we always assume that $V_{BE} = 0.7V$. Therefore, given we can now find out that $V_C = V_{CE} + V_E = 4 - 0.7 = 3.3$ (aka getting rid of the E portion of CE). Now, given that I_C is the following:

$$I_C = \beta * I_B \rightarrow I_B = \frac{I_C}{\beta}$$

and when plugged into the given magic equation of I_E:

$$I_E = (\beta + 1) * I_B = \beta * I_B + I_B = I_C + \frac{I_C}{\beta}$$

Now, we can calculate that I_E via Ohm's Law...

$$I_E = \frac{-0.7 - (-10)}{5,000} = 1.86mA$$

And now, via our calculated I_E above, we can find I_C:

$$I_E = I_C + \frac{I_C}{\beta} \rightarrow 0.00186 = I_C \frac{I_C}{75} \rightarrow 0.1395 = 76 * I_C \rightarrow I_C = 1.8355mA$$

Now, we can then literally do Ohm's law to find the R_C:

$$I_C = \frac{10 - (4 - 0.7)}{R_C} \rightarrow \frac{0.0018355}{10 - (4 - 0.7)} = \frac{1}{R_C} \rightarrow R_C = 3650\Omega = 3.65k\Omega$$

B)

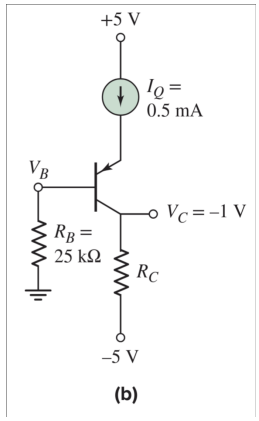

Figure 2: 5.17b from the textbook

Now, we know that..

$$V_{R_C} = V_C - V_{end} = -1 - (-5) = 4V$$

But, we need to find I_C so that we can use Ohm's Law. And to find I_C we need to find I_B and do the following, assuming that $I_Q = I_E$:

$$I_E = (\beta + 1) * I_B \rightarrow I_B = \frac{I_E}{\beta + 1} = \frac{0.5 * 10^{-3}}{75 + 1} = 6.5789 * 10^{-6} \rightarrow I_B = 6.5789\mu A$$

Now that we have I_B, we can calculate I_C via...

$$I_C = \beta * I_B = 75 * 6.5789 * 10^{-6} = 4.934175 * 10^{-4} = 0.4934175mA$$

And now, FINALLY, we can use Ohm's Law to find R_C:

$$R_C = \frac{4}{0.434175 * 10^{-4}} = 8106.7\Omega$$

But, we must calculate V_B via Ohm's Law as well...

$$V_B = I_B * R_B = 6.56789 * 10^{-6} * 25 * 10^3 = 0.1644V$$

C)

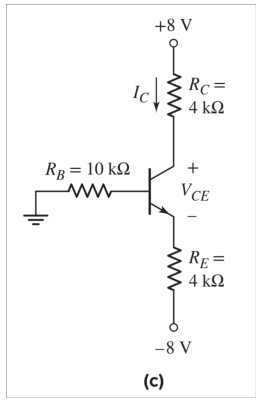

Figure 3: 5.17c from the textbook

Now, we always know that $V_{BE} = 0.7V$, and that we only know resistances and the output and input voltage, therefore we must do a KVL from base's ground to the emitter's -8V to find I_B:

$$R_B * I_B + V_B + R_E * I_E - 8 = 0 \rightarrow 10 * 10^3 * I_B + 0.7 + 4 * 10^3 * I_E - 8 = 0$$

And when you substitute $I_E = (\beta + 1) * I_B = 76 * I_B$ you get the following simplification:

$$10 * 10^3 * I_B + 0.7 + 4 * 10^3 * I_E - 8 = 0 \rightarrow 10 * 10^3 * I_B + 4 * 10^3 * 76 * I_B = 7.3 \rightarrow$$

$$I_B = 23.23\mu A$$

Now, after calculating I_B, we can calculate I_C via some magic equation given in class:

$$I_C = \beta * I_B = 75 * 23.23 * 10^{-6} = 1.744mA$$

Now, we have to find V_{CE}, and to find that we need to first get V_C via Ohm's Law:

$$V_C + 8 = I_C * R_C = 1.744 * 10^{-3} * 4 * 10^3 \rightarrow V_C = 1.024V$$

Now we need V_E, but to get that we need I_E and so we do the following:

$$I_E = (\beta + 1) * I_B = 76 * 23.23 * 10^{-6} = 1.7632 * 10^{-3} = 1.7632mA$$

Now, via Ohm's Law we calculate that:

$$V_E = I_E * R_E = 1.7632 * 10^{-3} * 4 * 10^3 \rightarrow 7.0528 - 8 = -0.9472V$$

And now we can find V_{CE}

$$V_{CE} = V_C - V_E = 1.024 - (-0.9472) = 1.9712V$$

D)

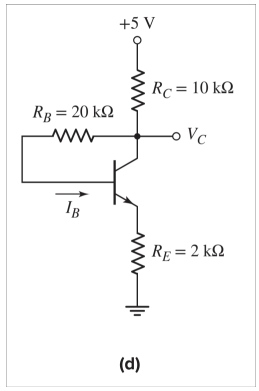

Figure 4: 5.17d from the textbook

Now, we always assumed that $V_{BE} = 0.7V$ and therefore we do a KVL to find I_B:

$$5-10*10^3*I_C-20*10^3*I_B-0.7-2*10^3*I_E = 0 \rightarrow 5-10*10^3*I_B-20*10^3*I_B-0.7-2*10^3*(\beta+1)*I_B = 0$$

$$\rightarrow I_B = 4.664\mu A$$

Now, we also then can calculate I_C:

$$I_C = \beta * I_B = 75 * 4.664 * 10^{-6} = 0.350mA$$

And now we can use Ohm's Law to find V_C:

$$5 - V_C = I_C * R_C \rightarrow 5 - V_C = 0.350 * 10^{-3} * 10 * 10^3 \rightarrow V_C = 1.502V$$

5.23

In the circuits shown in Figure P5.23, the values of measured parameters are shown. Determine β, α, and the other labeled currents and voltages. Sketch the dc load line and plot the Q-point.

A)

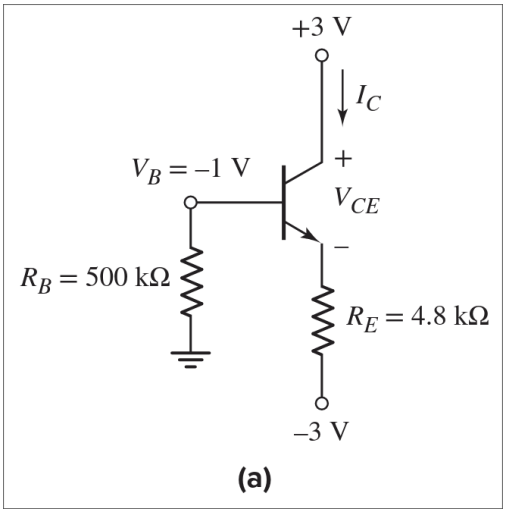

Figure 5: 5.23a from the textbook

First we must try and find the β value. And to do that, we must find 2 respective currents that can therefore be transferred to each other.

$$I_B = \frac{0-(-1)}{500*10^3} = 2*10^{-6} = 2\mu A$$

$$I_E = \frac{-1.7-(-3)}{4.8*10^3} = 0.271*10^{-3} = 0.271mA$$

And now, given $I_E = (\beta+1)*I_B$, we can find β:

$$I_E = (\beta+1)*I_B \rightarrow 0.271*10^{-3} = (\beta+1)*2*10^{-6} \rightarrow \beta = 134.317$$

And now that we have β, we can calculate α:

$$\alpha = \frac{\beta}{\beta+1} = \frac{134.317}{134.317+1} \rightarrow \alpha = 0.993$$

Now, the only this left is to find I_C and V_{CE}. First I shall find I_C:

$$I_C = \beta * I_B = 134.317*2*10^{-6} = 0.269mA$$

And now, V_CE. For this, the figure shows that $V_C = 3V$, therefore V_{CE} is the following:

$$V_{CE} = 3 - V_E = 3-(-1-0.7) = 3+1.7 = 4.7V$$

Graph

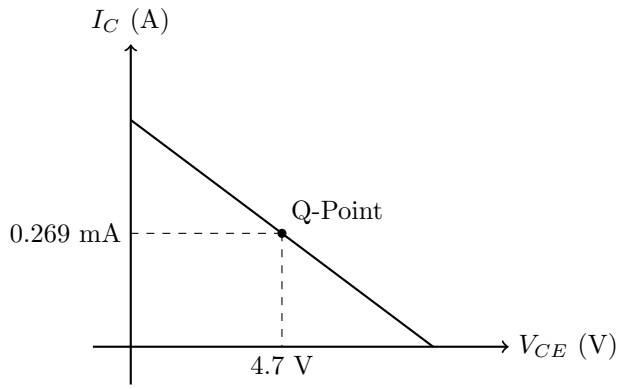

B)

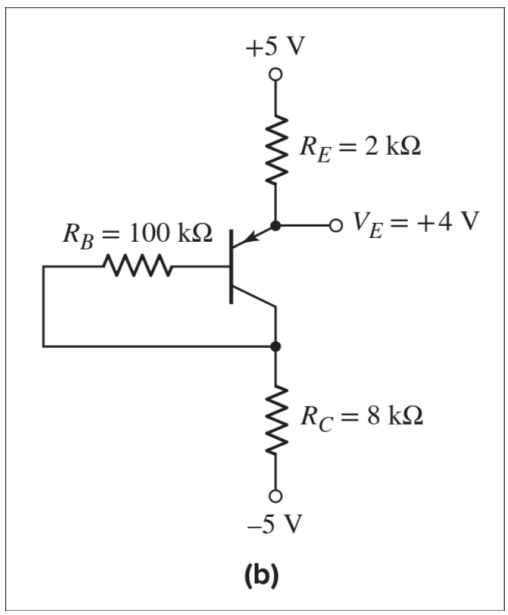

Figure 6: 5.23b from the textbook

First we can find I_E:

$$I_E = \frac{5-4}{2*10^3} = 0.5*10^3 = 0.5mA$$

After this, we can find V_B since $V_{BE} = 0.7V$:

$$V_{BE} = V_B - V_E \rightarrow -0.7 = V_B - 4 \rightarrow V_B = 3.3V$$

After this, we do a KCL to find I_C, and therefore the rest of the stuff we need.

$$I_E = I_C + I_B$$

And since the emitter is facing the transistor (it's a PNP), it means that all current is heading towards the collector. Therefore...

$$I_C = I_E + I_B$$

Therefore...

$$I_{R_C} = I_E$$

Therefore, we can find V_{R_C} via Ohm's Law:

$$V_{R_C} = -5 + 0.5 * 10^{-3} * 8 * 10^3 \rightarrow V_{R_C} = -1V$$

NOW, WE CAN FIND THE CURRENT IN THE BASE!!!!!! I LOVE BASE, AND HATE TREBLE BTW:

$$V_{R_B} = V_B - V_{R_C} = 3.3 - (-1) = 4.3V$$

NOW, OHM'S LAW:

$$I_B = \frac{4.3}{100 * 10^3} = 0.43 * 10^{-6} = 0.43\mu A$$

NOW, BETA:

$$I_E = (\beta + 1) * I_B \rightarrow 0.5 * 10^{-3} = (\beta + 1) * 0.43 * 10^{-6}$$

$$\beta = 10.6279$$

And α is...

$$\alpha = \frac{\beta}{\beta + 1} = 0.914$$

Graph

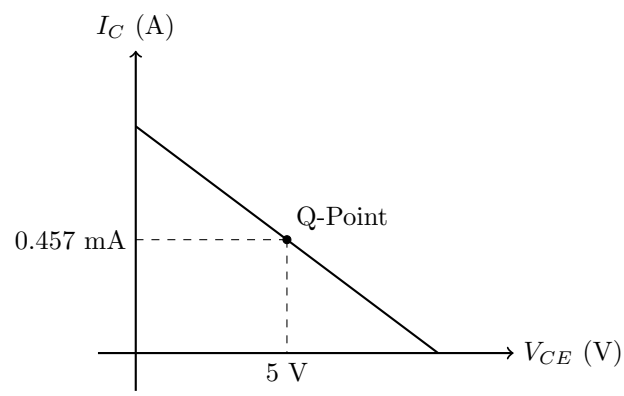

5.29

For the circuit shown in Figure P5.29, if $\beta = 200$ for each transistor, determine: (a) I_{E1}, (b) I_{E2}, (c) V_{C1}, and (d) V_{C2}.

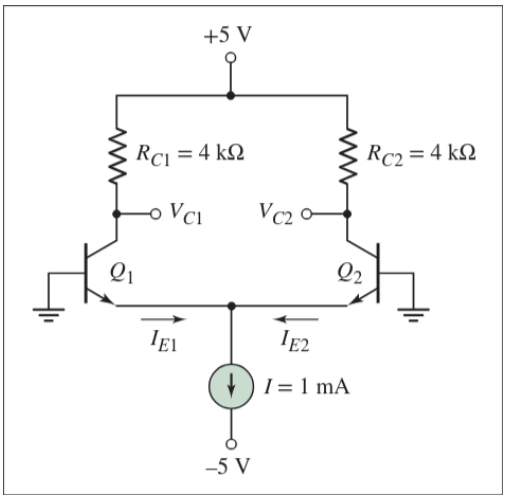

Figure 7: 5.29 from the textbook

A)

To calculate I_{E1}, we must first realize that I_{E1} and I_{E2} are equal due to how the circuit is symmetrical. Due to this, we can know the following:

$$I_{E1} + I_{E2} = 1mA \rightarrow I_{E1} = I_{E2} = 0.5mA$$

B)

Since we established I_{E1} and I_{E2} are equal, then we have already calculated I_{E2}...

$$I_{E2} = I_{E1} = 0.5mA$$

C)

To calculate V_{C1}, we first must find I_{C1}. And to do that, we have to realize that I_C1 will be the same as I_E1 since the V_B is 0V. Since that is true, we then can use Ohm's Law to find that V_{C1} is...

$$5 - V_{C1} = 0.5 * 10^{-3} * 4 * 10^3 \rightarrow V_{C1} = 3V$$

D)

Since we established that both sides are symmetrical, then we have already calculated V_{C2}...

$$V_{C2} = V_{C1} = 3V$$

5.49

For the transistor in the circuit shown in Figure P5.49, assume $\beta = 120$. Design the circuit such that $I_{CQ} = 0.15mA$ and $R_{TH} = 200k\Omega$. What is the value of V_{CEQ}?

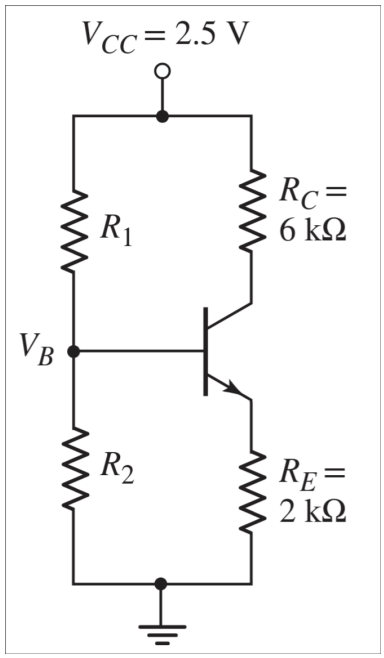

Figure 8: 5.49 from the textbook

First, we are given I_{CQ}, therefore we can find V_C:

$$V_{R_C} = I_{CQ} * R_C = 0.15 * 10^{-3} * 6 * 10^3 = 0.9V$$

Therefore, V_C will be...

$$V_C = 2.5 - 0.9 = 1.6V$$

Now we can calculate V_B via the given magic equations from the ether:

$$I_B = \frac{I_C}{\beta} = \frac{0.15 * 10^{-3}}{120} = 1.25 * 10^{-6} = 1.25\mu A$$

After this we sadly cannot find V_B yet, BUT we can find I_E.

$$I_E = (\beta + 1) * I_B = 0.15125 * 10^{-3} = 0.15125mA$$

Now, we can find V_E, of which we know is via Ohm's Law!

$$V_E = I_E * R_E = 0.15125 * 10^{-3} * 2 * 10^3 = 0.3025V$$

And!!! After this, we know that V_BE is ALWAYS 0.7V, therefore we simply have to add 0.7V to whatever our V_E is to find V_B:

$$V_B = V_E + 0.7 = 1.0025V$$

And, with this we know V_{CEQ}:

$$V_{CEQ} = V_C - V_E = 1.6 - 0.3025 = 1.2975V$$

Now, we need to find R_1, and R_2. And to do that, we will assume that V_B is where the the load of the thevenin circuit is. Therefore, because the load gives out a "voltage" of 1.0025V, and a current of $1.25\mu A$, we can calculate via Ohm's Law, that V_{TH} to be:

$$V_{TH} = 200 * 10^3 * 1.25 * 10^{-6} + 1.0025 = 1.2525V$$

After this, given from the magic lab....

$$V_{TH} = \frac{V_{CC} * R_2}{R_1 + R_2} \rightarrow 1.2525 = \frac{2.5 * R_2}{R_1 + R_2} \rightarrow 1.004008 * R_1 = R_2$$

And now, we just assume its bloody parallel (thank you lab):

$$R_{TH} = \frac{R_1 * R_2}{R_1 + R_2} \rightarrow 200 * 10^3 = \frac{1.004008 * R1^2}{2.004008 * R_1} \rightarrow$$

$$R_1 = 399,201.6\Omega$$

$$R_2 = 400,801.6\Omega$$