University of Central Florida
EEL3926L: Junior Design

Laboratory 4: KiCad PCB Design

Yousef Awad

February 23, 2026

Abstract

This report documents the design of the regulator daughter board PCB. The objective was to translate the regulator prototype into a professional printed circuit board layout, generating the necessary manufacturing files including the schematic, board layout, and bill of materials (BOM).

Contents

1 Introduction **2**

2 Methodology **2**

3 Design Deliverables **2**

3.1 Schematic Diagram 2

3.2 Board Layout 3

3.3 Bill of Materials (BOM) 3

3.4 Fabrication Preview 4

4 Results and Verification **4**

5 Conclusion **4**

1 Introduction

The purpose of this laboratory assignment was to become proficient with the PCB design workflow within KiCad. The specific task involved designing a PCB for a regulator circuit, which includes a TPS613222 boost converter, inductor, capacitors, and status LEDs.

2 Methodology

The design process followed these standard steps:

1. **Schematic Capture:** Components were placed and connected in the KiCad. Custom symbols were verified/created to match the footprints.
2. **PCB Layout:** Components were arranged to minimize noise and loop area, specifically focusing on the critical loop of the boost converter.
3. **Routing:** Traces were routed with appropriate widths for power (3.3V/5V) and signal lines.
4. **Verification:** Design Rule Checks (DRC) and Electrical Rule Checks (ERC) were performed to ensure manufacturability and electrical connectivity.

3 Design Deliverables

3.1 Schematic Diagram

Figure 1 presents the schematic for the regulator daughter board. The circuit utilizes the TPS613222ADBVR regulator, input/output capacitors, and inductor L1.

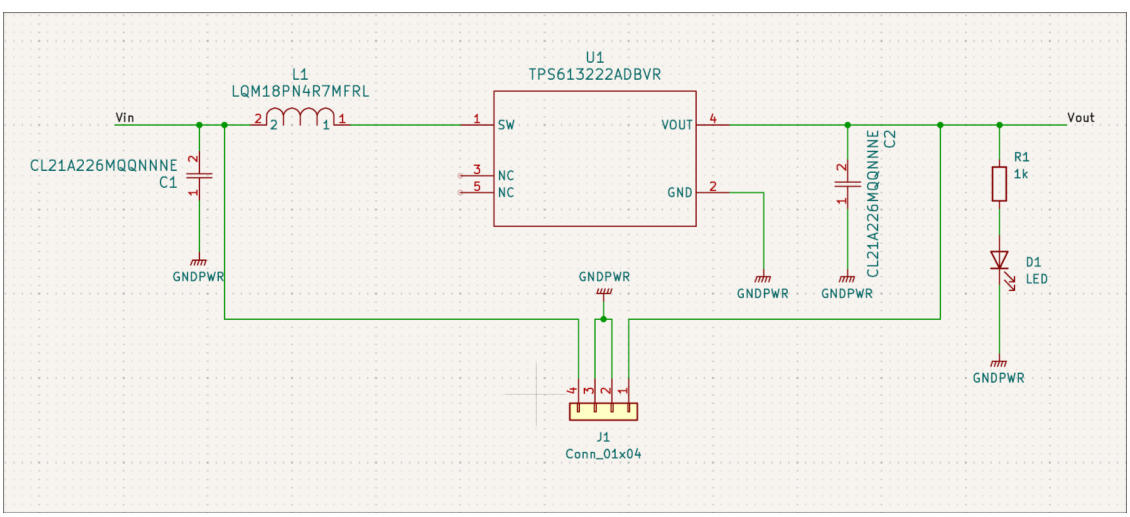

Figure 1: Regulator Daughter Board Schematic (KiCad)

3.2 Board Layout

The final PCB layout is presented in Figure 2. The layout prioritizes the placement of C1, C2, and L1 close to the regulator U1 to minimize parasitic inductance.

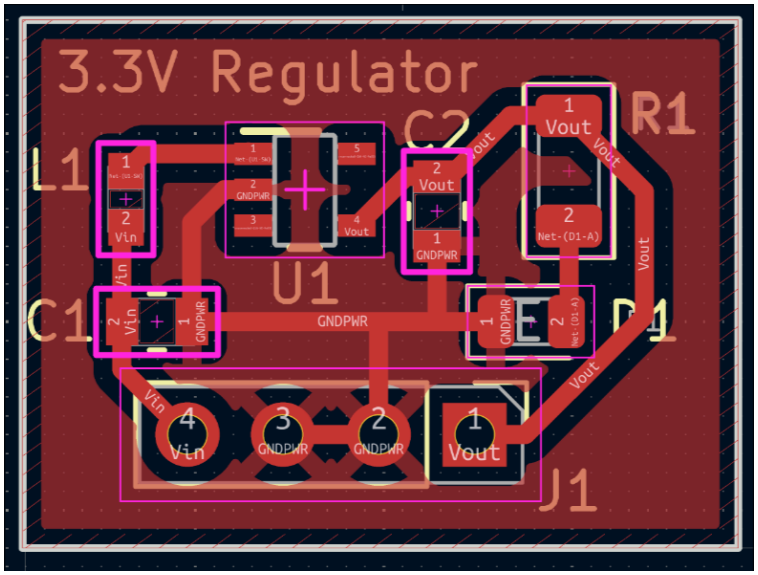

Figure 2: Regulator Daughter Board PCB Layout (KiCad)

3.3 Bill of Materials (BOM)

The components used in this design are listed in Table 1.

Table 1: Bill of Materials

Id	Designator	Footprint	Qty	Designation
1	J1	PinHeader_1x04_Vertical	1	Conn_01x04
2	C1, C2	CAP_CL21_SAM	2	CL21A226MQQNNNE
3	D1	LED_0805	1	LED
4	L1	IND_LQM18P	1	LQM18PN4R7MFRL
5	U1	DBV0005A_N	1	TPS613222ADBVR
6	R1	R_1206	1	1kΩ

3.4 Fabrication Preview

To verify the final board design prior to manufacturing, the generated Gerber files were evaluated using a manufacturer's 3D viewer. Figure 3 displays the rendered preview of the PCB via JLCPCB, confirming that the component footprints, drill holes, and board outline are correctly defined and ready for fabrication.

Figure 3: 3D Board Preview via JLCPCB

4 Results and Verification

The design passed all Electronic Rule Checks (ERC) and Design Rule Checks (DRC) within KiCad.

5 Conclusion

In this week's assignment, I successfully designed a custom PCB for the regulator circuit using KiCad. I learned how to manage component libraries, route traces effectively for power converters, and generate the necessary fabrication data (Gerbers). This PCB will serve as the power regulation module for the Junior Design project.

References

[1] Google. (2026). *Gemini* [Large language model]. LaTeX template generation. `https://gemini.google.com`