EEL3926L Week 6 Laboratory: Datasheet and Research

Yousef Alaa Awad
University of Central Florida

March 4, 2026

1 Introduction

The objective of this laboratory was to research component specifications using datasheets and Ultra Librarian to define the necessary signal connections for the Junior Design Range Finder project. Additionally, the pinout for the MSP430G2553 microprocessor was analyzed to assign specific pins for I2C communication, ADC inputs, and GPIO control. A draft schematic was designed, and the software header library was modified to reflect these pin assignments.

2 MSP430G2553 Pin Configuration (Procedure 3.1)

Table 1 below details the specific pin assignments chosen for the MSP430G2553 chip based on the functional requirements of the project.

Table 1: MSP430G2553 Pin Assignments

Function	**Pin Name**	**Pin Number**	**Connect To**	**Description**
Voltage Input	DVCC	1	3.3V Regulator Output	Digital supply voltage
Ground	DVSS	20	Ground	Ground reference
SCL Line	P1.6	14	SCL Display	USCI_B0 I2C mode: SCL I2C clock
SDA Line	P1.7	15	SDA Display	USCI_B0 I2C mode: SDA I2C data
Echo Line	P2.0	8	Echo Sensor	General-purpose digital I/O pin
Trigger Line	P2.1	9	Trigger Sensor	General-purpose digital I/O pin
ADC Input Line	P1.0	2	Potentiometer	ADC10 analog input A0
ADC Output Line	P1.1	3	PWM LED Input	General-purpose digital I/O pin
MOSFET Line	P1.2	4	MOSFET/LED Input	General-purpose digital I/O pin
Programmer Test	SBWTCK	17	Programming Pins	Selects test mode for JTAG pins on Port 1. The device protection fuse is connected to TEST.
Programmer Reset	SBWTDIO	16	Programming Pins	Reset

3 Component Signal Definitions (Procedure 3.2)

Below are the defined signal connections for the components used in the Bill of Materials (BOM), based on their respective datasheets.

A. Battery Pack

- **Terminal 1:**
- **Terminal 2:**

B. Switch

- **Pin 1:**
- **Pin 2:**
- **Pin 3:**

C. 3.3V Regulator PCB (Female Header)

- **Pin 1:**
- **Pin 2:**
- **Pin 3:**
- **Pin 4:**

D. 5V Regulator PCB (Female Header)

- **Pin 1:**
- **Pin 2:**
- **Pin 3:**
- **Pin 4:**

E. LCD Display (Male Header)

- **Pin 1:**
- **Pin 2:**
- **Pin 3:**
- **Pin 4:**

F. Ultrasonic Sensor (Female Header)

- **Pin 1:**
- **Pin 2:**
- **Pin 3:**
- **Pin 4:**

G. Potentiometer

- **Pin 1:**
- **Pin 2:**
- **Pin 3:**

H. BS170 MOSFET

- **Pin 1:**
- **Pin 2:**
- **Pin 3:**

4 Schematic and Header Library

4.1 Final Schematic Sketch (Procedure 3.3)

Figure 1 shows the hand-drawn schematic sketch illustrating the connections defined in Section 2 and 3.

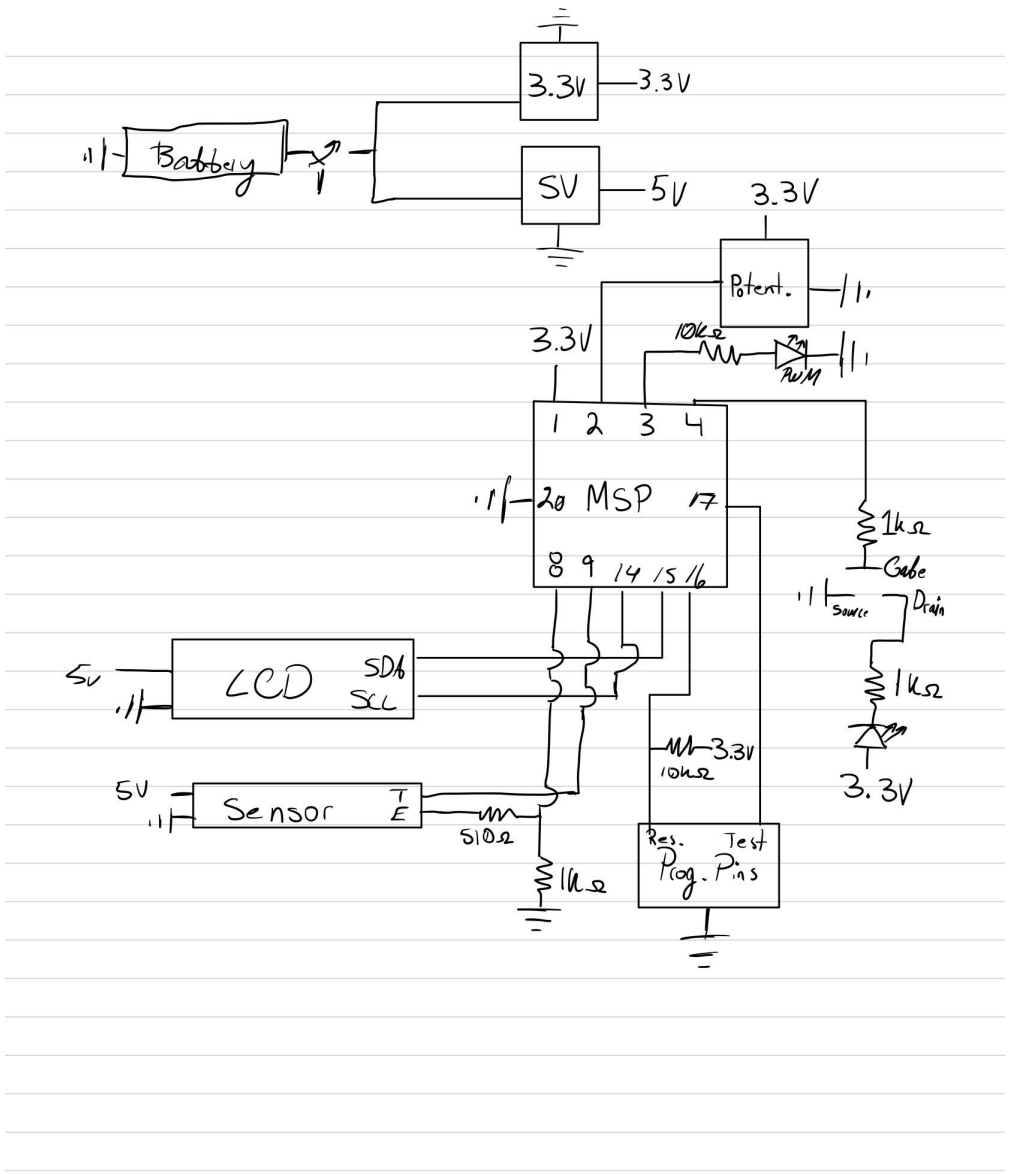

Figure 1: Hand Drawn Schematic for Range Finder Project

4.2 Modified Header Library (Procedure 3.4)

Figure 2 shows the modifications made to the template header library (lines 88-96) to match the pin definitions.

[Insert Header Screenshot Here]

Figure 2: Screenshot of Modified Header Library Code

5 Summary

In this laboratory, I learned the importance of thoroughly researching component datasheets before beginning the design phase. By defining the pinouts for the MSP430G2553 and the peripheral components, I gained a better understanding of how the subsystems (Power, I2C, ADC, GPIO) interact within the Range Finder project. This preparation ensures that the subsequent PCB design and software implementation will be based on verified signal connections.