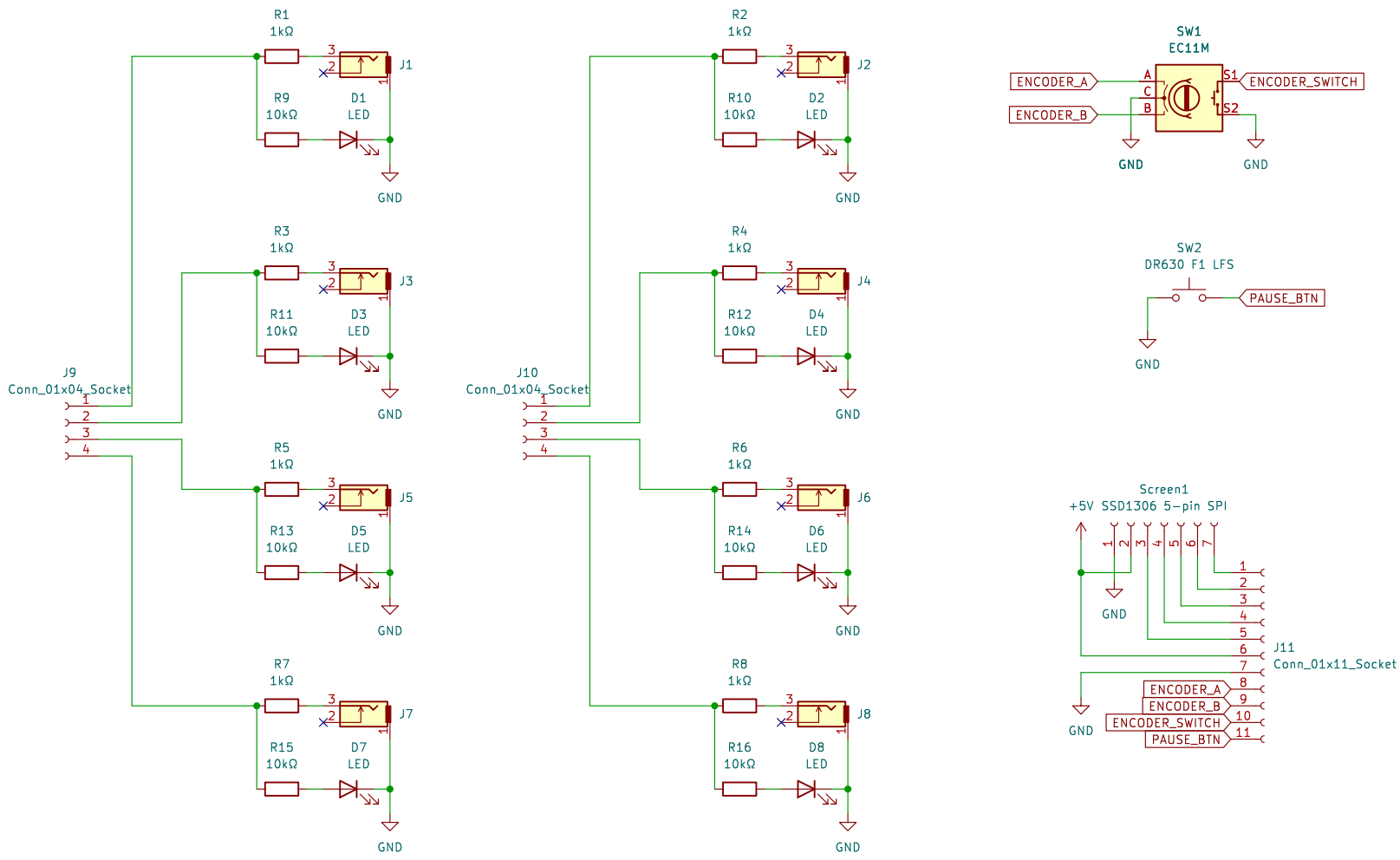

FreeModular

Sheet: /

File: clock_front_pcb.kicad_sch

Title: Clock Front

Size: A4	Date: 2023-10-26	**Rev: v2.0**
KiCad E.D.A. 8.0.5-dirty		Id: 1/1