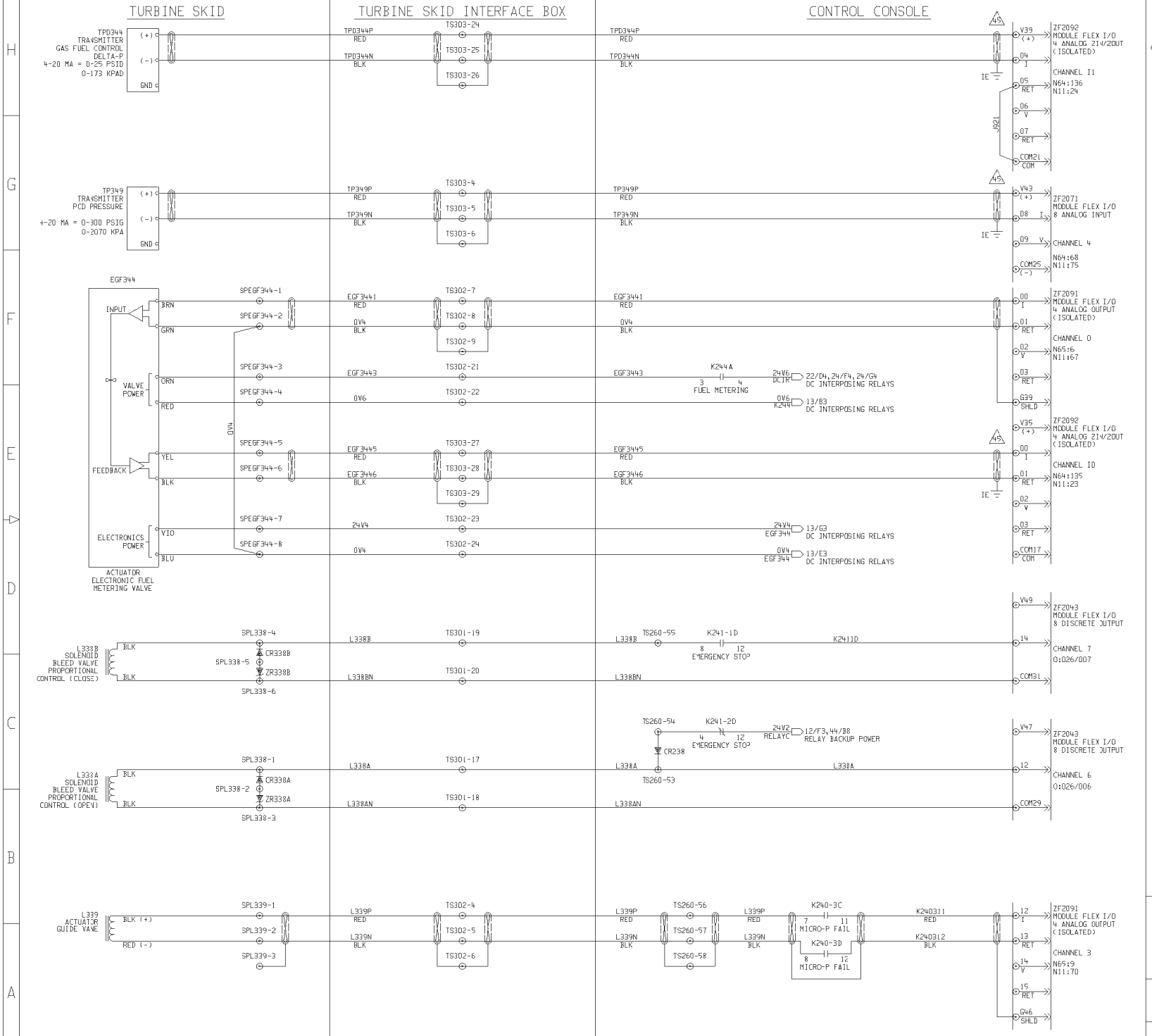

NOTES

45 CONNECT FLEX ANALOG INPUT SHIELDS TO SHIELD BUS BAR. ADD 14 AWG GRN/YEL WIRE TO CONNECT SHIELD BUS BAR TO IE200.

TURBINE FUEL VALVE BLEED VALVE AND GUIDE VANE CONTROL

Solar Turbines
A Caterpillar Company

DRAWING NO. 57011-149+80 | REV B0 | SHEET 25 OF 63

"THIS IS A PROPRIETARY DESIGN OF SOLAR TURBINES INCORPORATED. REPRODUCTION, MANUFACTURE OF USE OF ANY COMPONENT, SUBASSEMBLY OR PART THEREOF WITHOUT WRITTEN CONSENT OF SOLAR TURBINES INC. IS PROHIBITED. ANY COPY OF THIS DRAWING OR PART IS PERMISSIBLE ONLY IF EXPRESSLY AUTHORIZED IN WRITING BY SOLAR TURBINES INCORPORATED."

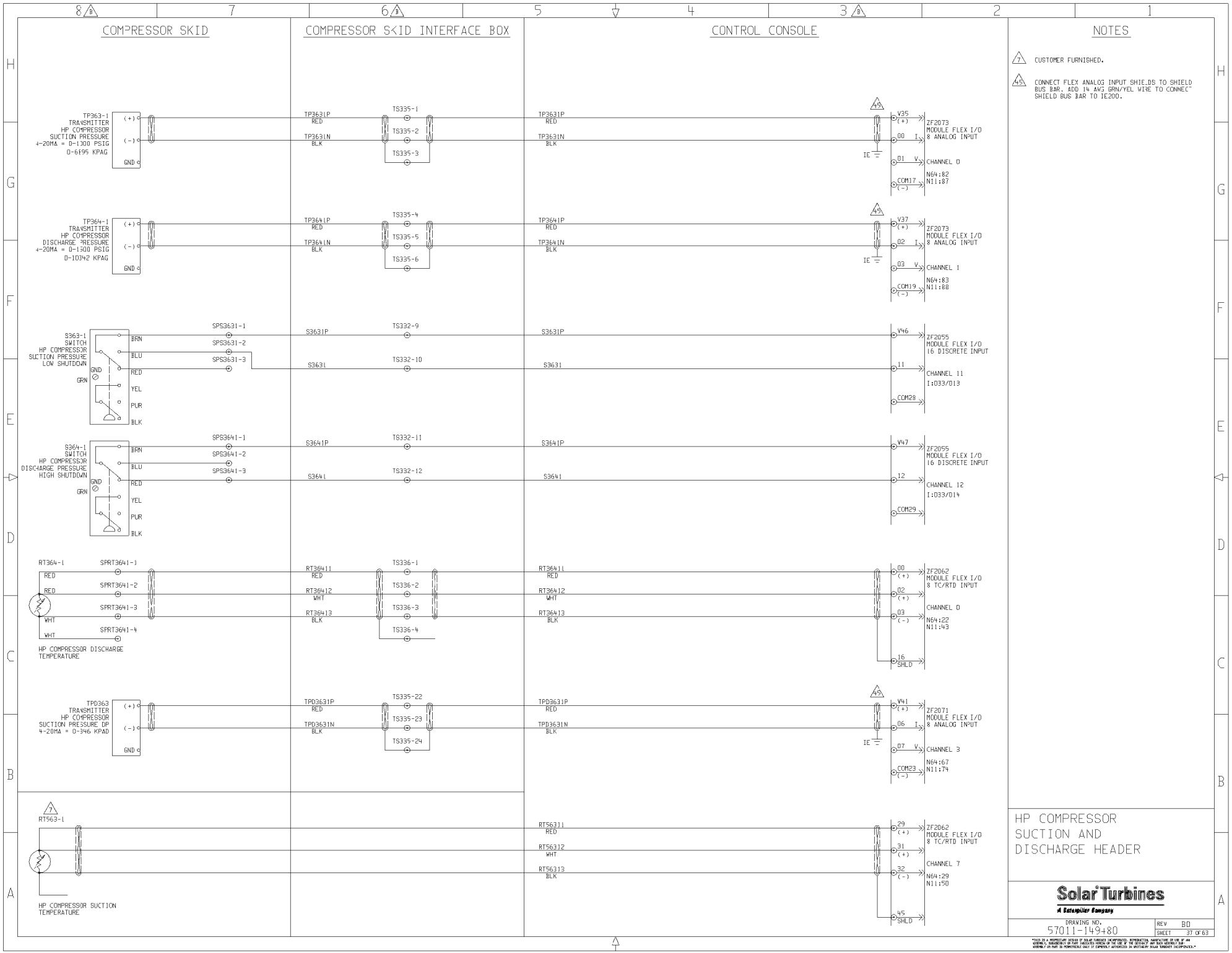
COMPRESSOR SKID
COMPRESSOR SKID INTERFACE BOX
CONTROL CONSOLE
TP363-1
TRANSMITTER
HP COMPRESSOR
SUCTION PRESSURE
4-20MA = 0-1300 PSIG
0-6895 KPAG
TP3631P
RED
TP3631N
BLK
TS335-1
TS335-2
TS335-3
V35
ZF2073
MODULE FLEX I/O
8 ANALOG INPUT
CHANNEL 0
N64:82
N11:87
COM17
TP364-1
TRANSMITTER
HP COMPRESSOR
DISCHARGE PRESSURE
4-20MA = 0-1500 PSIG
0-10342 KPAG
TP3641P
TP3641N
TS335-4
TS335-5
TS335-6
V37
CHANNEL 1
N64:83
N11:88
COM19
S363-1
SWITCH
HP COMPRESSOR
SUCTION PRESSURE
LOW SHUTDOWN
SPS3631-1
SPS3631-2
SPS3631-3
S3631P
S3631
TS332-9
TS332-10
V46
ZF2055
MODULE FLEX I/O
16 DISCRETE INPUT
CHANNEL 11
I:033/013
COM28
S364-1
SWITCH
HP COMPRESSOR
DISCHARGE PRESSURE
HIGH SHUTDOWN
SPS3641-1
SPS3641-2
SPS3641-3
S3641P
S3641
TS332-11
TS332-12
V47
CHANNEL 12
I:033/014
COM29
RT364-1
SPRT3641-1
SPRT3641-2
SPRT3641-3
SPRT3641-4
HP COMPRESSOR DISCHARGE
TEMPERATURE
RT36411
RT36412
RT36413
TS336-1
TS336-2
TS336-3
TS336-4
V41
ZF2062
MODULE FLEX I/O
8 TC/RTD INPUT
CHANNEL 0
N64:22
N11:43
SHLD
TPD363
TRANSMITTER
HP COMPRESSOR
SUCTION PRESSURE DP
4-20MA = 0-346 KPAD
TPD3631P
TPD3631N
TS335-22
TS335-23
TS335-24
V41
ZF2071
MODULE FLEX I/O
8 ANALOG INPUT
CHANNEL 3
N64:67
N11:74
RT563-1
HP COMPRESSOR SUCTION
TEMPERATURE
RT56311
RT56312
RT56313
V29
ZF2062
MODULE FLEX I/O
8 TC/RTD INPUT
CHANNEL 7
N64:29
N11:50
NOTES
7 CUSTOMER FURNISHED.
45 CONNECT FLEX ANALOG INPUT SHIELDS TO SHIELD BUS BAR. ADD 14 AWG GRN/YEL WIRE TO CONNECT SHIELD BUS BAR TO IE200.
HP COMPRESSOR
SUCTION AND
DISCHARGE HEADER
Solar Turbines
A Caterpillar Company
DRAWING NO.
57011-149+80
REV B0
SHEET 37 OF 63