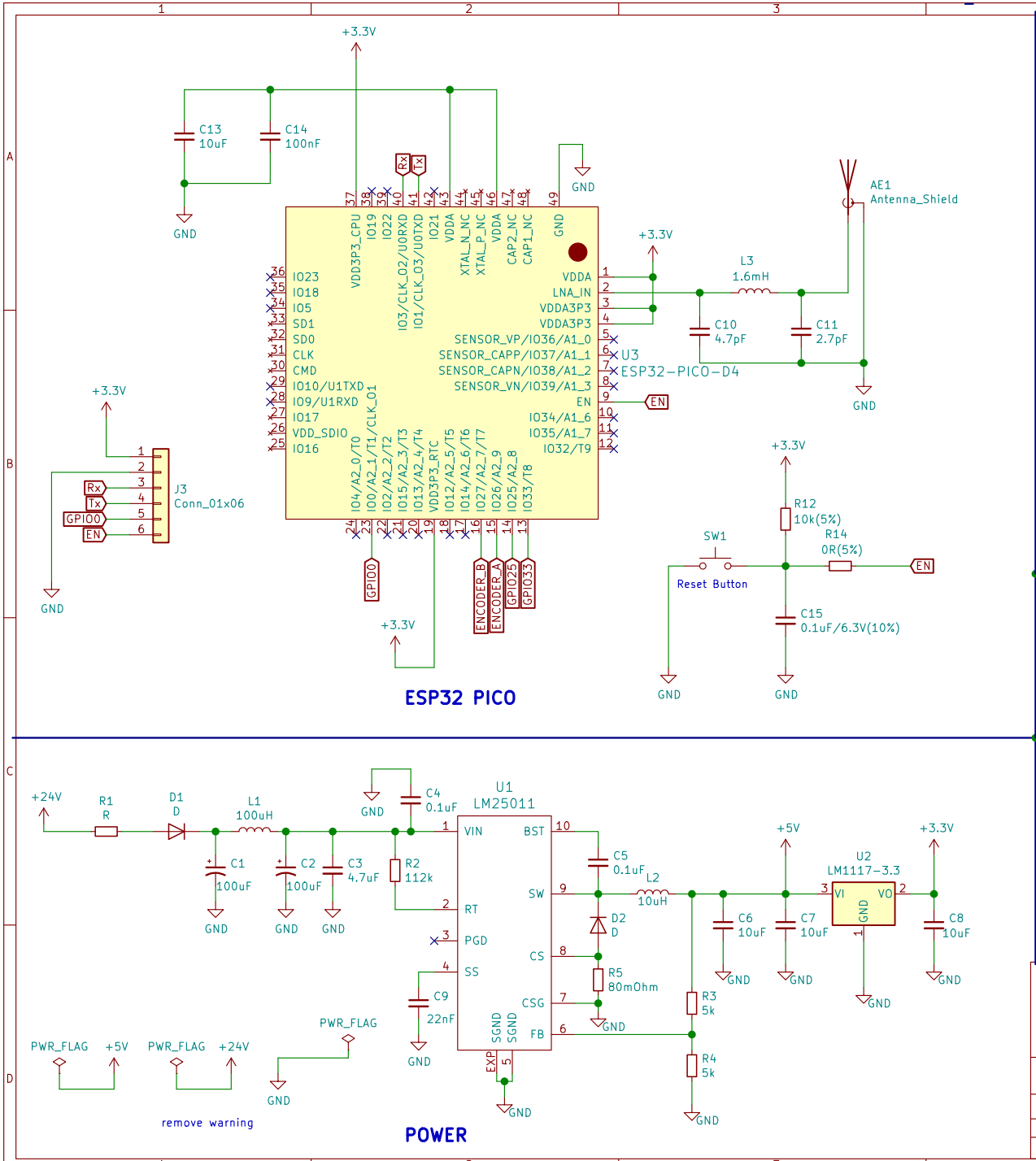

Sheet: /
File: smartCurtains_sch.sch

Title:

Size: A4	Date:	Rev:
KiCad E.D.A. kicad 6.0.0-rc1-unknown-78ab5c384ubuntu16.04.1		Id: 1/1