technische universität
dortmund

Measurement of scintillating fibres for the LHCb experiment

Lab Course E5a

March 2026

Advanced Physics Lab Course
TU Dortmund University / Physics faculty

Contents

1 Introduction **3**

1.1 The LHCb Experiment at the LHC 3

1.2 Scintillating Fibre Tracker 4

1.3 Scintillating Fibres 5

1.4 Silicon Photomultiplier Readout 11

2 Simulation **13**

3 Experimental Setup **13**

3.1 Commissioning of the setup 14

4 Tasks **15**

4.1 Spectrometer Measurement 15

4.2 Radial Symmetry 15

4.3 Simulation 15

4.4 Intensity Measurement 16

1 Introduction

The aim of this lab course is to gain a better understanding of the working principle of scintillating fibres, which are used as active materials in modern particle detectors such as the LHCb experiment. To achieve this, participants of the course will measure the angular distribution of light at the end of a fibre and characterise its absorption behaviour. Both will be compared with simulated data.

1.1 The LHCb Experiment at the LHC

The Large Hadron Collider (LHC) is a circular particle accelerator, located at the European Organization of Nuclear Research (CERN) near Geneva. Here, protons can be accelerated and brought to collision with centre-of-mass energies up to $\sqrt{s} = 13.6\,\text{TeV}$ at the four experiments ALICE, ATLAS, CMS, and LHCb.

The LHCb detector, shown in Figure 1 is a single-arm forward spectrometer originally designed to study decays of b- and c-hadrons. This geometry was chosen since at the energies of the LHC $\bar{b}$ and $\bar{c}$ quark pairs are predominantly produced under a small angle with respect to the beam axis and with a large boost. The resulting hadrons, e.g. B mesons, therefore fly for about a centimetre from their production vertex before decaying. Resolving the primary and the secondary decay vertex is the main task of the first subdetector, a silicon pixel detector called Vertex Locator (VELO). The VELO, together with the Upstream Tracker (UT), the Scintillating Fibre (SciFi) Tracker, and the dipole magnet, makes up the spectrometer system of LHCb, responsible for precisely measuring momenta of charged particles. The UT is a silicon strip detector placed in front of the magnet. It improves the momentum resolution of a track and aids in track reconstruction. The main tracking chamber is the SciFi Tracker, located behind the magnet, here scintillating fibres are used to measure the trajectories of charged particles. The SciFi Tracker is described in more detail in the following chapter.

Particle identification is provided by two Ring Imaging Cherenkov (RICH1, RICH2) detectors, a calorimeter system (ECAL, HCAL) and the muon chambers (M2 - M5). The RICH detectors measure the angle of Cherenkov radiation, which is emitted when a charged particle passes through a medium with a refractive index greater than one. From the measured angle, the velocity of a charged particle can be calculated and together with its momentum the mass of the particle can be determined. The calorimeter system allows for identifying electrons, photons, and hadrons. Electrons for example can be identified by matching tracks to clusters in ECAL, whereas photons are characterised by clusters without an associated track. The four muon stations detect particles that are not stopped by the other detectors and therefore have a high probability of being muons, which at the energies of the LHC are able to traverse the entire detector as they do not feel the strong interaction and do not develop electromagnetic showers due to the suppression of bremsstrahlung compared to electrons.

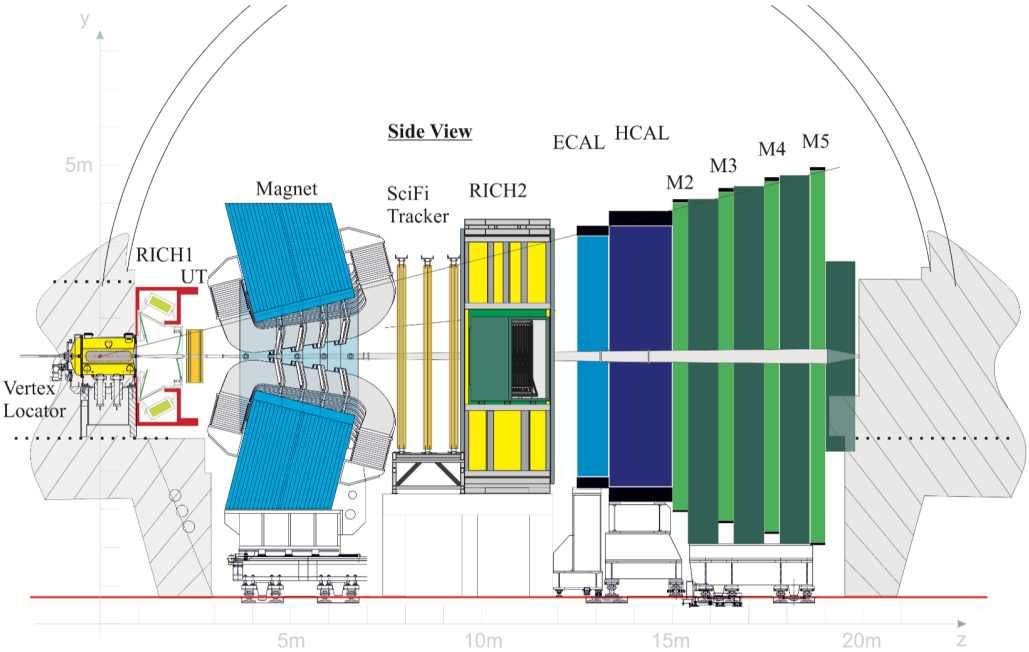

Figure 1: Schematic overview of the LHCb detector and its subsystems in Run 3 [1]. The SciFi Tracker is highlighted in red.

1.2 Scintillating Fibre Tracker

During a major upgrade of the entire LHCb detector (Upgrade I), the Scintillating Fibre (SciFI) Tracker was introduced as a replacement for the Inner and Outer Tracker, whose limited granularity made them inadequate for the higher track multiplicities of the Upgrade I environment. The SciFi Tracker is indispensable for the reconstruction of the tracks bent by the strong magnetic field. It consists of three tracking stations, with four layers each that are arranged in a $x - u - v - x$ geometry, where the u- and v-layers are rotated by $\pm 5°$ around the beam axis. The x layers have their fibres oriented vertically to provide a measurement of the deflection of charged particles in the magnetic field with a resolution of $<100\,\mu\text{m}$, while the u and v provide additional information on the vertical position.

The detector is covers a sensitive area of $340\,\text{m}^2$ using more than 10 000 km of scintillating fibre .The fibres have a diameter of 250 µm and are wound into a dense matrix of six staggered layers that form the 2.4 m long and 13 cm wide fibre mats. After winding, the fibre mat is cut to size to ensure well-defined edges. In Figure 2, the cross-section of such a mat is depicted. One end of these mats is equipped with a mirror that reflects the scintillation light towards the opposite end, where the readout is located. Eight fibre mats are combined into larger modules, measuring 0.5 m in width and 4.8 m in height[2]. The arrangement of the modules to one tracking station is shown in Figure 3.

When a charged particle traverses the fibres it deposits part of its energy, resulting in the emission of scintillation photons. Arrays of silicon photomultipliers with a channel pitch of 250 µm, placed at the end of the fibre mats, detect the scintillation photons and convert them into electrical signals. The signals are then processed and digitised by custom electronics, before the data are

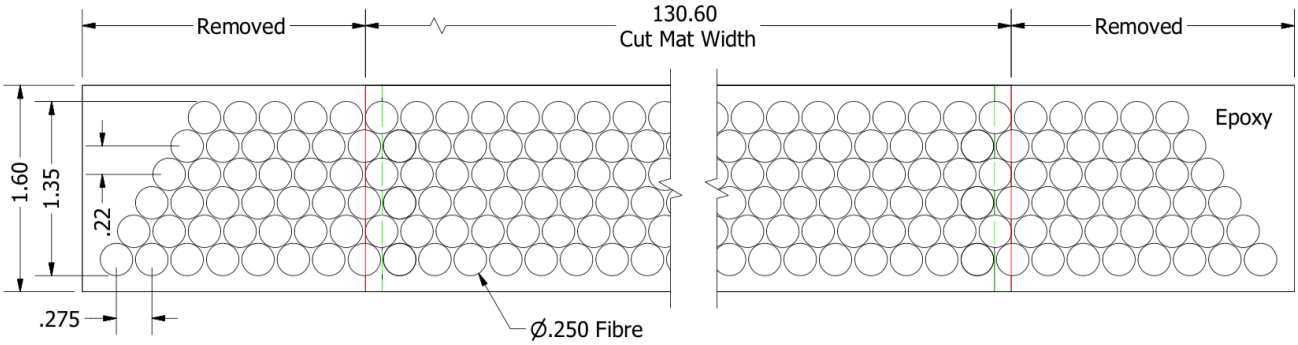

Figure 2: Schematic cross-section of a fibre mat with six staggered layers of scintillating fibres. The mat is cut along the red lines [3].

sent via optical links to the data acquisition system. A detailed description of the scintillation mechanism is given in Section 1.3.1.

1.3 Scintillating Fibres

The scintillating fibres used in the SciFi Tracker consist of a polystyrene core with a diameter of 220 µm and two cladding layers with a thickness of 7.5 µm, resulting in a total fibre diameter of 250 µm. As shown in Figure 4, the refractive index is decreasing from the core to the outer claddings, resulting in total internal reflection at the interfaces.

Task: *Explain how a resolution of less than* 100 µm *can be achieved using* 250 µm *wide fibres. Hint: variance of uniform distribution*

1.3.1 Scintillation Mechanism

When an ionising particle traverses the fibre, the valence electrons of the polystyrene are excited. These electrons are not bound to a single atom and can move freely throughout the molecule. Their energy diagram is shown in Figure 5. Following the excitation, the electrons rapidly relax non-radiatively to the lowest vibrational level of the first excited state (S_{10}). The difference of the energy levels is typically of the order of a few eV. The vibrational states have a spacing of approximately 0.2 eV from each other. A UV photon is finally emitted when S_{10} relaxes to the ground state S_{00}.

In a scintillator made of pure polystyrene only about 3 % of excited S_{01} states decay radiatively to the ground state. This relatively poor, so-called quantum yield, results from the long average decay time of 308 ns of the radiative decay, competing with non-radiative transitions with a shorter decay time. To enhance the quantum yield, a primary dye (p-terphenyl) with a decay time of few nanoseconds is added to the polystyrene in small concentrations. Energy is first transferred to the dye via a non-radiative dipole-dipole interaction called Förster transfer and then emitted as photons [4].

Photons emitted from the p-terphenyl, however, are also quickly reabsorbed, resulting in an

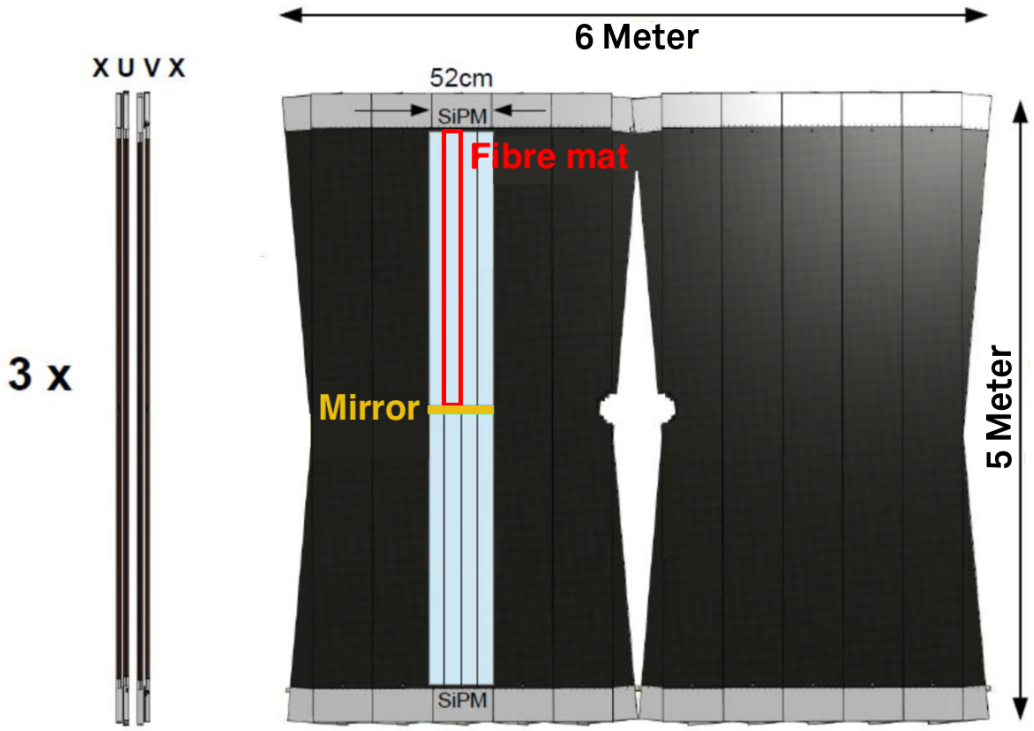

Figure 3: Schematic view of the SciFi Tracker. Left) Side of the image is a side view of a station consisting of four layers. Right) Front view of the SciFi Tracker, with the two halves slightly separated. A single fibre mat is highlighted in red [3].

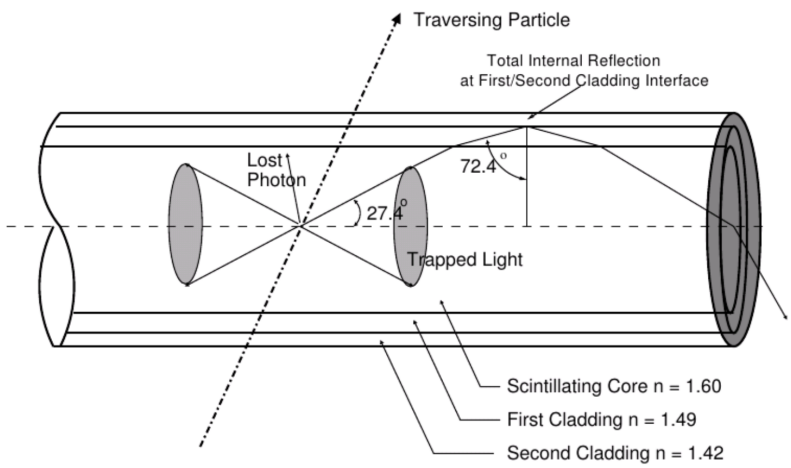

Figure 4: Schematic structure of the double-clad scintillating fibre used in the SciFi Tracker [1].

.

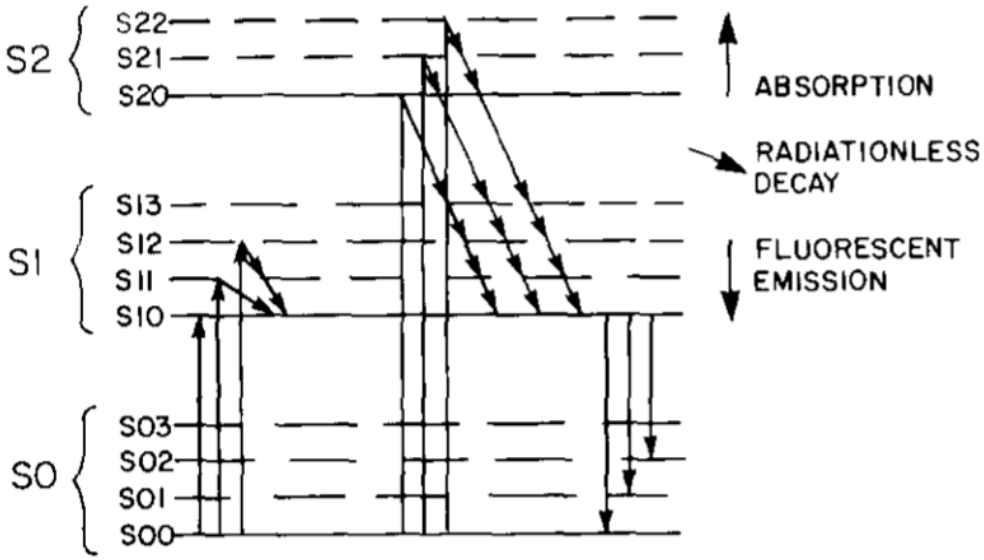

Figure 5: Schematic of the singlet energy levels of a typical organic scintillator. The dashed lines are vibrational modes. The energy levels are labelled with two quantum numbers S_{ij}, where i denotes the energy level of the electron and j denotes the different vibrational modes [4].

attenuation length of approximately 1 m, which is insufficient for the 2.5 m long fibre mats of the SciFi Tracker. To ensure that a sufficient number of photons reach the silicon photomultipliers, an attenuation length of at least 3 m is required. For this purpose a secondary dye, a so-called wavelength shifter, is added. The wavelength shifter is chosen such that its absorption spectrum closely matches the emission spectrum of the primary dye, but re-emits the photons at a longer wavelengths. In the case of the SciFi Tracker TPB (tetraphenyl-butadiene) is used as the wavelength-shifting material. The absorption and emission spectra of the materials used are shown in Figure 6.

1.3.2 Photon Transport

As shown previously in Figure 4, photons are transported along the fibre by total internal reflection at the interfaces of the different materials. Reflections at the interface of the outer cladding and the air can be neglected since the adhesive in which the fibres are later located does not allow total reflection at this interface anyway.

Task: *Based on the information in Chapter 1.3, calculate the maximum angle of total reflection relative to the fibre axis for meridional photons (photons crossing the centre axis of the fibre).*

For the later evaluation, it is also essential to derive an expression for the path length L and the number of reflections N of a photon depending on their distance to the fibre end x, as well as its angle θ to the fibre central axis. This is non-trivial for the case where the photon under consideration penetrates the cladding. However, this is relatively easy to calculate analytically for

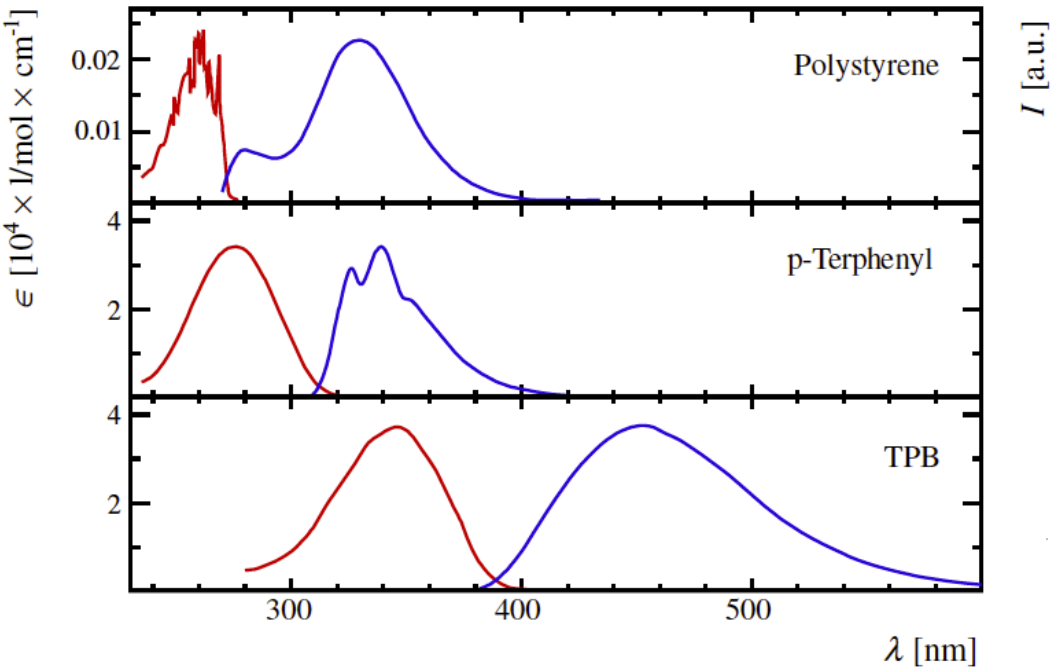

Figure 6: Absorption (red) and emission (blue) spectra of polystyrene and the added dyes p-terphenyl and TPB [1].

photons moving exclusively in the core where the following applies

$$L = \frac{x}{\cos\theta} \quad \text{and} \quad N = \frac{x\tan\theta}{2\sqrt{r_{\text{core}}^2 - r_{\text{min}}^2}}\,, \tag{1}$$

with the radius of the core material r_{core} and the smallest distance of the photon path to the centre axis of the fibre r_{min}, as shown in Figure 7. It can be seen that the total length is not affected by this, but the number of reflections increases.

For large values of r_{min}, photons propagate along increasingly helical trajectories within the fibre. As a result, the effective angle, with respect to the centre of fibre, can be larger than the previously calculated critical angle. This effect becomes particularly evident in the limiting case where r_{min} approaches the core radius. No matter which angle θ is chosen, the angle to the interface θ_{refl} (under which total reflection happens) is then always 0°. From simple geometric considerations, it can be deduced that the angle to the interface is

$$\theta_{\text{refl}} = \arcsin\left(\sqrt{1 - \frac{r_{\text{min}}^2}{r_{\text{core}}^2}}\sin(\theta)\right)\,. \tag{2}$$

Even for photons with a large r_{min}, θ cannot become arbitrarily large since the photons must still exit the fibre at the end. In particular, total internal reflection may also occur at the fibre end face, which limits the range of angles that contribute to detectable light.

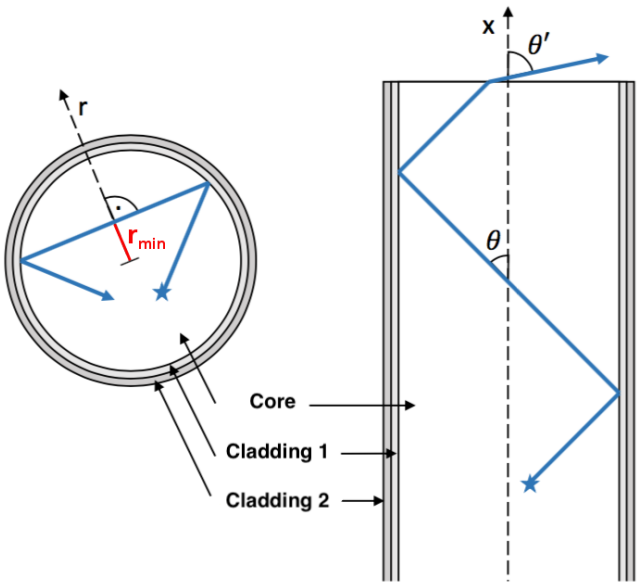

Figure 7: Movement of a non-meridional photon through the fibre. On the left side, a cross-section through the fibre is shown. The smallest distance of the photon path to the fibre axis is denoted by r_{min}. On the right side, a side view of the same photon path is shown. The angle θ is defined as the angle to the central axis of the fibre [5].

When light is guided along the fibre, photons may be lost due to various processes. For example, if the photons undergo Rayleigh scattering on the fibre material, they may no longer satisfy the condition for total internal reflection. Furthermore, absorption can occur through various mechanisms. Molecular vibrations can be excited, and the self-absorption of the wavelength shifter cannot be neglected, especially for short wavelengths. The resulting absorption coefficient a is plotted in Figure 8 for different wavelengths. The attenuation of photons after a path length L in the fibre is generally described by

$$I(x) = I_0 e^{-\frac{L}{\Lambda}} \,, \tag{3}$$

where Λ describes the attenuation length, which is on average 3.5 m for the fibres used in the detector. The attenuation length is the inverse of the attenuation coefficient a.

During propagation towards the fibre end, two main loss mechanisms dominate [6]. The first is the absorption and scattering by the fibre material itself (A_{core}), while the second arises from losses occurring at reflections at the interfaces between the materials (A_{refl}). These two mechanisms exhibit different angular dependencies, which allows them to be separated. The total intensity can therefore be written as

$$I(x,\theta) = I_0 A_{\text{core}}(x,\theta) A_{\text{refl}}(x,\theta) \,. \tag{4}$$

Losses in the fibre material depend exponentially on the path length L travelled by the photon and are characterized by the attenuation length Λ.

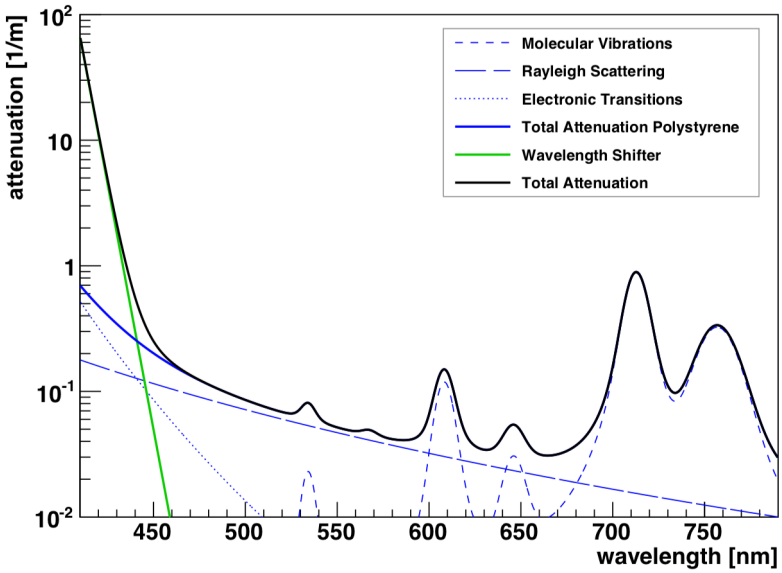

Figure 8: Wavelength dependence of the attenuation coefficient of the scintillating fibres used here and the individual components. This coefficient only refers to attenuation when passing through the fibre material. Any reflection losses are not taken into account [5].

The losses in the core material can be described by

$$A_{\text{core}}(x,\theta) = \exp\left(-\frac{L(x,\theta)}{\Lambda}\right) . \tag{5}$$

The reflection coefficient ϵ describes the probability of a photon being lost in a single reflection at the core-cladding interface. The total number of reflections $N(x,\theta)$ depends on the exact shape of the photon path in the fibre.

For reflection losses $\epsilon \ll 1$, the losses due to reflection can be written as

$$A_{\text{refl}}(x,\theta) = (1-\epsilon)^{N(x,\theta)} = \exp\left(N(x,\theta)\ln(1-\epsilon)\right) \approx \exp\left(-N(x,\theta)\epsilon\right) , \tag{6}$$

which results in the total intensity:

$$I(x,\theta) = I_0 \exp\left(-\frac{L(x,\theta)}{\Lambda} - N(x,\theta)\epsilon\right) . \tag{7}$$

This approximation is valid since the reflection losses are in the order of 1×10^{-5}. When the relations in Equation 1 are inserted here, the result is

$$I(x,\theta) = I_0 \exp\left(-x\left(\frac{1}{\Lambda\cos\theta} + \frac{\epsilon\tan\theta}{2\sqrt{r_{\text{core}}^2 - r_{\text{min}}^2}}\right)\right) . \tag{8}$$

Finally, an effective attenuation a_{eff} can be defined:

$$a_{\text{eff}} = \frac{a_0}{\cos\theta} + \frac{\epsilon\tan\theta}{2\sqrt{r_{\text{core}}^2 - r_{\text{min}}^2}} . \tag{9}$$

As can be seen from Equation 8, the reflection losses disappear completely at an angle of 0°. Thus, the attenuation length of the fibre can be investigated separately without the influence of reflection losses.

1.4 Silicon Photomultiplier Readout

To detect the photons produced by the fibres, silicon photomultipliers (SiPMs) are attached to the ends of the fibre mats in the SciFi Tracker. These devices consist of a matrix of avalanche photodiode pixels operated in Geiger mode. When a photon is absorbed in a pixel, it generates an electron-hole pair, which is separated and accelerated by the applied electric field. During this process, the electrons gain sufficient energy to free more electron-hole pairs, resulting in an avalanche of charge carriers. These avalanches of about 10^6 electrons can be detected as a current pulse. The avalanche is quenched by a serial resistor and the pixel becomes sensitive again.

One of the most important characteristic of SiPMs is their photodetection efficiency (PDE). This wavelength-dependent parameter describes the ratio of detected to actual incident photons. The wavelength dependence is shown in Figure 9 and is approximately 43 % at maximum. Another essential characteristic is the dark current rate, which is temperature dependent. To suppress thermally induced noise, the SiPMs are operated at a temperature of −40 °C.

It should be noted that the SiPMs do not provide information about the wavelength of the incident photons. In addition, they are mounted such that they detect the total light emerging from the fibre end. To investigate the dependence of the attenuation on wavelength and angle, dedicated measurements using a spectrometer capable of resolving different wavelengths at different angles are required.

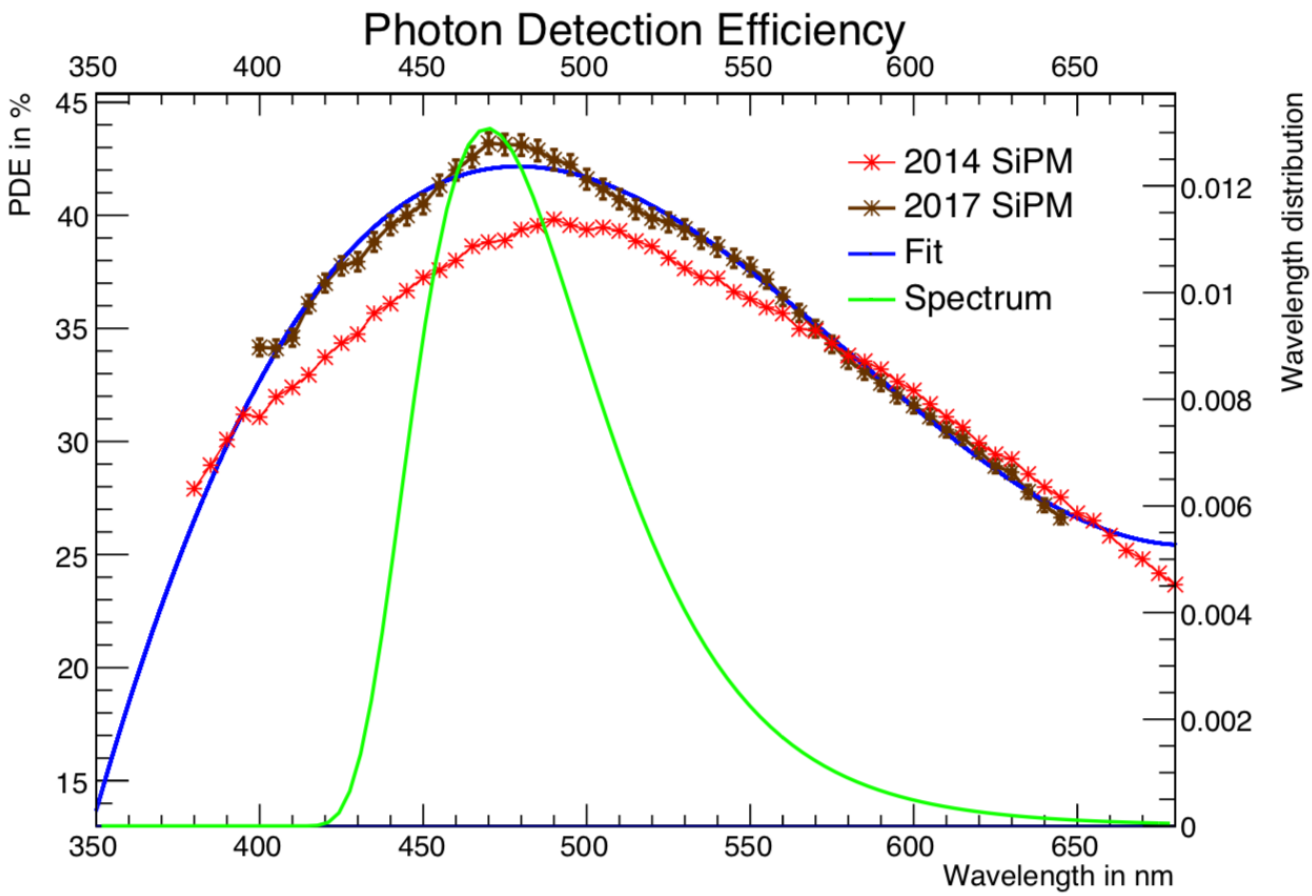

Figure 9: Photodetection efficiency at different wavelengths. In brown, the measured efficiencies for the 2017 models are shown. In green, the emission spectrum of polystyrene is shown [7].

2 Simulation

To evaluate a detector's performance before it is constructed, Monte Carlo simulations can be employed. In this lab course, one such simulation models a single fibre. The results of this single-fibre simulation can then be combined with those of other simulations to draw conclusions about the entire subdetector. It is therefore essential that the physical processes in the single fibre simulation are implemented as realistically as possible in order to obtain reliable and meaningful results.

The single fibre simulation is implemented in GEANT4 and models the propagation of individual photons through the fibre. Various interaction mechanisms, such as Rayleigh scattering, attenuation in the materials and reflections at the interfaces, are considered.

For the simulation dataset, 50 fibres were excited and simulated at 24 points each. The results of the individual simulations are stored in one single pickle file, where every 50 entries corresponds to a new fibre. The excitation points are located at a distance of 2400 mm to 100 mm from the fibre end, with a spacing of 100 mm.

A detector volume is placed at the end of the fibre, which registers all photons hitting it and stores their parameters. The coordinate system is set so that the centre axis of the fibre runs along the x-axis. The stored parameters are:

- y_exit, z_exit: y- und z-coordinates where the photon left the end of the fibre (in Millimeter)
- x_start, y_start, z_start: coordinates, where the photon was created (Millimeter)
- px_start, py_start, pz_start: Components of the momentum direction along the individual axes at the creation of the photon. It holds $p_x^2 + p_y^2 + p_z^2 = 1$
- reflCoCl, reflClCl: number of reflections at the core-cladding or cladding-cladding interface
- wl: wavelength of the photon (in Nanometer)
- gpsPosX: x-coordinate where the primary particle for the excitation of the fibre was created (in Millimeter)
- length_core, length_clad: distance travelled in the core or cladding (in Millimeter)
- rayleighScatterings: number of Rayleigh scatterings the photon experienced

3 Experimental Setup

The experimental setup consists of a scintillating fibre, a light source (LED) and a spectrometer. The LED can be moved along the fibre, while the spectrometer can be positioned at different horizontal and vertical angles around the fibre end. All motors, as well as the LED and the spectrometer, are controlled by a dedicated software. The spectrometer reaches saturation at approximately 65.000 counts. The ambient light in the laboratory causes the fibre to be excited, therefore photons can be detected even when the LED is switched off. To correct this background contribution, a dark count measurement (measurement while LED is switched off) is done before

each data acquisition. The corresponding count rates, recorded without LED turned on, are subtracted from the measurements with the LED switched on. A constant dark current signal of approx. 600 counts is expected.

A specially developed device can move the spectrometer along a horizontal and vertical angle. However, this is not possible completely symmetrically around the end of the fibre, as the device itself would collide with the fibre. Therefore, it can only scan the angular intervals [-20°,90°] horizontally and [-6°,90°] vertically.

3.1 Commissioning of the setup

1. Switch on the three power supplies (Ask supervisor to do this even before the colloquium!)
   - x-axis motor
   - angular motors and the x-axis fan
   - LEDs
2. Then start the PC
3. Start programme
   - Open the terminal.
   - if you get lost: just type cd (**c**hange **d**irectory), this will bring you back to the home directory
   - `cd repos/XYTable/build/`
   - `./bin/xyTableMain` (starts the programme)
   - follow the instructions of the programme
   - the data will be saved in the folder `data/Spectrometer/`
4. check if everything is working with the system check function.
   - This function moves the motors of the x-axis, the horizontal angle and the vertical angle. (Visual check. Since the motors have been detected in a previous step, they should move). Check if there is any stalling of the motor.
   - It is also tested to see if the LED is working.
   - Finally, a graphical user interface is called up with which test spectrometer measurements can be made.
5. now everything should be ready for use
6. The execution of a ReferenceRun is recommended before each new series of measurements.

If you are asked to update, decline. An update of the PC and/or operating system would be fatal for the experiment.

4 Tasks

4.1 Spectrometer Measurement

A spectrometer measurement is to be carried out with the room light switched on and the room light switched off. Any small angle should be used for the measurement. This measurement can be made with a graphical user interface (GUI). This is located in `repos/SpectrometerClass/Spectrometer_gui/build` and can be started with the command `./bin/SpectrometerGUI`. The maximum current of 20 mA should be used. The integration time should be set to 10000μs in **all** measurements and the number of averages to 5. The "`single`" option can be used to display the light spectrum in the GUI. To start the measurement, select "`Dark + Light`" and enter a group-specific storage location. The measurement starts with a click on "`Measure`".
The intensity (counts) should be plotted against the wavelength, in each case for room light switched on and room light switched off. The plot should be repeated, with the dark counts subtracted from the intensity. In the following, the adjusted, "cleaned" intensity is always denoted as the intensity.

4.2 Radial Symmetry

In this measurement, the radial symmetry of the light intensity is to be verified. To do this, the light intensity is to be recorded for different angles with a fixed excitation position. The horizontal angles should cover a range from $-18°$ to $30°$ and the vertical angle a range from $-6°$ to $35°$. The intensity should be displayed in a two-dimensional histogram.

4.3 Simulation

1. First of all, unphysical simulation errors must be corrected. To do this, the distance between the exit point and the center of the fiber must be determined. What value must this not exceed? Then all photons that have caused Rayleigh scattering should be removed. The simulated data set should be divided into core and cladding photons.

2. The angle θ of the photon to the x-axis (fiber) is not a parameter of the simulated photons. How can this be determined from the direction of momentum? The momentum is standardized.

3. The maximum angle at which total internal reflection can still occur is to be determined for the core and cladding photons (Mathematically, not using a script, but using your own calculations).

4. θ is to be histogrammed for core and cladding photons (in a plot) and the theoretical maximum angles are to be marked. Where does the supposed linear increase come from? Why are there photons with a higher angle than the maximum angle?

5. The minimum distance of the photons to the fiber center should be determined (distance of two lines). Now a two-dimensional histogram of θ and the minimum distance is to be

created, in each case for core and cladding photons. How does the distribution come about? Why are no photons detected above a certain angle?

6. The intensity is to be determined for different angles in relation to the excitation location. Use a fit to determine the attenuation length.

4.4 Intensity Measurement

The x-dependent intensity is to be determined for 10 different angles (0° to 40°). To do this, 20 excitation locations should be selected. Use the recorded data to determine the attenuation length and compare it with the simulation.

References

[1] LHCb Collaboration. "LHCb Tracker Upgrade Technical Design Report". Tech. rep. CERN-LHCC-2014-001. LHCB-TDR-015. Feb. 2014. URL: https://cds.cern.ch/record/1647400.

[2] A. Massafferri. 'SciFi, the new Tracker of the LHCb experiment'. In: *JINST* 15.08 (Aug. 2020), p. C08006. DOI: 10.1088/1748-0221/15/08/C08006.

[3] LHCb Scintillating Fibre Collaboration. "LHCb Scintillating Fibre Tracker Engineering Design Review Report: Fibres, Mats and Modules". Tech. rep. LHCb-PUB-2015-008. CERN-LHCb-PUB-2015-008. Geneva: CERN, Mar. 2015. URL: https://cds.cern.ch/record/2004811.

[4] A. Davis et al. 'Scintillating optical fiber trajectory detectors'. In: *Nuclear Instruments and Methods in Physics Research Section A: Accelerators, Spectrometers, Detectors and Associated Equipment* 276.1 (1989), pp. 347–358. ISSN: 0168-9002. DOI: 10.1016/0168-9002(89)90651-7. URL: http://www.sciencedirect.com/science/article/pii/0168900289906517.

[5] R. J. Ekelhof. '"Studies for the LHCb SciFi Tracker - Development of Modules from Scintillating Fibres and Tests of their Radiation Hardness"'. Presented 18 May 2016. PhD thesis. Mar. 2016. URL: https://cds.cern.ch/record/2212494.

[6] H. Blumenfeld, E. Gaillard and P. Rebourgeard. '"Measurement of the reflection coefficient at the core-cladding interface in plastic scintillating fibers"'. In: *Nuclear Instruments and Methods in Physics Research Section A: Accelerators, Spectrometers, Detectors and Associated Equipment* 309.1 (1991), pp. 169–178. ISSN: 0168-9002. URL: http://www.sciencedirect.com/science/article/pii/016890029190098B.

[7] M. Demmer et al. "Simulation of Light Yield Attenuation Maps for the LHCb SciFi Tracker Upgrade". Tech. rep. LHCb-INT-2016-015. CERN-LHCb-INT-2016-015. Geneva: CERN, Mar. 2016. URL: https://cds.cern.ch/record/2141533.