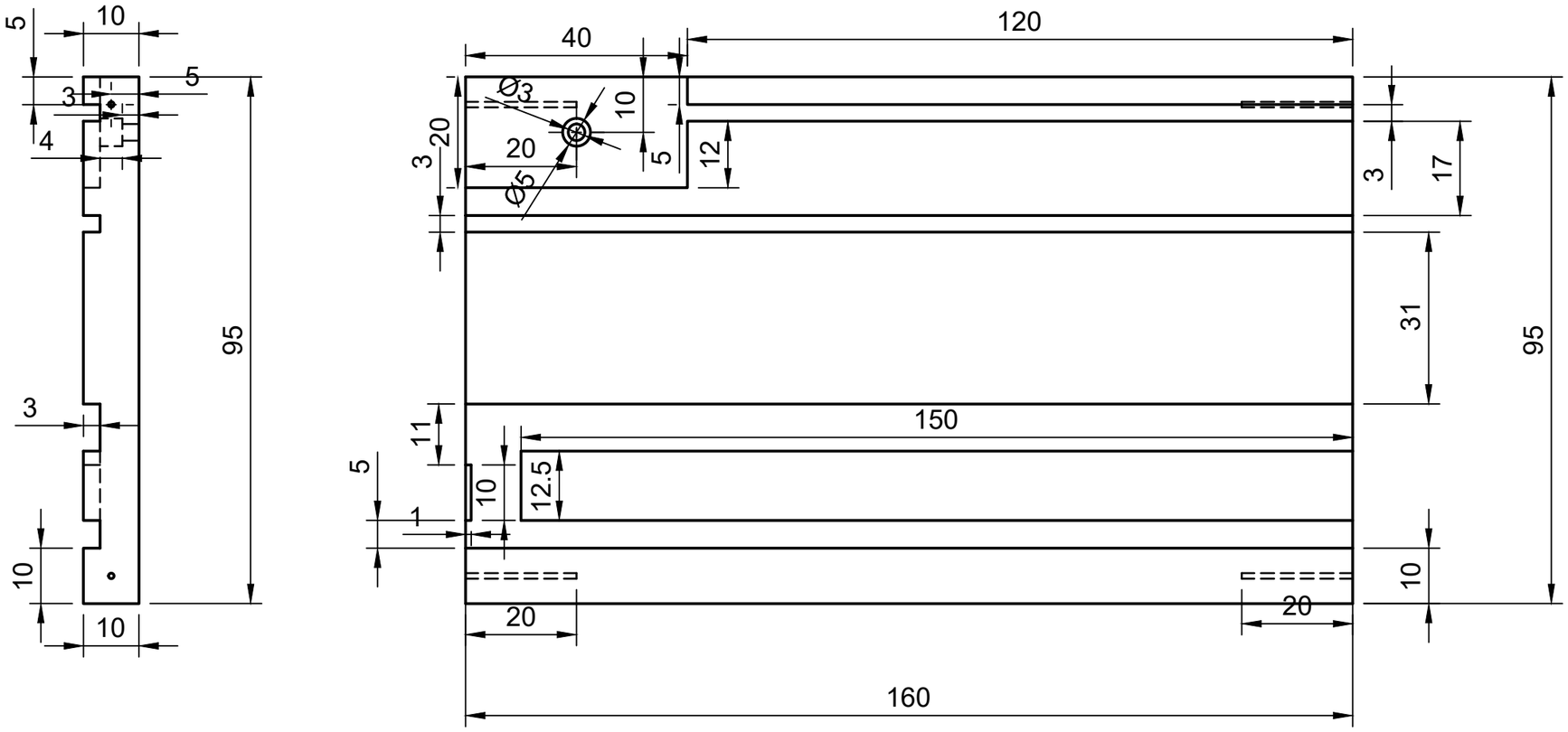

Dept.	Technical reference	Created by S Simpson41 Ss 03/10/2017	Approved by	
		Document type	Document status	
		Title Right Side Cover v1	DWG No.	
			Rev. / Date of issue	Sheet 1/1