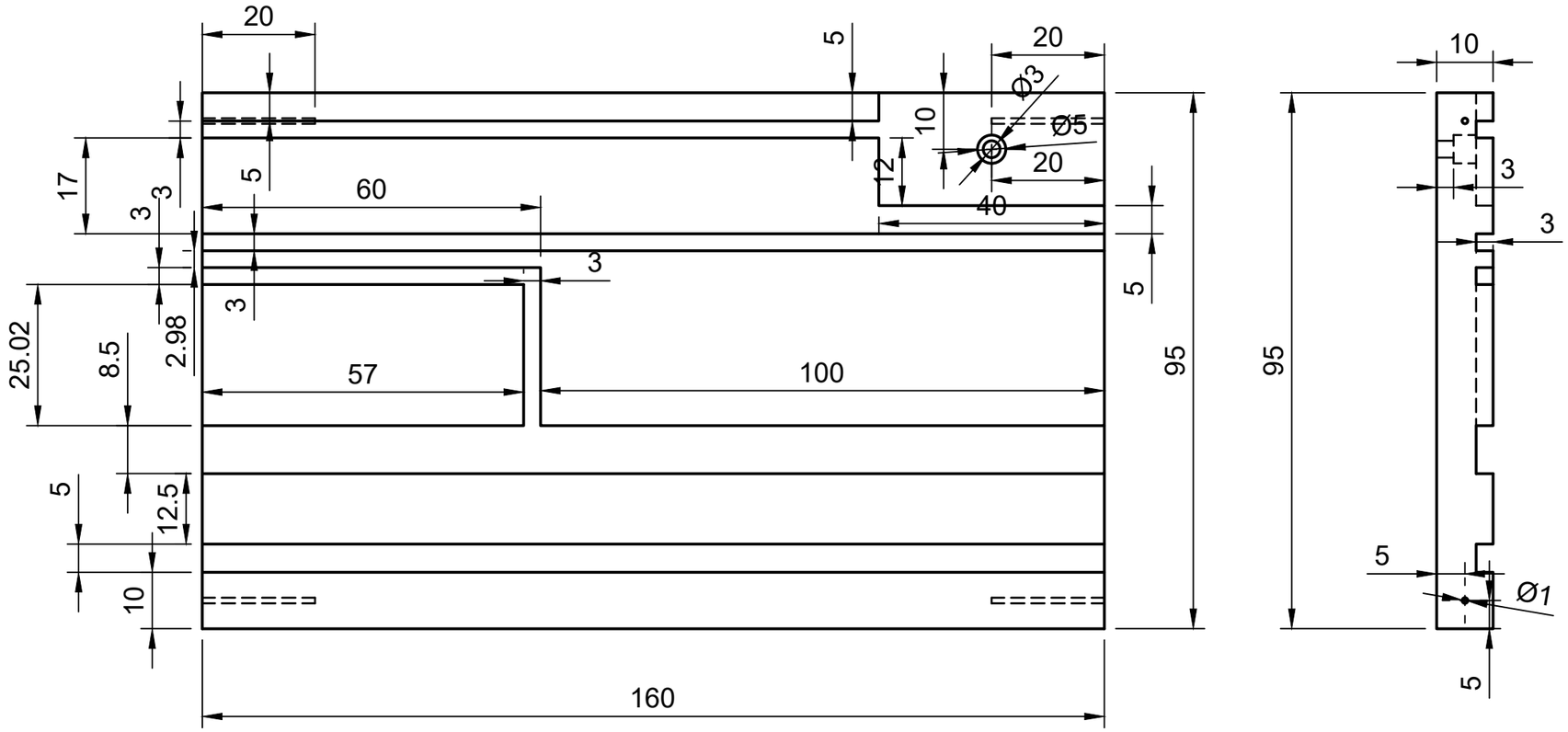

Dept.	Technical reference	Created by	Approved by
		S Simpson41 Ss 03/10/2017	
		Document type	Document status
		Title	DWG No.
		Left Side Cover v1	
		Rev. / Date of issue	Sheet 1/1