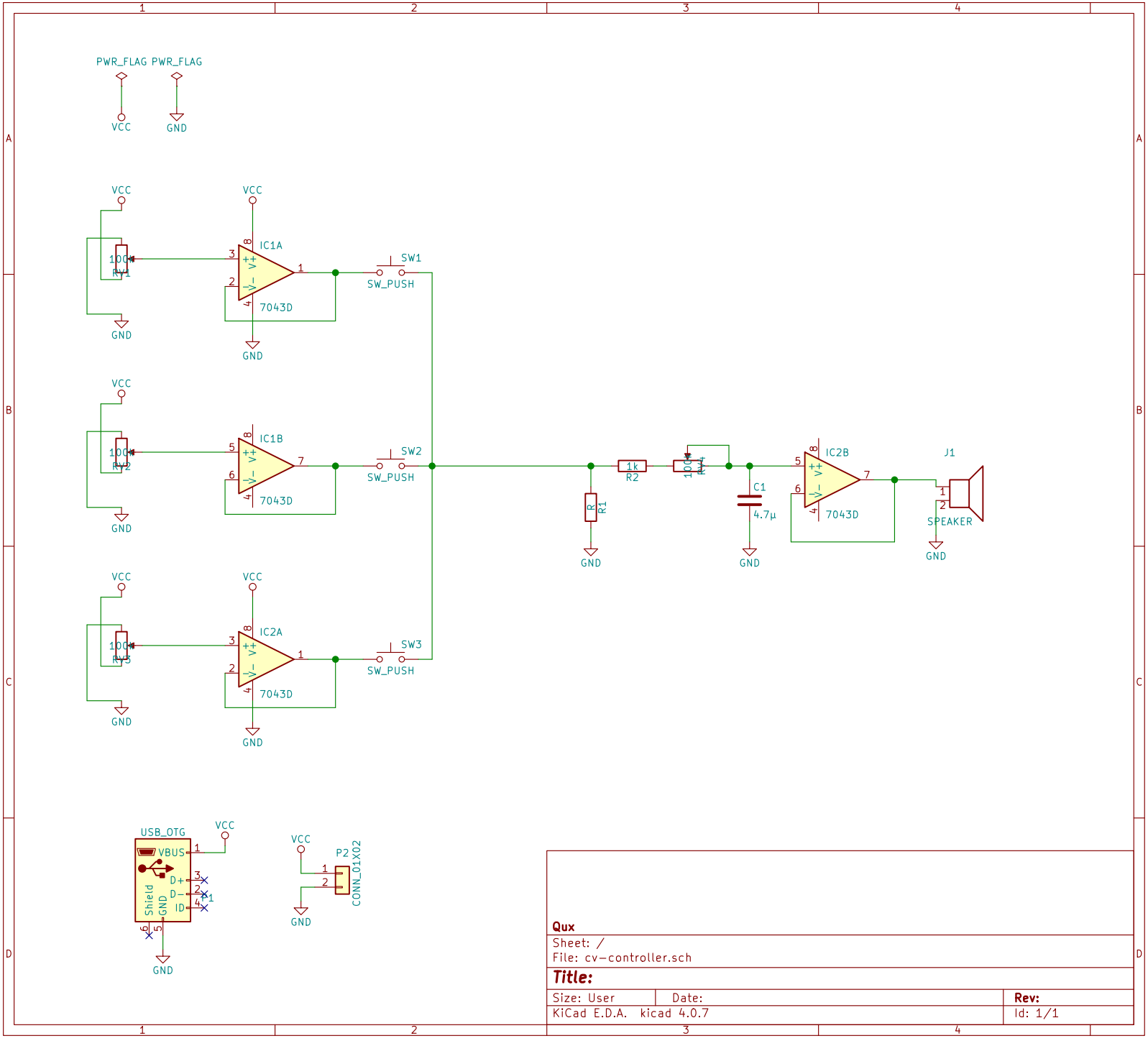
PWR_FLAG
PWR_FLAG
VCC
GND
IC1A
IC1B
IC2A
IC2B
7043D
SW1
SW2
SW3
SW_PUSH
R1
R2
R3
1k
100
RV1
C1
4.7µ
J1
SPEAKER
USB_OTG
VBUS
D+
D−
ID
Shield
GND
P1
P2
CONN_01X02
Qux
Sheet: /
File: cv-controller.sch
Title:
Size: User
Date:
Rev:
KiCad E.D.A. kicad 4.0.7
Id: 1/1