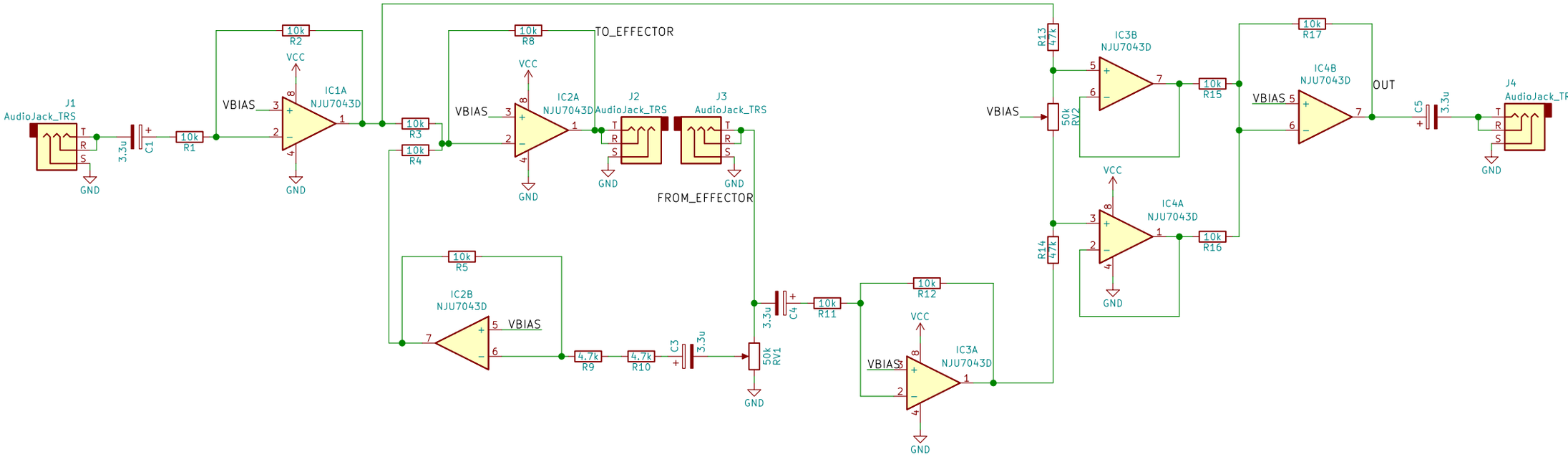

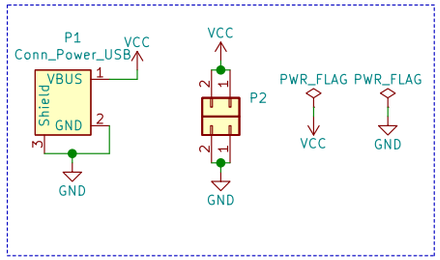

Power

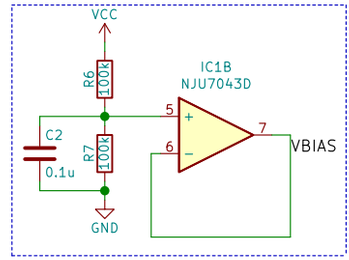

Generate half of VCC

Qux

Sheet: /

File: send_return.sch

Title:

Size: User	Date:	Rev:
KiCad E.D.A. kicad (5.1.6-0-10_14)		Id: 1/1