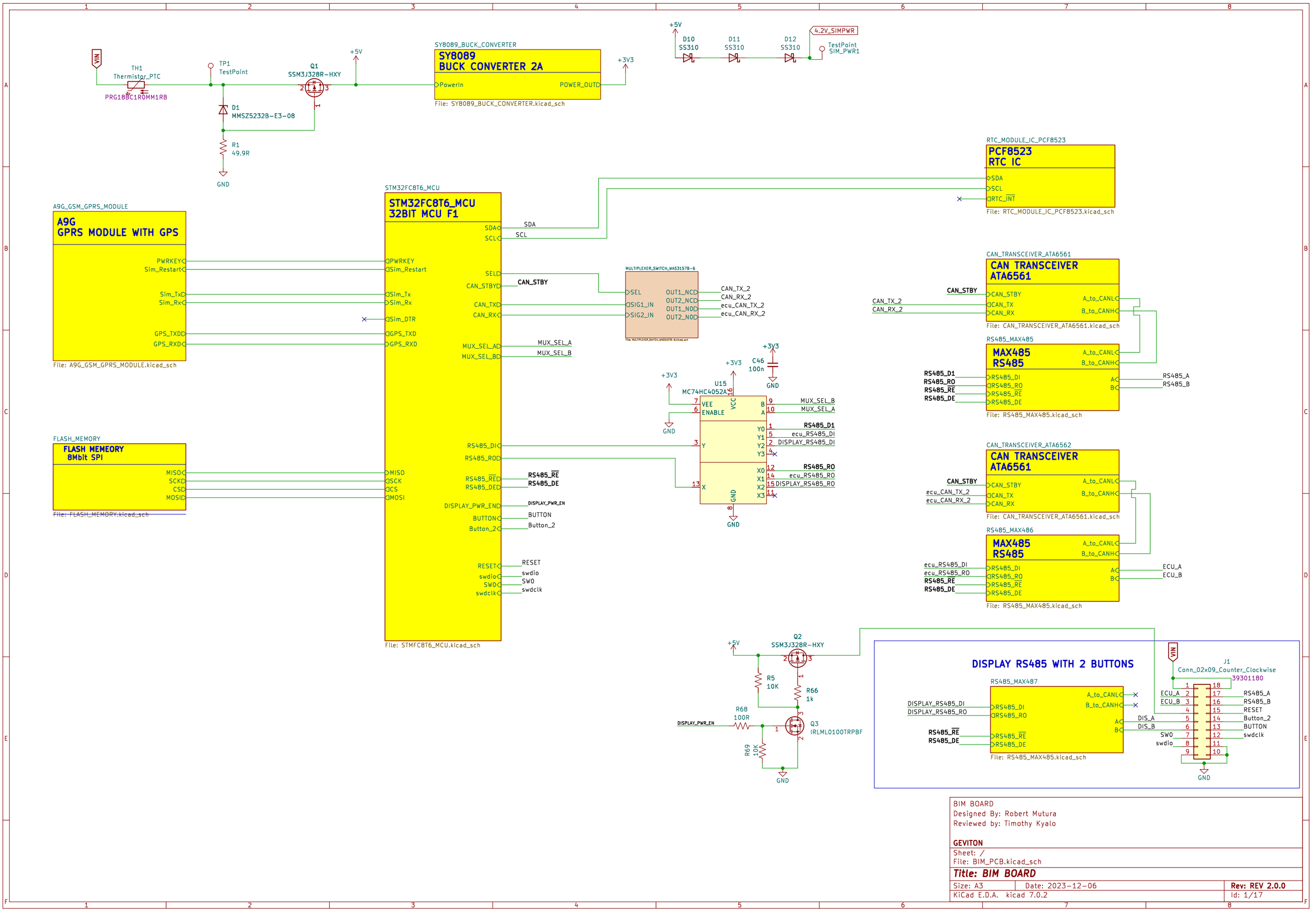

BIM BOARD
Designed By: Robert Mutura
Reviewed by: Timothy Kyalo

GEVITON

Sheet: /
File: BIM_PCB.kicad_sch

Title: BIM BOARD

Size: A3	Date: 2023-12-06	**Rev: REV 2.0.0**
KiCad E.D.A. kicad 7.0.2		Id: 1/17

STM32F103C8T6 MCU

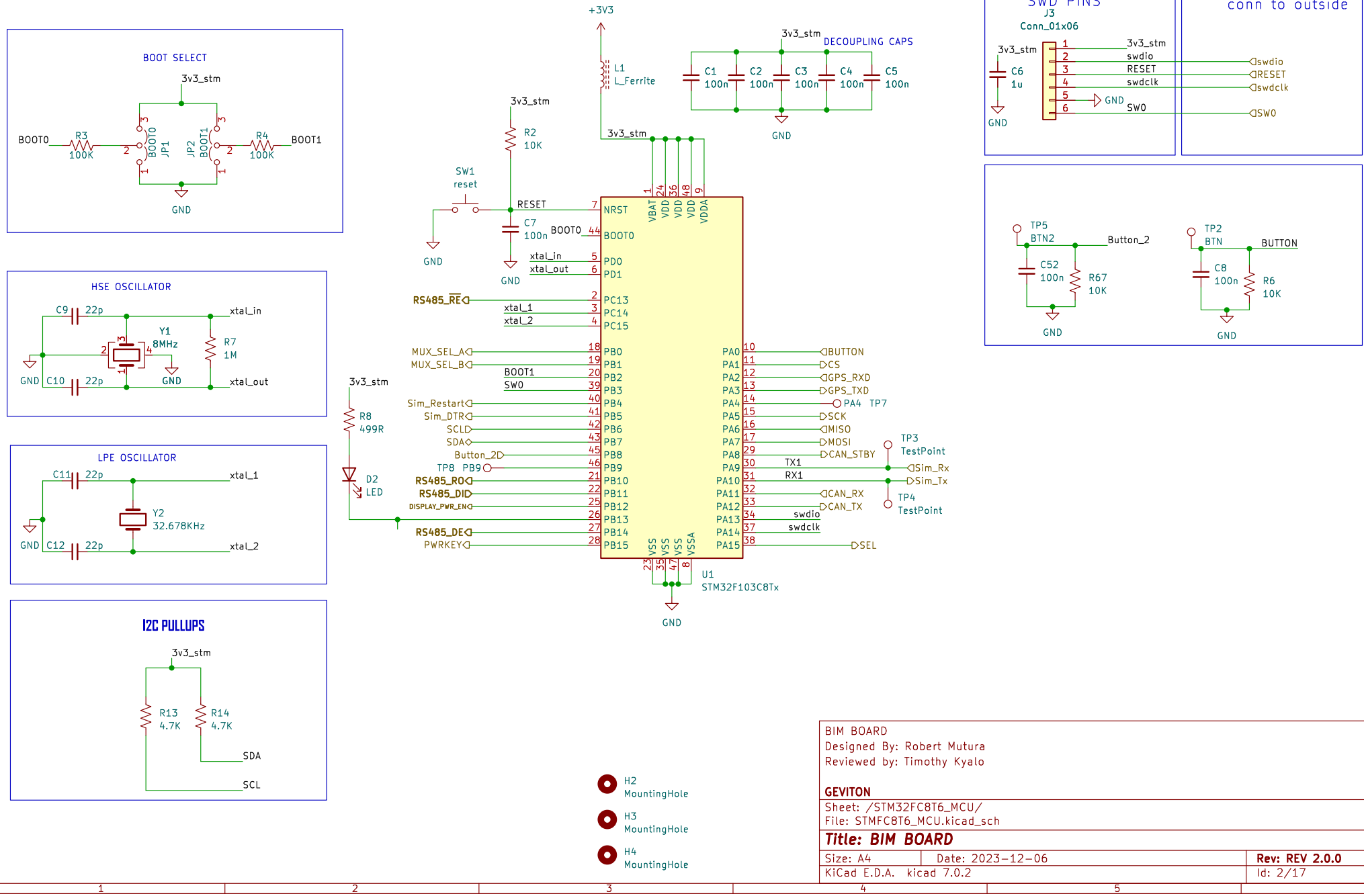

BIM BOARD
Designed By: Robert Mutura
Reviewed by: Timothy Kyalo

GEVITON

Sheet: /STM32FC8T6_MCU/
File: STMFC8T6_MCU.kicad_sch

Title: BIM BOARD

Size: A4	Date: 2023-12-06	**Rev: REV 2.0.0**
KiCad E.D.A. kicad 7.0.2		Id: 2/17

PCF8523
RTC IC

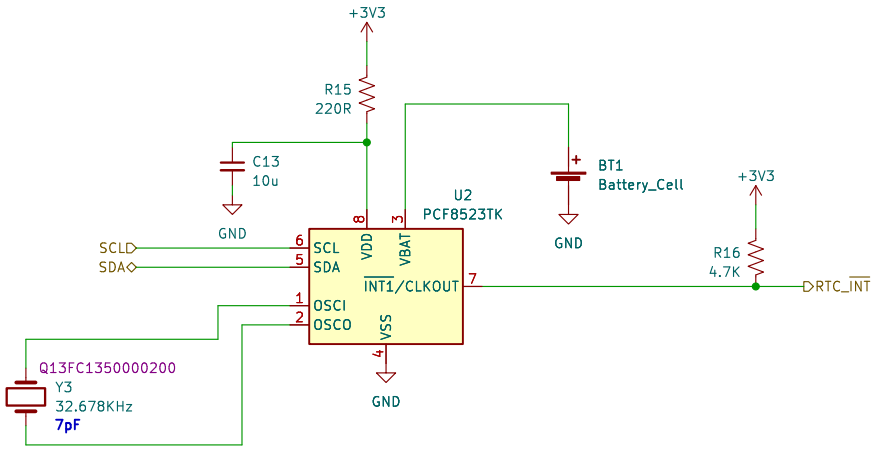

BIM BOARD
Designed By: Robert Mutura
Reviewed by: Timothy Kyalo

GEVITON

Sheet: /RTC_MODULE_IC_PCF8523/
File: RTC_MODULE_IC_PCF8523.kicad_sch

Title: BIM BOARD

Size: A4	Date: 2023-12-06	**Rev: REV 2.0.0**
KiCad E.D.A. kicad 7.0.2		Id: 3/17

RS485 MAX485E

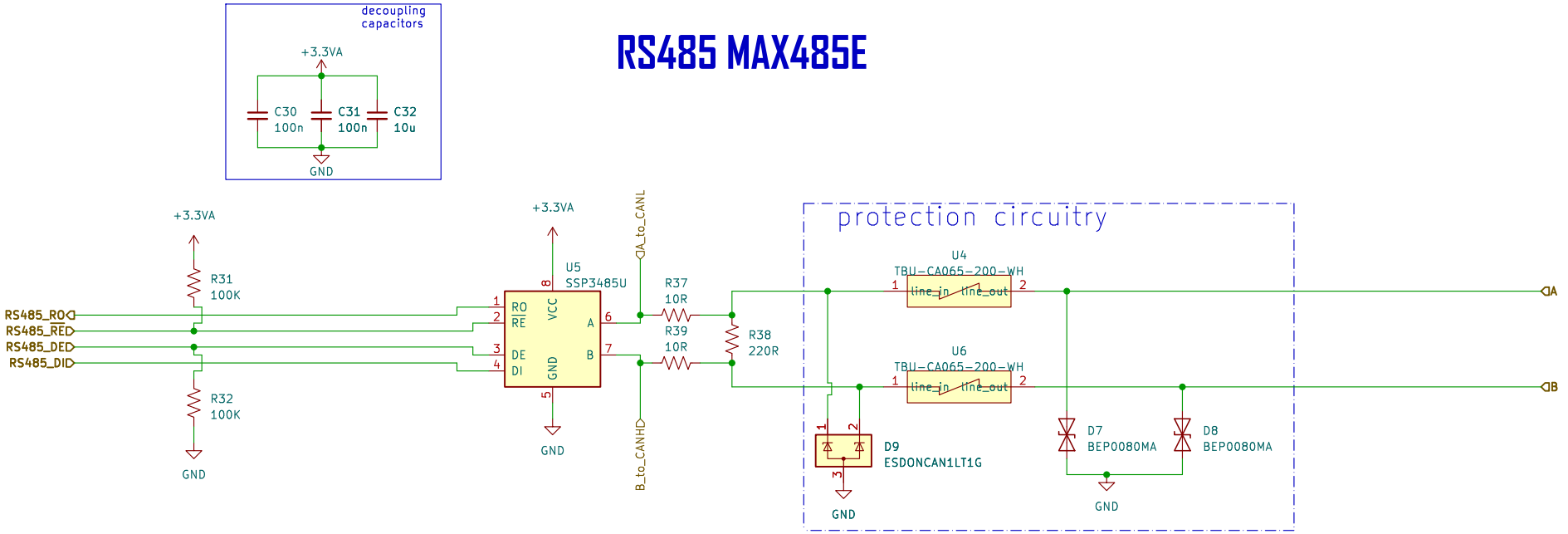

BIM BOARD
Designed By: Robert Mutura
Reviewed by: Timothy Kyalo

GEVITON

Sheet: /RS485_MAX485/
File: RS485_MAX485.kicad_sch

Title: BIM BOARD

Size: A4	Date: 2023-12-06	**Rev: REV 2.0.0**
KiCad E.D.A. kicad 7.0.2		Id: 7/17

ANALOG SWITCH / MULTIPLEXER IC

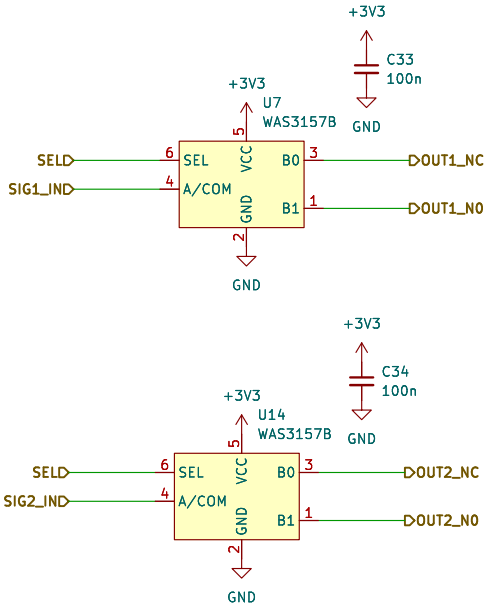

Sheet: /MULTIPLEXER_SWITCH_WAS3157B-6/
File: MULTIPLEXER_SWITCH_WAS3157B-6.kicad_sch

Title:

Size: A4	Date:	**Rev:**
KiCad E.D.A. kicad 7.0.2		Id: 8/17

FLASH MEMEORY

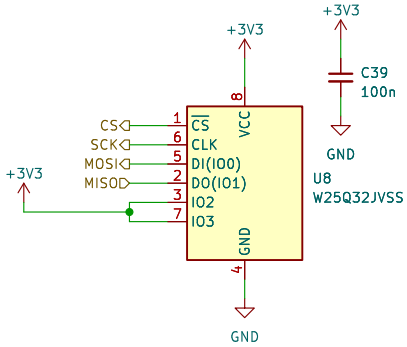

BIM BOARD
Designed By: Robert Mutura
Reviewed by: Timothy Kyalo

GEVITON

Sheet: /FLASH_MEMORY/
File: FLASH_MEMORY.kicad_sch

Title: BIM BOARD

Size: A4	Date: 2023-12-06	**Rev: REV 2.0.0**
KiCad E.D.A. kicad 7.0.2		Id: 9/17

CAN TRANSCEIVER
ATA6561

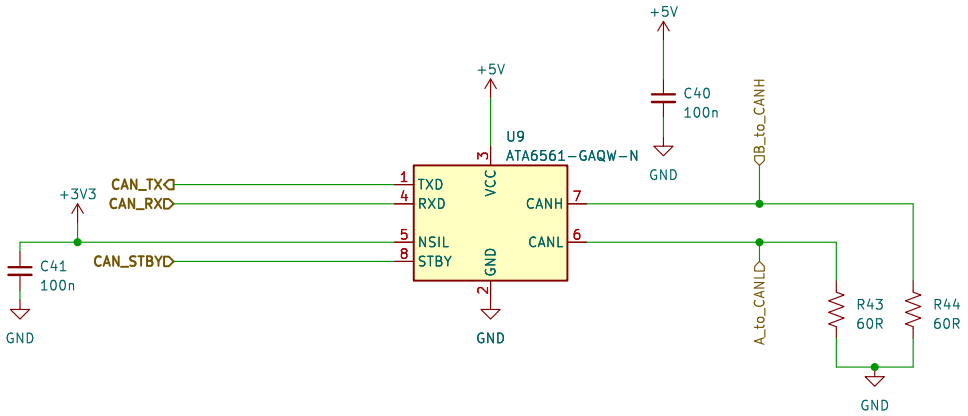

BIM BOARD
Designed By: Robert Mutura
Reviewed by: Timothy Kyalo

GEVITON

Sheet: /CAN_TRANSCEIVER_ATA6561/
File: CAN_TRANSCEIVER_ATA6561.kicad_sch

Title: BIM BOARD

Size: A4	Date: 2023-12-06	**Rev: REV 2.0.0**
KiCad E.D.A. kicad 7.0.2		Id: 10/17

RS485 MAX485E

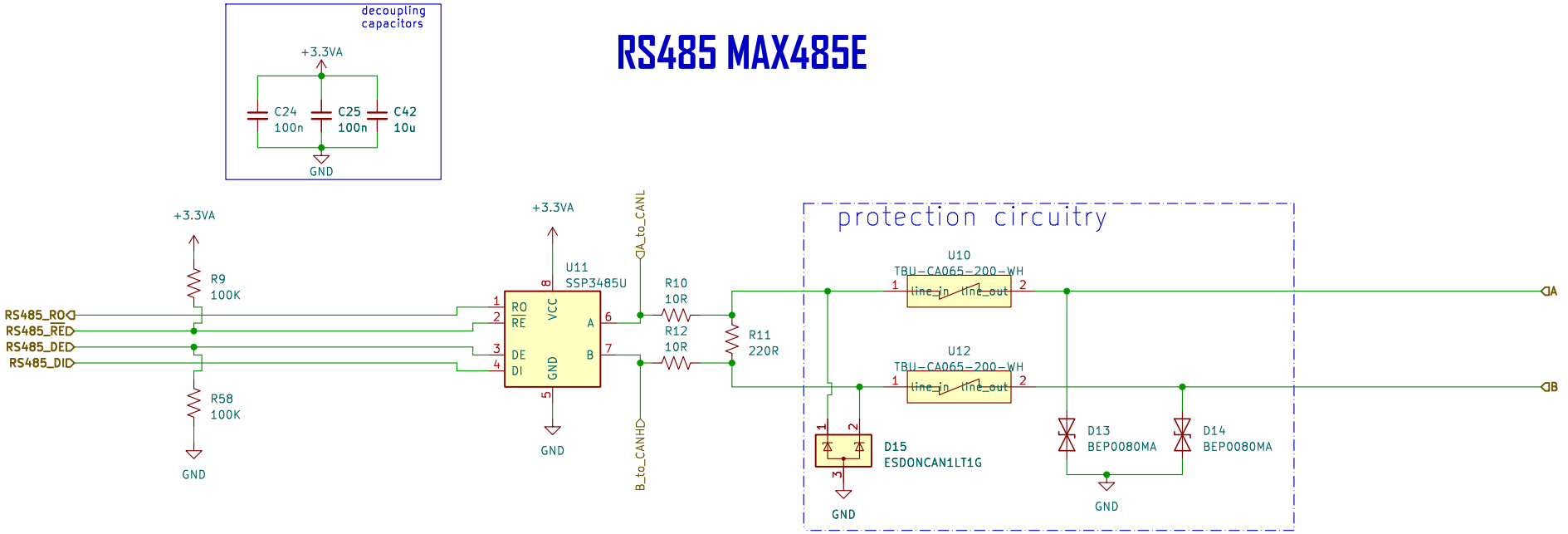

BIM BOARD	
Designed By: Robert Mutura	
Reviewed by: Timothy Kyalo	
GEVITON	
Sheet: /RS485_MAX486/	
File: RS485_MAX485.kicad_sch	
Title: BIM BOARD	
Size: A4	Date: 2023-12-06
KiCad E.D.A. kicad 7.0.2	**Rev: REV 2.0.0**
	Id: 15/17

CAN TRANSCEIVER
ATA6561

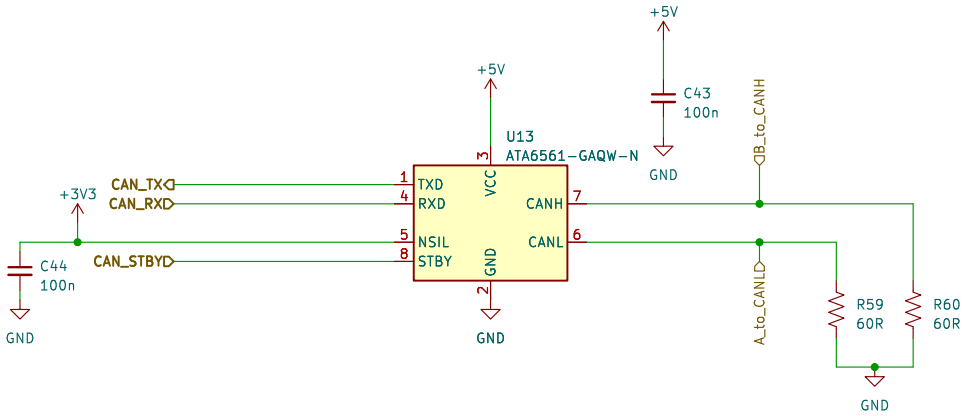

BIM BOARD
Designed By: Robert Mutura
Reviewed by: Timothy Kyalo

GEVITON

Sheet: /CAN_TRANSCEIVER_ATA6562/
File: CAN_TRANSCEIVER_ATA6561.kicad_sch

Title: BIM BOARD

Size: A4	Date: 2023-12-06	**Rev: REV 2.0.0**
KiCad E.D.A. kicad 7.0.2		Id: 16/17

BI-DIRECTIONAL LEVEL TRANSLATOR MOSFET - IMPLEMENTATION

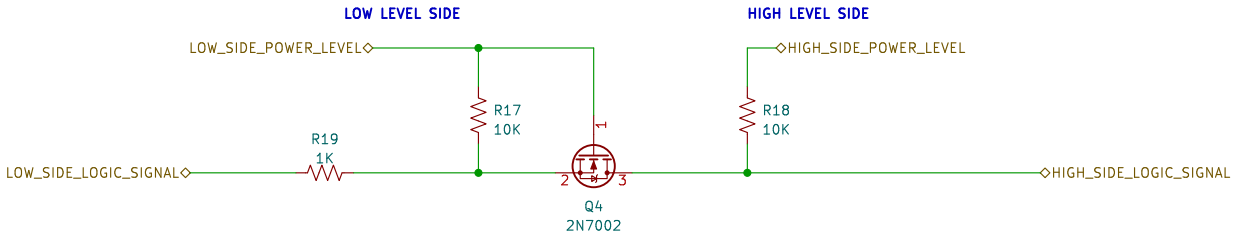

BIM BOARD
Designed By: Robert Mutura
Reviewed by: Timothy Kyalo

GEVITON

Sheet: /A9G_GSM_GPRS_MODULE/MOSFET_LOGIC_LEVEL_TRANSLATOR6/
File: MOSFET_LOGIC_LEVEL_TRANSLATOR.kicad_sch

Title: BIM BOARD

Size: A4	Date: 2023-12-06	**Rev: REV 2.0.0**
KiCad E.D.A. kicad 7.0.2		Id: 17/17

SIM MODULE POWER SUPPLY 4.2V/2A

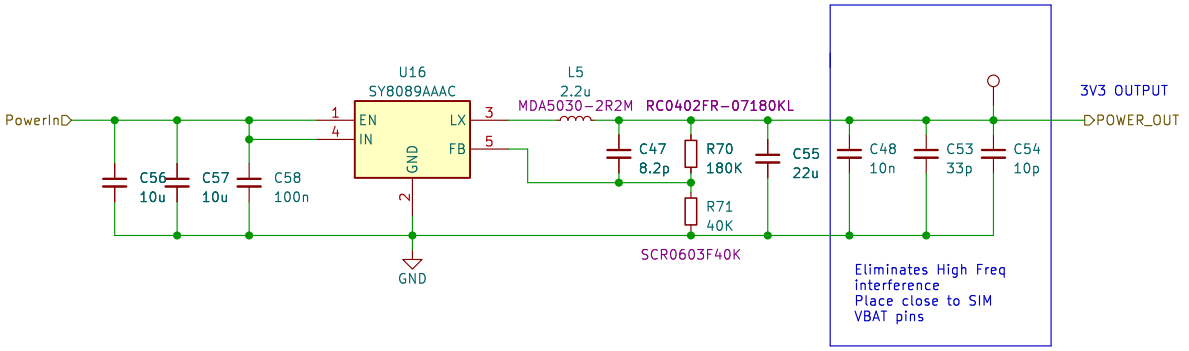

Sheet: /SY8089_BUCK_CONVERTER/		
File: SY8089_BUCK_CONVERTER.kicad_sch		
Title:		
Size: A4	Date:	**Rev:**
KiCad E.D.A. kicad 7.0.2		Id: 18/17

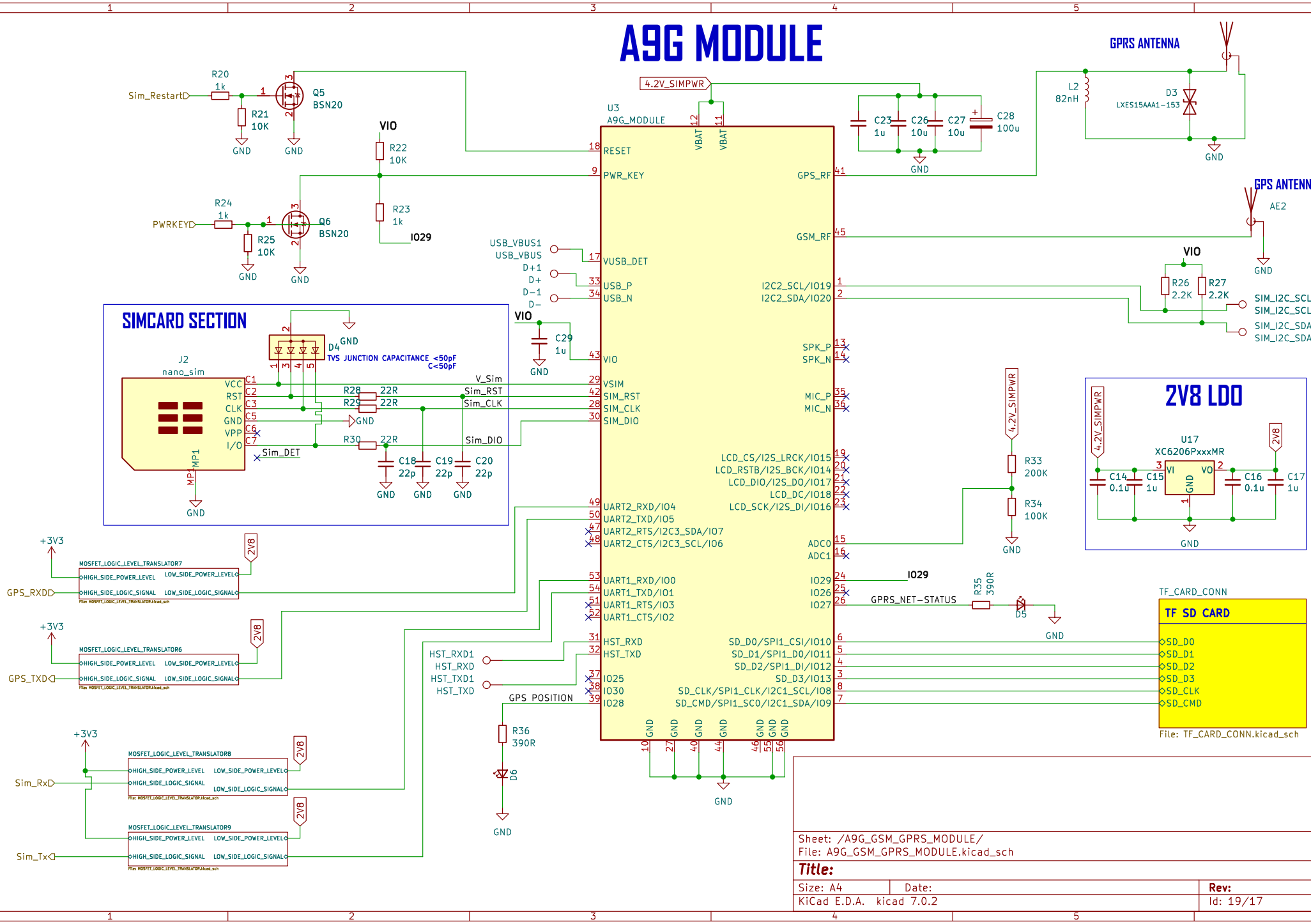
A9G MODULE
GPRS ANTENNA
GPS ANTENNA
SIMCARD SECTION
2V8 LDO
U3
A9G_MODULE
4.2V_SIMPWR
VBAT
RESET
PWR_KEY
VUSB_DET
USB_P
USB_N
VIO
VSIM
SIM_RST
SIM_CLK
SIM_DIO
UART2_RXD/IO4
UART2_TXD/IO5
UART2_RTS/I2C3_SDA/IO7
UART2_CTS/I2C3_SCL/IO6
UART1_RXD/IO0
UART1_TXD/IO1
UART1_RTS/IO3
UART1_CTS/IO2
HST_RXD
HST_TXD
IO25
IO30
IO28
GPS_RF
GSM_RF
I2C2_SCL/IO19
I2C2_SDA/IO20
SPK_P
SPK_N
MIC_P
MIC_N
LCD_CS/I2S_LRCK/IO15
LCD_RSTB/I2S_BCK/IO14
LCD_DIO/I2S_DO/IO17
LCD_DC/IO18
LCD_SCK/I2S_DI/IO16
ADC0
ADC1
IO29
IO26
IO27
SD_D0/SPI1_CSI/IO10
SD_D1/SPI1_D0/IO11
SD_D2/SPI1_DI/IO12
SD_D3/IO13
SD_CLK/SPI1_CLK/I2C1_SCL/IO8
SD_CMD/SPI1_SC0/I2C1_SDA/IO9
GND
Sim_Restart
R20 1k
R21 10K
Q5 BSN20
VIO
R22 10K
R23 1k
IO29
PWRKEY
R24 1k
R25 10K
Q6 BSN20
USB_VBUS1
USB_VBUS
D+1
D+
D-1
D-
C29 1u
C23 1u
C26 10u
C27 10u
C28 100u
L2 82nH
D3 LXES15AAA1-153
AE2
R26 2.2K
R27 2.2K
SIM_I2C_SCL1
SIM_I2C_SCL
SIM_I2C_SDA1
SIM_I2C_SDA
J2
nano_sim
VCC
RST
CLK
GND
VPP
I/O
MP1
D4
TVS JUNCTION CAPACITANCE <50pF
C<50pF
V_Sim
Sim_RST
Sim_CLK
Sim_DIO
Sim_DET
R28 22R
R29 22R
R30 22R
C18 22p
C19 22p
C20 22p
R33 200K
R34 100K
U17
XC6206PxxxMR
C14 0.1u
C15 1u
C16 0.1u
C17 1u
2V8
+3V3
MOSFET_LOGIC_LEVEL_TRANSLATOR7
MOSFET_LOGIC_LEVEL_TRANSLATOR6
MOSFET_LOGIC_LEVEL_TRANSLATOR8
MOSFET_LOGIC_LEVEL_TRANSLATOR9
HIGH_SIDE_POWER_LEVEL
HIGH_SIDE_LOGIC_SIGNAL
LOW_SIDE_POWER_LEVEL
LOW_SIDE_LOGIC_SIGNAL
GPS_RXD
GPS_TXD
Sim_Rx
Sim_Tx
HST_RXD1
HST_RXD
HST_TXD1
HST_TXD
GPS POSITION
R36 390R
D6
GPRS_NET-STATUS
R35 390R
D5
TF_CARD_CONN
TF SD CARD
SD_D0
SD_D1
SD_D2
SD_D3
SD_CLK
SD_CMD
File: TF_CARD_CONN.kicad_sch
Sheet: /A9G_GSM_GPRS_MODULE/
File: A9G_GSM_GPRS_MODULE.kicad_sch
Title:
Size: A4
Date:
Rev:
KiCad E.D.A. kicad 7.0.2
Id: 19/17

RS485 MAX485E

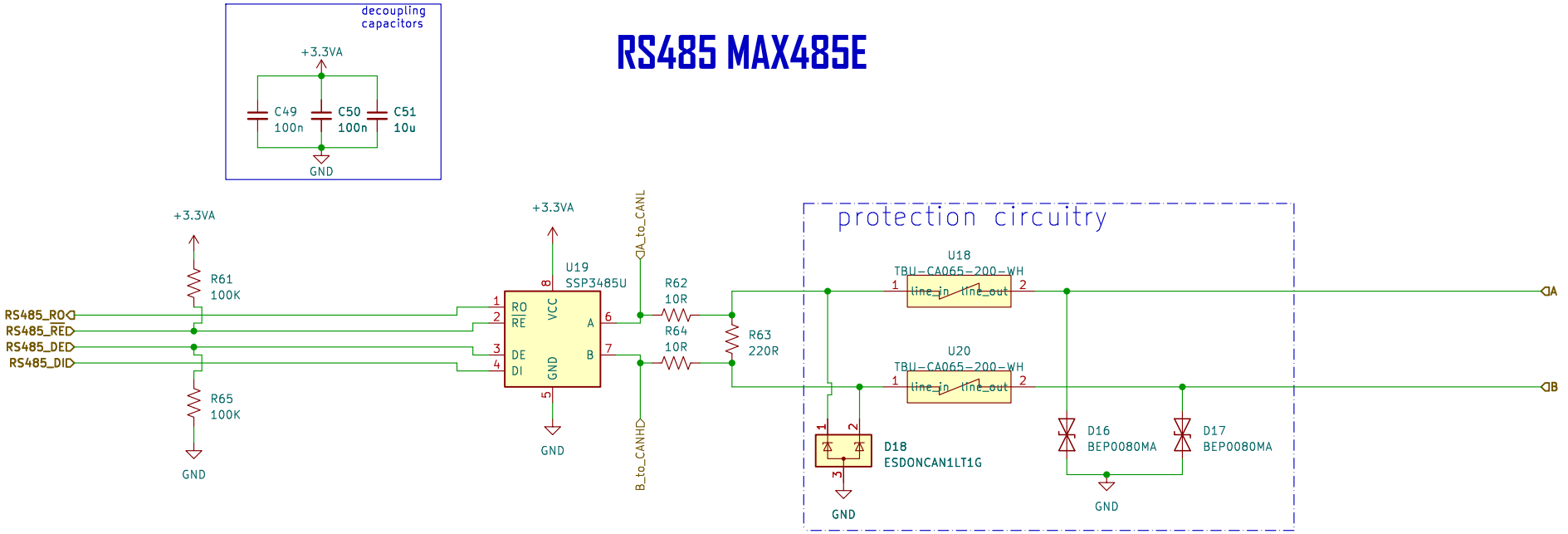

BIM BOARD
Designed By: Robert Mutura
Reviewed by: Timothy Kyalo

GEVITON

Sheet: /RS485_MAX487/
File: RS485_MAX485.kicad_sch

Title: BIM BOARD

Size: A4	Date: 2023-12-06	**Rev: REV 2.0.0**
KiCad E.D.A. kicad 7.0.2		Id: 19/17

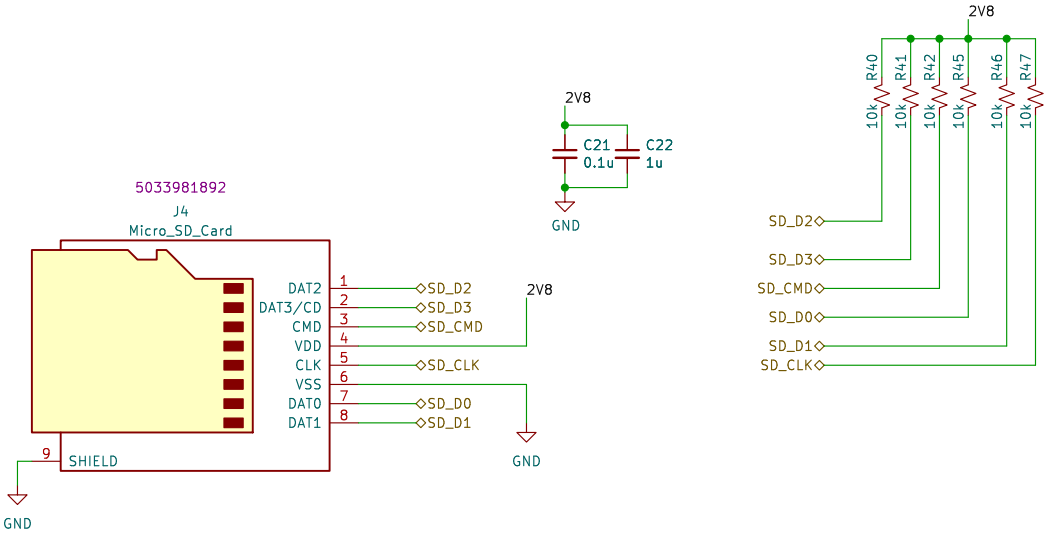

Sheet: /A9G_GSM_GPRS_MODULE/TF_CARD_CONN/
File: TF_CARD_CONN.kicad_sch

Title:

Size: A4	Date:	**Rev:**
KiCad E.D.A. kicad 7.0.2		Id: 20/17

BI-DIRECTIONAL LEVEL TRANSLATOR MOSFET - IMPLEMENTATION

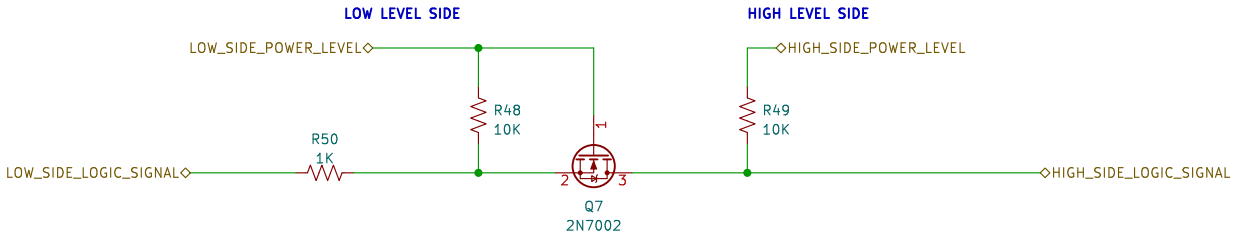

BIM BOARD
Designed By: Robert Mutura
Reviewed by: Timothy Kyalo

GEVITON

Sheet: /A9G_GSM_GPRS_MODULE/MOSFET_LOGIC_LEVEL_TRANSLATOR7/
File: MOSFET_LOGIC_LEVEL_TRANSLATOR.kicad_sch

Title: BIM BOARD

Size: A4	Date: 2023-12-06	**Rev: REV 2.0.0**
KiCad E.D.A. kicad 7.0.2		Id: 21/17

BI-DIRECTIONAL LEVEL TRANSLATOR MOSFET - IMPLEMENTATION

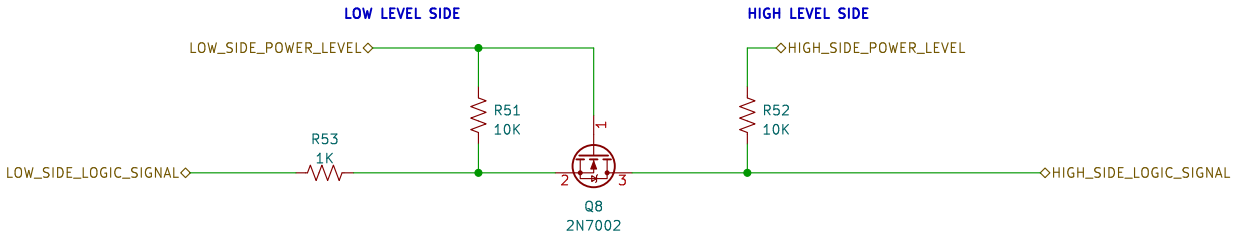

BIM BOARD
Designed By: Robert Mutura
Reviewed by: Timothy Kyalo

GEVITON

Sheet: /A9G_GSM_GPRS_MODULE/MOSFET_LOGIC_LEVEL_TRANSLATOR8/
File: MOSFET_LOGIC_LEVEL_TRANSLATOR.kicad_sch

Title: BIM BOARD

Size: A4	Date: 2023-12-06	**Rev: REV 2.0.0**
KiCad E.D.A. kicad 7.0.2		Id: 22/17

BI-DIRECTIONAL LEVEL TRANSLATOR MOSFET - IMPLEMENTATION

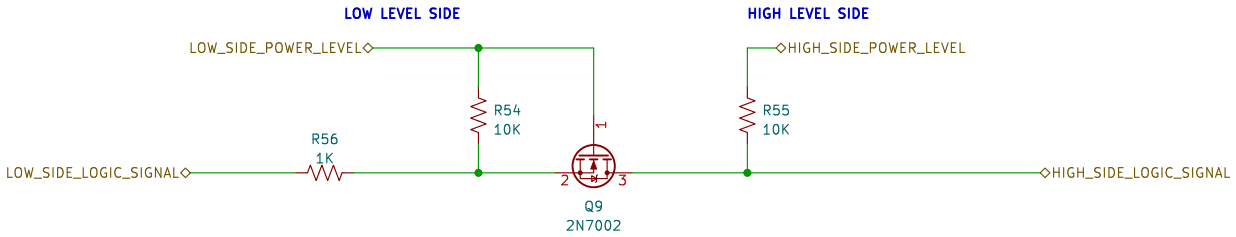

BIM BOARD
Designed By: Robert Mutura
Reviewed by: Timothy Kyalo

GEVITON

Sheet: /A9G_GSM_GPRS_MODULE/MOSFET_LOGIC_LEVEL_TRANSLATOR9/
File: MOSFET_LOGIC_LEVEL_TRANSLATOR.kicad_sch

Title: BIM BOARD

Size: A4	Date: 2023-12-06	**Rev: REV 2.0.0**
KiCad E.D.A. kicad 7.0.2		Id: 23/17