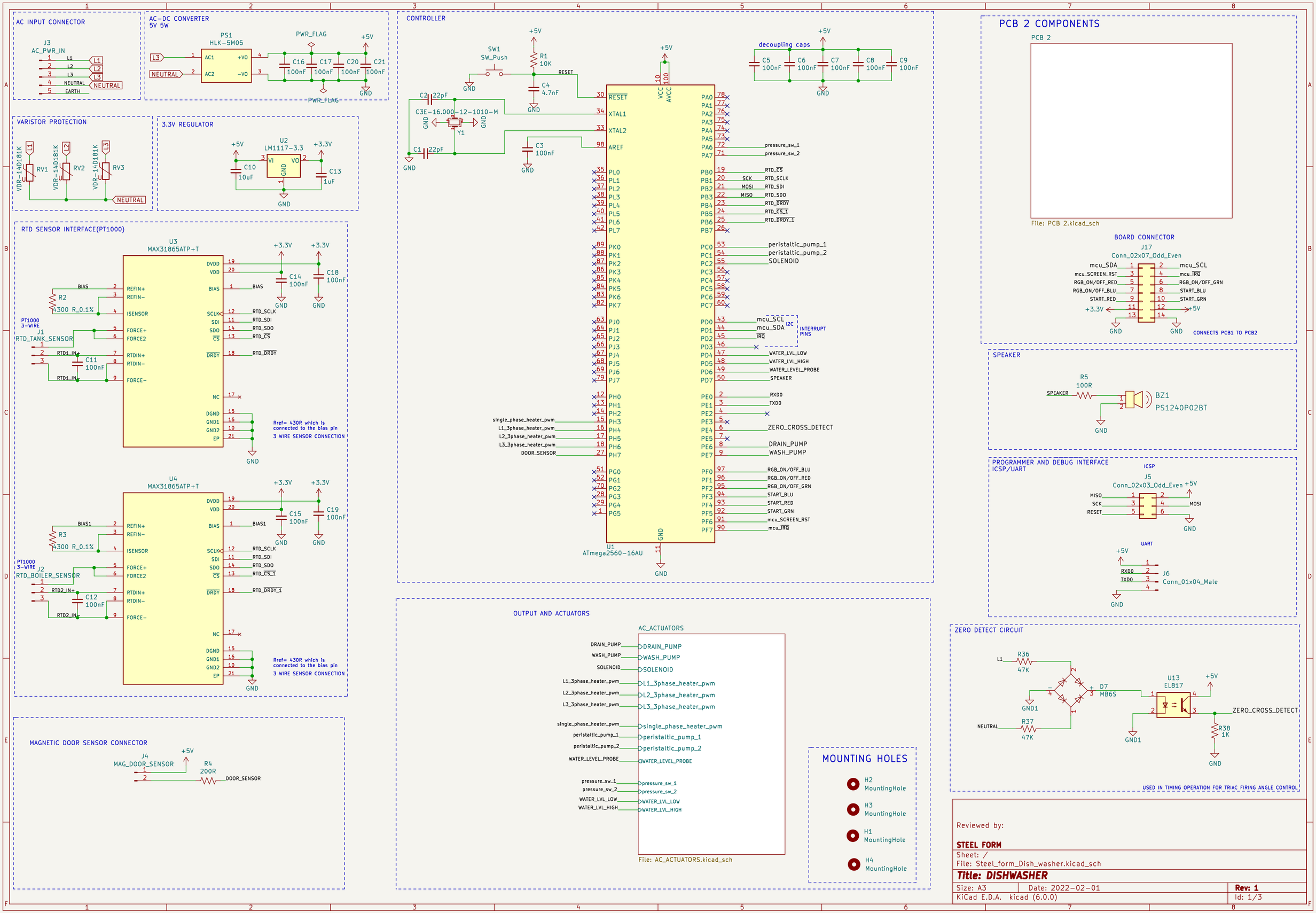
AC INPUT CONNECTOR
J3
AC_PWR_IN
L1
L2
L3
NEUTRAL
EARTH
AC-DC CONVERTER
5V 5W
PS1
HLK-5M05
AC1
AC2
+VO
-VO
PWR_FLAG
C16 100nF
C17 100nF
C20 100nF
C21 100nF
+5V
GND
VARISTOR PROTECTION
RV1
RV2
RV3
VDR-140181K
3.3V REGULATOR
U2
LM1117-3.3
VI
VO
GND
C10 10uF
C13 1uF
+3.3V
RTD SENSOR INTERFACE(PT1000)
U3
MAX31865ATP+T
DVDD
VDD
BIAS
REFIN+
REFIN-
ISENSOR
FORCE+
FORCE2
RTDIN+
RTDIN-
FORCE-
SCLK
SDI
SDO
CS
DRDY
NC
DGND
GND1
GND2
EP
R2
4300 R_0.1%
C14 100nF
C18 100nF
C11 100nF
PT1000
3-WIRE
J1
RTD_TANK_SENSOR
RTD1_IN+
RTD1_IN-
RTD_SCLK
RTD_SDI
RTD_SDO
RTD_CS
RTD_DRDY
Rref= 430R which is connected to the bias pin
3 WIRE SENSOR CONNECTION
U4
MAX31865ATP+T
R3
4300 R_0.1%
C15 100nF
C19 100nF
J2
RTD_BOILER_SENSOR
RTD2_IN+
RTD2_IN-
C12 100nF
BIAS1
RTD_CS_1
RTD_DRDY_1
MAGNETIC DOOR SENSOR CONNECTOR
J4
MAG_DOOR_SENSOR
R4
200R
DOOR_SENSOR
CONTROLLER
SW1
SW_Push
R1
10K
C4
4.7nF
RESET
C2 22pF
C1 22pF
C3E-16.000-12-1010-M
Y1
C3
100nF
U1
ATmega2560-16AU
VCC
AVCC
XTAL1
XTAL2
AREF
PL0
PL1
PL2
PL3
PL4
PL5
PL6
PL7
PK0
PK1
PK2
PK3
PK4
PK5
PK6
PK7
PJ0
PJ1
PJ2
PJ3
PJ4
PJ5
PJ6
PJ7
PH0
PH1
PH2
PH3
PH4
PH5
PH6
PH7
PG0
PG1
PG2
PG3
PG4
PG5
PA0
PA1
PA2
PA3
PA4
PA5
PA6
PA7
PB0
PB1
PB2
PB3
PB4
PB5
PB6
PB7
PC0
PC1
PC2
PC3
PC4
PC5
PC6
PC7
PD0
PD1
PD2
PD3
PD4
PD5
PD6
PD7
PE0
PE1
PE2
PE3
PE4
PE5
PE6
PE7
PF0
PF1
PF2
PF3
PF4
PF5
PF6
PF7
decoupling caps
C5 100nF
C6 100nF
C7 100nF
C8 100nF
C9 100nF
pressure_sw_1
pressure_sw_2
SCK
MOSI
MISO
RTD_CS
RTD_SCLK
RTD_SDI
RTD_SDO
RTD_DRDY
RTD_CS_1
RTD_DRDY_1
peristaltic_pump_1
peristaltic_pump_2
SOLENOID
mcu_SCL
mcu_SDA
IRQ
I2C
INTERRUPT PINS
WATER_LVL_LOW
WATER_LVL_HIGH
WATER_LEVEL_PROBE
SPEAKER
RXD0
TXD0
ZERO_CROSS_DETECT
DRAIN_PUMP
WASH_PUMP
RGB_ON/OFF_BLU
RGB_ON/OFF_RED
RGB_ON/OFF_GRN
START_BLU
START_RED
START_GRN
mcu_SCREEN_RST
mcu_IRQ
single_phase_heater_pwm
L1_3phase_heater_pwm
L2_3phase_heater_pwm
L3_3phase_heater_pwm
OUTPUT AND ACTUATORS
AC_ACTUATORS
File: AC_ACTUATORS.kicad_sch
MOUNTING HOLES
H2 MountingHole
H3 MountingHole
H1 MountingHole
H4 MountingHole
PCB 2 COMPONENTS
PCB 2
File: PCB 2.kicad_sch
BOARD CONNECTOR
J17
Conn_02x07_Odd_Even
CONNECTS PCB1 TO PCB2
SPEAKER
R5
100R
BZ1
PS1240P02BT
PROGRAMMER AND DEBUG INTERFACE
ICSP/UART
ICSP
J5
Conn_02x03_Odd_Even
MISO
SCK
RESET
MOSI
UART
J6
Conn_01x04_Male
ZERO DETECT CIRCUIT
R36
47K
R37
47K
D7
MB6S
U13
EL817
R38
1K
GND1
NEUTRAL
ZERO_CROSS_DETECT
USED IN TIMING OPERATION FOR TRIAC FIRING ANGLE CONTROL
Reviewed by:
STEEL FORM
Sheet: /
File: Steel_form_Dish_washer.kicad_sch
Title: DISHWASHER
Size: A3
Date: 2022-02-01
Rev: 1
KiCad E.D.A. kicad (6.0.0)
Id: 1/3

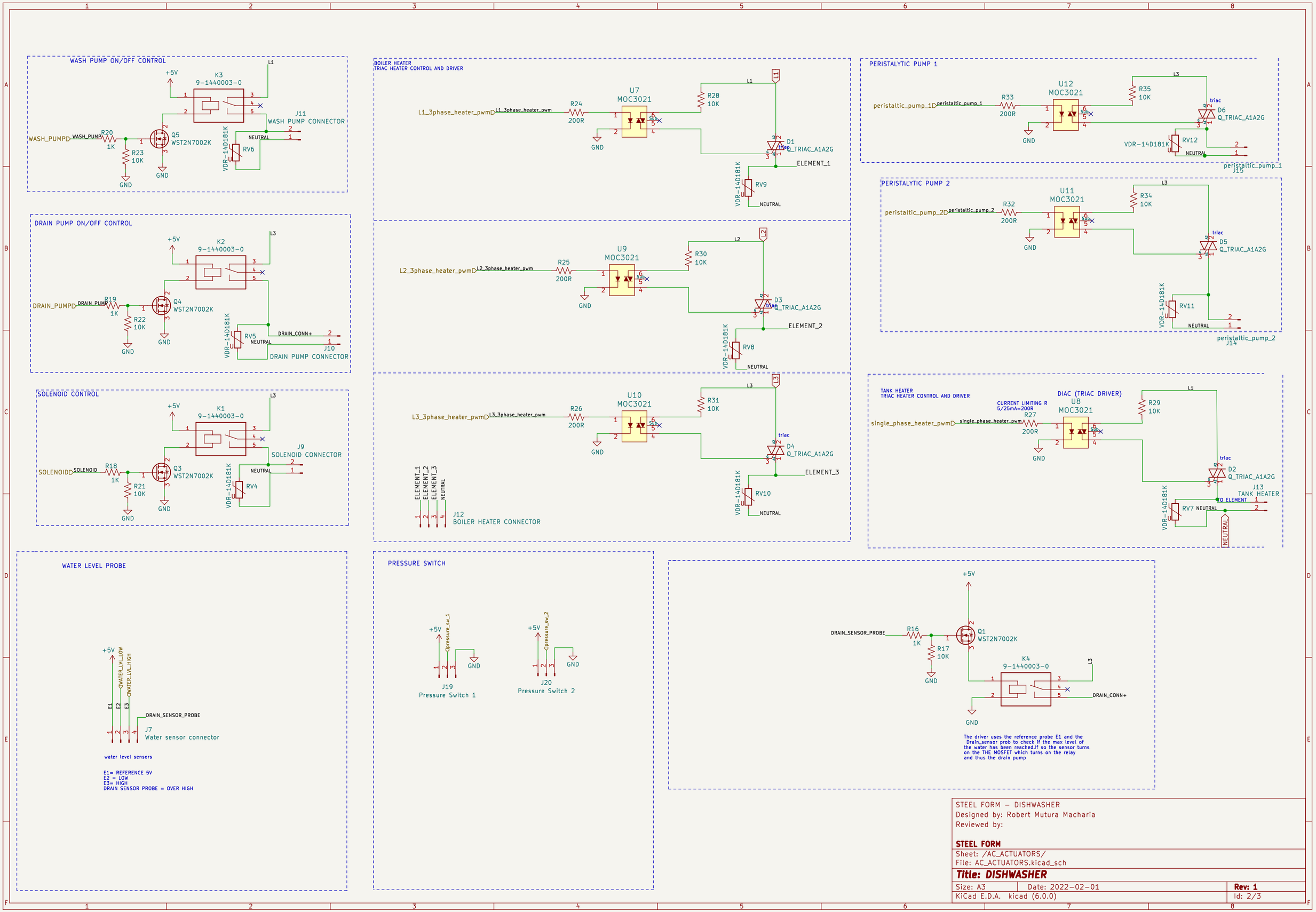

STEEL FORM – DISHWASHER
Designed by: Robert Mutura Macharia
Reviewed by:

STEEL FORM
Sheet: /AC_ACTUATORS/
File: AC_ACTUATORS.kicad_sch

Title: DISHWASHER

Size: A3	Date: 2022-02-01	**Rev: 1**
KiCad E.D.A. kicad (6.0.0)		Id: 2/3

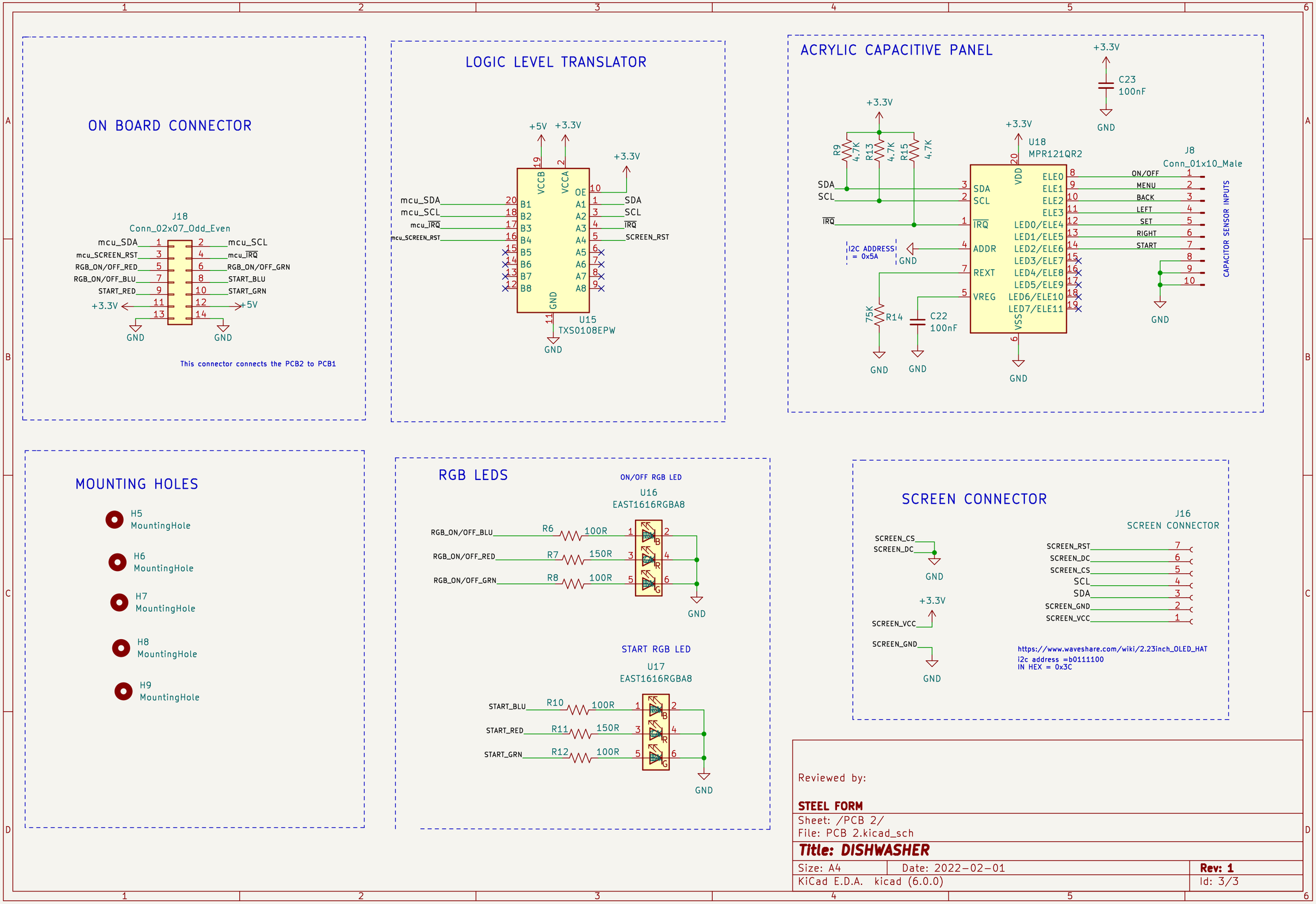

Reviewed by:

STEEL FORM

Sheet: /PCB 2/
File: PCB 2.kicad_sch

Title: DISHWASHER

Size: A4	Date: 2022-02-01	**Rev: 1**
KiCad E.D.A. kicad (6.0.0)		Id: 3/3