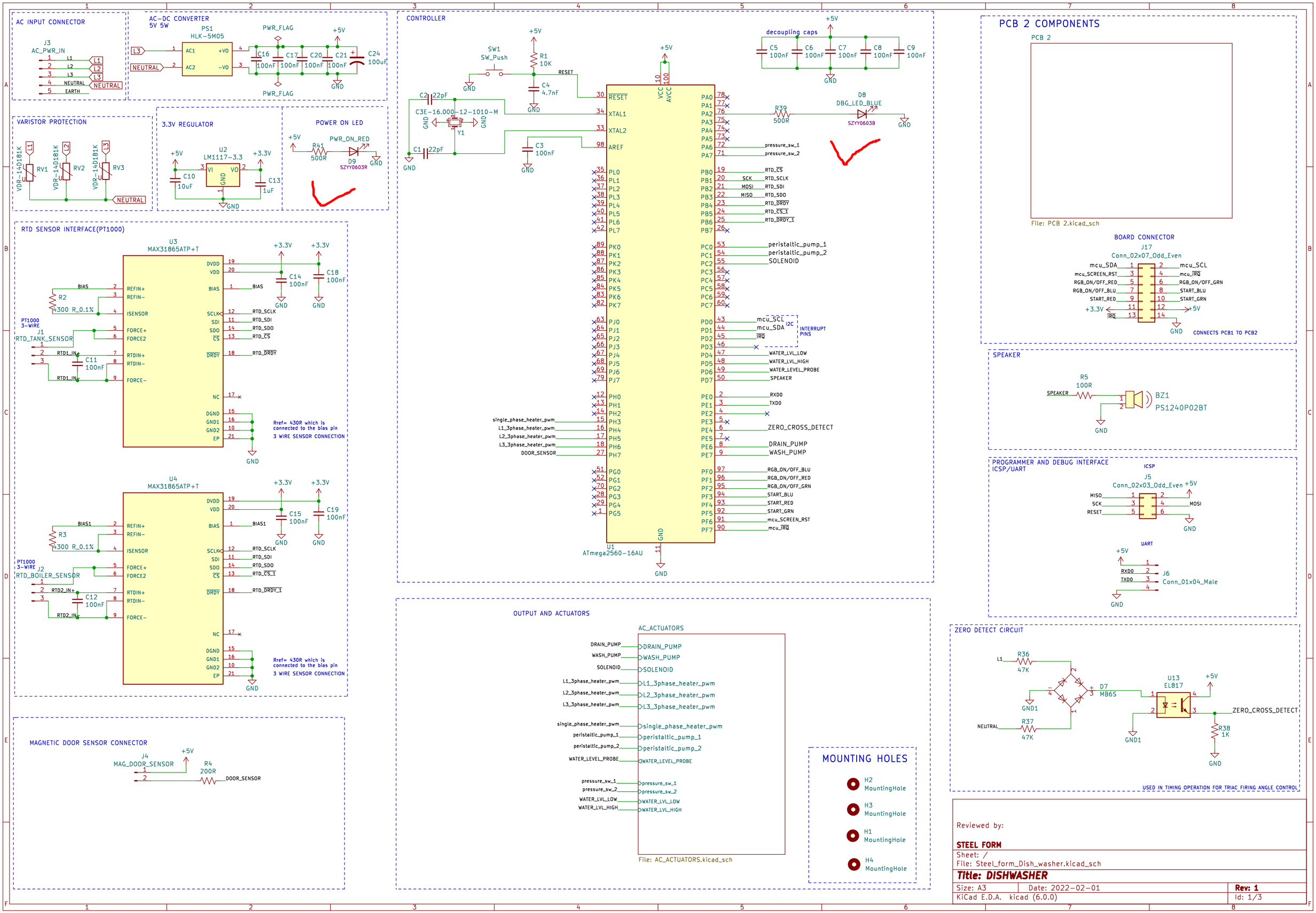
AC INPUT CONNECTOR
J3
AC_PWR_IN
L1
L2
L3
NEUTRAL
EARTH
AC-DC CONVERTER
5V 5W
PS1
HLK-5M05
AC1
AC2
+VO
-VO
PWR_FLAG
+5V
C16 100nF
C17 100nF
C20 100nF
C21 100nF
C24 100uF
GND
VARISTOR PROTECTION
VDR-14D181K
RV1
RV2
RV3
3.3V REGULATOR
U2
LM1117-3.3
VI
VO
GND
+3.3V
C10 10uF
C13 1uF
POWER ON LED
R41 500R
PWR_ON_RED
D9
SZYY0603R
RTD SENSOR INTERFACE(PT1000)
U3
MAX31865ATP+T
DVDD
VDD
BIAS
REFIN+
REFIN-
ISENSOR
FORCE+
FORCE2
RTDIN+
RTDIN-
FORCE-
SCLK
SDI
SDO
CS
DRDY
NC
DGND
GND1
GND2
EP
R2 4300 R_0.1%
C14 100nF
C18 100nF
PT1000 3-WIRE
J1
RTD_TANK_SENSOR
RTD1_IN+
RTD1_IN-
C11 100nF
RTD_SCLK
RTD_SDI
RTD_SDO
RTD_CS
RTD_DRDY
Rref= 430R which is connected to the bias pin
3 WIRE SENSOR CONNECTION
U4
MAX31865ATP+T
R3 4300 R_0.1%
C15 100nF
C19 100nF
PT1000 3-WIRE
J2
RTD_BOILER_SENSOR
RTD2_IN+
RTD2_IN-
C12 100nF
BIAS1
RTD_CS_1
RTD_DRDY_1
MAGNETIC DOOR SENSOR CONNECTOR
J4
MAG_DOOR_SENSOR
R4 200R
DOOR_SENSOR
CONTROLLER
SW1
SW_Push
R1 10K
C4 4.7nF
RESET
C2 22pF
C1 22pF
C3E-16.000-12-1010-M
Y1
C3 100nF
VCC
AVCC
XTAL1
XTAL2
AREF
U1
ATmega2560-16AU
decoupling caps
C5 100nF
C6 100nF
C7 100nF
C8 100nF
C9 100nF
R39 500R
D8
DBG_LED_BLUE
SZYY0603B
pressure_sw_1
pressure_sw_2
RTD_CS
RTD_SCLK
RTD_SDI
RTD_SDO
RTD_DRDY
RTD_CS_1
RTD_DRDY_1
SCK
MOSI
MISO
peristaltic_pump_1
peristaltic_pump_2
SOLENOID
mcu_SCL
mcu_SDA
IRQ
I2C
INTERRUPT PINS
WATER_LVL_LOW
WATER_LVL_HIGH
WATER_LEVEL_PROBE
SPEAKER
RXD0
TXD0
ZERO_CROSS_DETECT
DRAIN_PUMP
WASH_PUMP
RGB_ON/OFF_BLU
RGB_ON/OFF_RED
RGB_ON/OFF_GRN
START_BLU
START_RED
START_GRN
mcu_SCREEN_RST
mcu_IRQ
single_phase_heater_pwm
L1_3phase_heater_pwm
L2_3phase_heater_pwm
L3_3phase_heater_pwm
DOOR_SENSOR
OUTPUT AND ACTUATORS
AC_ACTUATORS
File: AC_ACTUATORS.kicad_sch
MOUNTING HOLES
H2 MountingHole
H3 MountingHole
H1 MountingHole
H4 MountingHole
PCB 2 COMPONENTS
PCB 2
File: PCB 2.kicad_sch
BOARD CONNECTOR
J17
Conn_02x07_Odd_Even
mcu_SDA
mcu_SCREEN_RST
RGB_ON/OFF_RED
RGB_ON/OFF_BLU
START_RED
+3.3V
IRQ
mcu_SCL
mcu_IRQ
RGB_ON/OFF_GRN
START_BLU
START_GRN
+5V
CONNECTS PCB1 TO PCB2
SPEAKER
R5 100R
BZ1
PS1240P02BT
PROGRAMMER AND DEBUG INTERFACE
ICSP/UART
ICSP
J5
Conn_02x03_Odd_Even
MISO
SCK
RESET
MOSI
UART
J6
Conn_01x04_Male
RXD0
TXD0
ZERO DETECT CIRCUIT
L1
R36 47K
D7 MB6S
U13 EL817
GND1
NEUTRAL
R37 47K
R38 1K
ZERO_CROSS_DETECT
USED IN TIMING OPERATION FOR TRIAC FIRING ANGLE CONTROL
Reviewed by:
STEEL FORM
Sheet: /
File: Steel_form_Dish_washer.kicad_sch
Title: DISHWASHER
Size: A3
Date: 2022-02-01
Rev: 1
KiCad E.D.A. kicad (6.0.0)
Id: 1/3

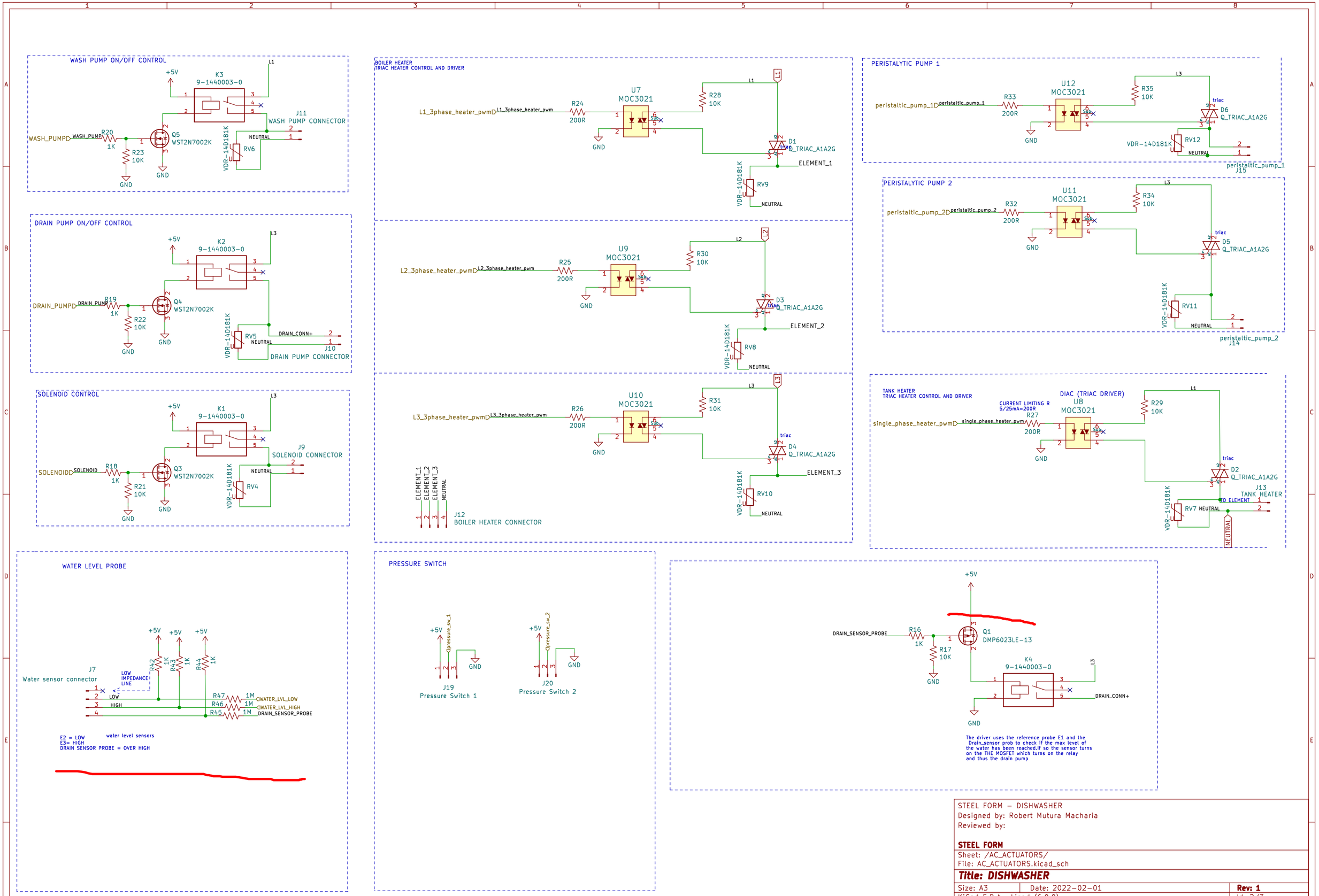


STEEL FORM – DISHWASHER
Designed by: Robert Mutura Macharia
Reviewed by:

**STEEL FORM**
Sheet: /AC_ACTUATORS/
File: AC_ACTUATORS.kicad_sch

**Title: DISHWASHER**

| | | |
|---|---|---|
| Size: A3 | Date: 2022-02-01 | **Rev: 1** |
| KiCad E.D.A. kicad (6.0.0) | | Id: 2/3 |

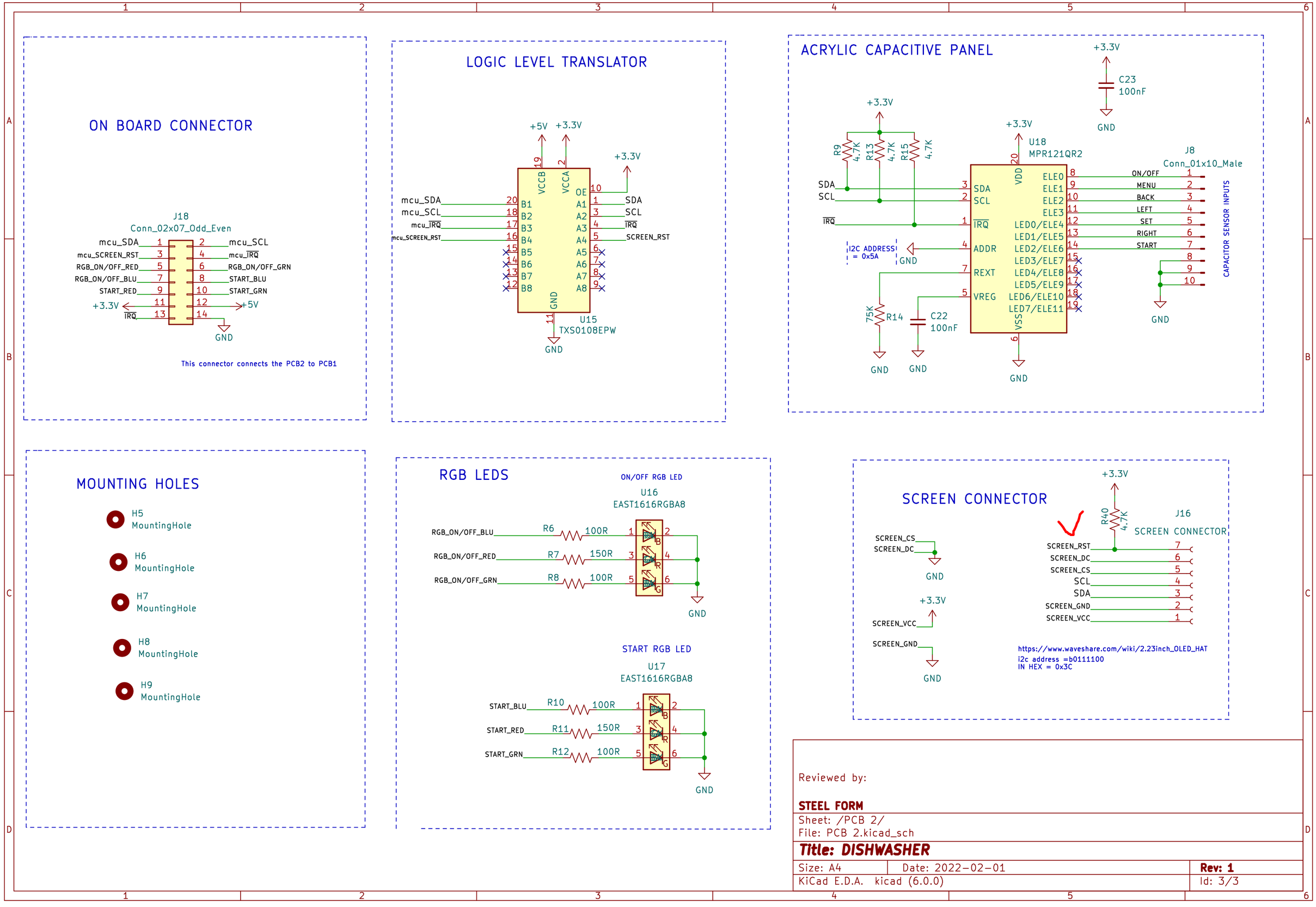
ON BOARD CONNECTOR
J18
Conn_02x07_Odd_Even
mcu_SDA
mcu_SCL
mcu_SCREEN_RST
mcu_IRQ
RGB_ON/OFF_RED
RGB_ON/OFF_GRN
RGB_ON/OFF_BLU
START_BLU
START_RED
START_GRN
+3.3V
+5V
IRQ
GND
This connector connects the PCB2 to PCB1
LOGIC LEVEL TRANSLATOR
+5V
+3.3V
VCCB
VCCA
OE
B1
B2
B3
B4
B5
B6
B7
B8
A1
A2
A3
A4
A5
A6
A7
A8
SDA
SCL
IRQ
SCREEN_RST
U15
TXS0108EPW
ACRYLIC CAPACITIVE PANEL
C23
100nF
R9
R13
R15
4.7K
U18
MPR121QR2
VDD
SDA
SCL
IRQ
ADDR
REXT
VREG
VSS
ELE0
ELE1
ELE2
ELE3
LED0/ELE4
LED1/ELE5
LED2/ELE6
LED3/ELE7
LED4/ELE8
LED5/ELE9
LED6/ELE10
LED7/ELE11
I2C ADDRESS = 0x5A
R14
75K
C22
100nF
J8
Conn_01x10_Male
ON/OFF
MENU
BACK
LEFT
SET
RIGHT
START
CAPACITOR SENSOR INPUTS
MOUNTING HOLES
H5
MountingHole
H6
MountingHole
H7
MountingHole
H8
MountingHole
H9
MountingHole
RGB LEDS
ON/OFF RGB LED
U16
EAST1616RGBA8
RGB_ON/OFF_BLU
RGB_ON/OFF_RED
RGB_ON/OFF_GRN
R6
R7
R8
100R
150R
START RGB LED
U17
EAST1616RGBA8
START_BLU
START_RED
START_GRN
R10
R11
R12
SCREEN CONNECTOR
R40
4.7K
J16
SCREEN CONNECTOR
SCREEN_CS
SCREEN_DC
SCREEN_VCC
SCREEN_GND
SCREEN_RST
SCL
SDA
https://www.waveshare.com/wiki/2.23inch_OLED_HAT
i2c address =b0111100
IN HEX = 0x3C
Reviewed by:
STEEL FORM
Sheet: /PCB 2/
File: PCB 2.kicad_sch
Title: DISHWASHER
Size: A4
Date: 2022-02-01
Rev: 1
KiCad E.D.A. kicad (6.0.0)
Id: 3/3