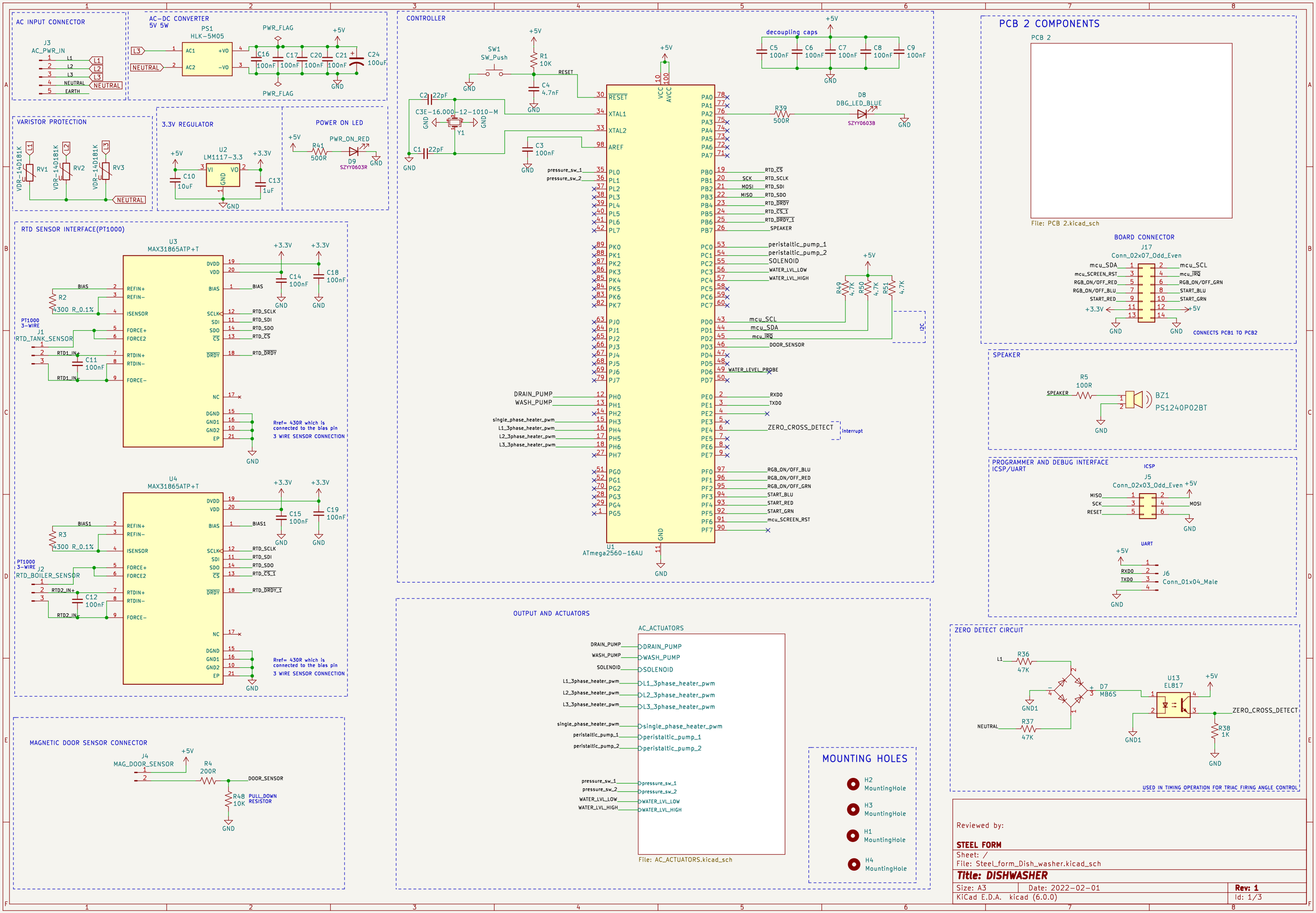
AC INPUT CONNECTOR
J3
AC_PWR_IN
L1
L2
L3
NEUTRAL
EARTH
AC-DC CONVERTER
5V 5W
PS1
HLK-5M05
AC1
AC2
+VO
-VO
PWR_FLAG
C16 100nF
C17 100nF
C20 100nF
C21 100nF
C24 100uF
+5V
GND
VARISTOR PROTECTION
RV1
RV2
RV3
VDR-140181K
3.3V REGULATOR
U2
LM1117-3.3
VI
VO
GND
C10 10uF
C13 1uF
+3.3V
POWER ON LED
R41 500R
PWR_ON_RED
D9
SZYY0603R
RTD SENSOR INTERFACE(PT1000)
U3
MAX31865ATP+T
REFIN+
REFIN-
ISENSOR
FORCE+
FORCE2
RTDIN+
RTDIN-
FORCE-
DVDD
VDD
BIAS
SCLK
SDI
SDO
CS
DRDY
NC
DGND
GND1
GND2
EP
R2 4300 R_0.1%
PT1000 3-WIRE
J1
RTD_TANK_SENSOR
RTD1_IN+
RTD1_IN-
C11 100nF
C14 100nF
C18 100nF
RTD_SCLK
RTD_SDI
RTD_SDO
RTD_CS
RTD_DRDY
Rref= 430R which is connected to the bias pin
3 WIRE SENSOR CONNECTION
U4
MAX31865ATP+T
R3 4300 R_0.1%
PT1000 3-WIRE
J2
RTD_BOILER_SENSOR
RTD2_IN+
RTD2_IN-
C12 100nF
C15 100nF
C19 100nF
BIAS1
RTD_CS_1
RTD_DRDY_1
MAGNETIC DOOR SENSOR CONNECTOR
J4
MAG_DOOR_SENSOR
R4 200R
DOOR_SENSOR
R48 10K
PULL_DOWN RESISTOR
CONTROLLER
SW1
SW_Push
R1 10K
C4 4.7nF
RESET
C2 22pF
C1 22pF
C3E-16.000-12-1010-M
Y1
C3 100nF
XTAL1
XTAL2
AREF
VCC
AVCC
pressure_sw_1
pressure_sw_2
DRAIN_PUMP
WASH_PUMP
single_phase_heater_pwm
L1_3phase_heater_pwm
L2_3phase_heater_pwm
L3_3phase_heater_pwm
U1
ATmega2560-16AU
decoupling caps
C5 100nF
C6 100nF
C7 100nF
C8 100nF
C9 100nF
R39 500R
D8
DBG_LED_BLUE
SZYY0603B
SCK
MOSI
MISO
RTD_CS
RTD_SCLK
RTD_SDI
RTD_SDO
RTD_DRDY
RTD_CS_1
RTD_DRDY_1
SPEAKER
peristaltic_pump_1
peristaltic_pump_2
SOLENOID
WATER_LVL_LOW
WATER_LVL_HIGH
R49 4.7K
R50 4.7K
R51 4.7K
mcu_SCL
mcu_SDA
mcu_IRQ
DOOR_SENSOR
WATER_LEVEL_PROBE
RXD0
TXD0
ZERO_CROSS_DETECT
interrupt
RGB_ON/OFF_BLU
RGB_ON/OFF_RED
RGB_ON/OFF_GRN
START_BLU
START_RED
START_GRN
mcu_SCREEN_RST
I2C
OUTPUT AND ACTUATORS
AC_ACTUATORS
File: AC_ACTUATORS.kicad_sch
MOUNTING HOLES
H2 MountingHole
H3 MountingHole
H1 MountingHole
H4 MountingHole
PCB 2 COMPONENTS
PCB 2
File: PCB 2.kicad_sch
BOARD CONNECTOR
J17
Conn_02x07_Odd_Even
mcu_SCREEN_RST
RGB_ON/OFF_RED
RGB_ON/OFF_BLU
START_RED
RGB_ON/OFF_GRN
START_BLU
START_GRN
CONNECTS PCB1 TO PCB2
SPEAKER
R5 100R
BZ1
PS1240P02BT
PROGRAMMER AND DEBUG INTERFACE
ICSP/UART
ICSP
J5
Conn_02x03_Odd_Even
MISO
SCK
RESET
MOSI
UART
J6
Conn_01x04_Male
RXD0
TXD0
ZERO DETECT CIRCUIT
R36 47K
R37 47K
D7 MB6S
U13 EL817
R38 1K
GND1
NEUTRAL
USED IN TIMING OPERATION FOR TRIAC FIRING ANGLE CONTROL
Reviewed by:
STEEL FORM
Sheet: /
File: Steel_form_Dish_washer.kicad_sch
Title: DISHWASHER
Size: A3
Date: 2022-02-01
Rev: 1
KiCad E.D.A. kicad (6.0.0)
Id: 1/3

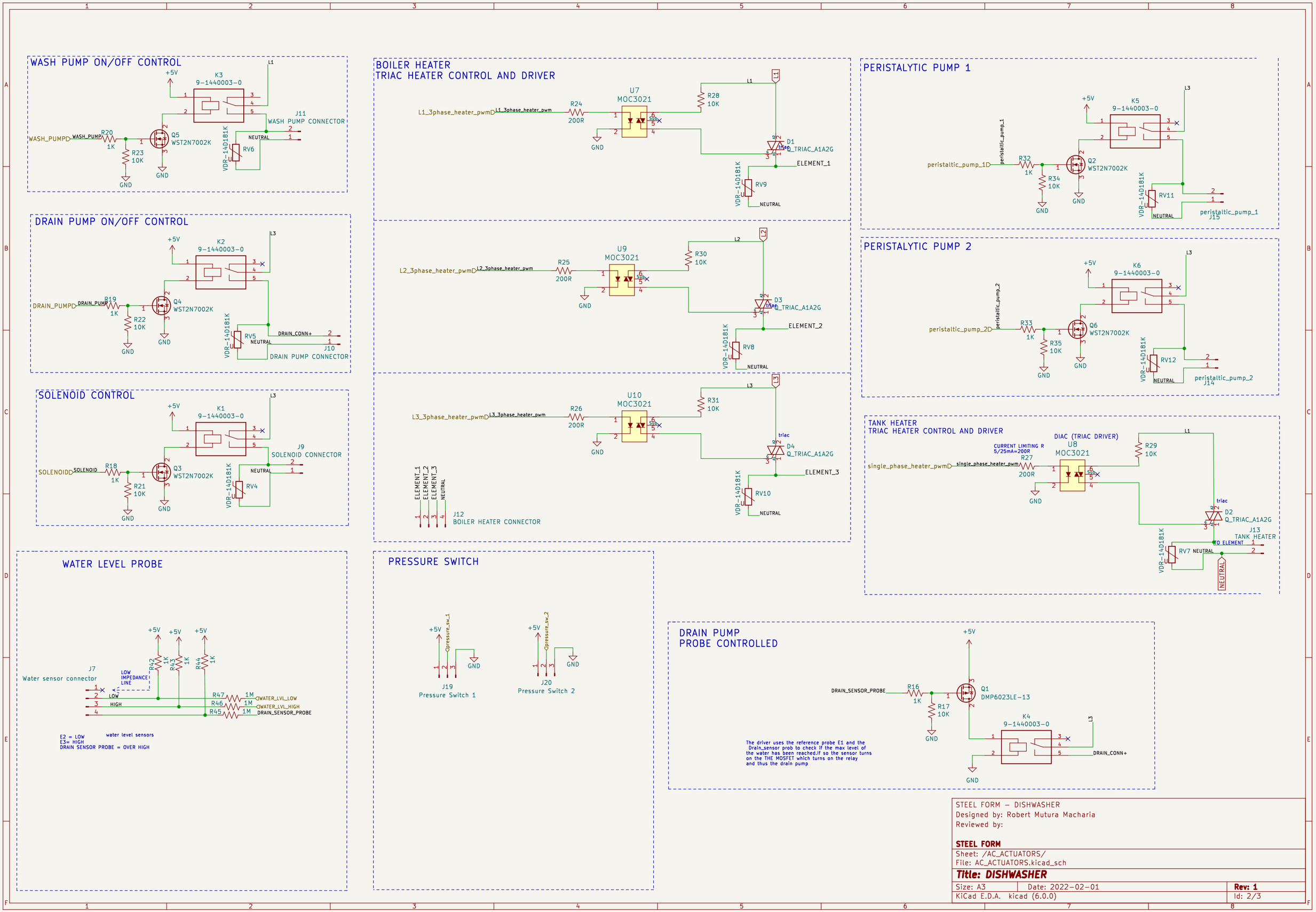
WASH PUMP ON/OFF CONTROL
K3
9-1440003-0
J11
WASH PUMP CONNECTOR
WASH_PUMP
R20
1K
R23
10K
Q5
WST2N7002K
VDR-14D181K
RV6
NEUTRAL
GND
DRAIN PUMP ON/OFF CONTROL
K2
9-1440003-0
DRAIN_PUMP
R19
1K
R22
10K
Q4
WST2N7002K
RV5
DRAIN_CONN+
J10
DRAIN PUMP CONNECTOR
SOLENOID CONTROL
K1
9-1440003-0
J9
SOLENOID CONNECTOR
SOLENOID
R18
1K
R21
10K
Q3
WST2N7002K
RV4
BOILER HEATER
TRIAC HEATER CONTROL AND DRIVER
U7
MOC3021
L1_3phase_heater_pwm
R24
200R
R28
10K
D1
Q_TRIAC_A1A2G
ELEMENT_1
RV9
U9
MOC3021
L2_3phase_heater_pwm
R25
200R
R30
10K
D3
Q_TRIAC_A1A2G
ELEMENT_2
RV8
U10
MOC3021
L3_3phase_heater_pwm
R26
200R
R31
10K
D4
Q_TRIAC_A1A2G
ELEMENT_3
RV10
ELEMENT_1
ELEMENT_2
ELEMENT_3
NEUTRAL
J12
BOILER HEATER CONNECTOR
PERISTALYTIC PUMP 1
K5
9-1440003-0
peristaltic_pump_1
R32
1K
R34
10K
Q2
WST2N7002K
RV11
J15
PERISTALYTIC PUMP 2
K6
9-1440003-0
peristaltic_pump_2
R33
1K
R35
10K
Q6
WST2N7002K
RV12
J14
TANK HEATER
TRIAC HEATER CONTROL AND DRIVER
DIAC (TRIAC DRIVER)
U8
MOC3021
CURRENT LIMITING R
5/25mA=200R
single_phase_heater_pwm
R27
200R
R29
10K
D2
Q_TRIAC_A1A2G
J13
TANK HEATER
TO ELEMENT
RV7
WATER LEVEL PROBE
J7
Water sensor connector
LOW
IMPEDANCE
LINE
R42
1K
R43
1K
R44
1K
R47
1M
R46
1M
R45
1M
WATER_LVL_LOW
WATER_LVL_HIGH
DRAIN_SENSOR_PROBE
E2 = LOW
E3= HIGH
DRAIN SENSOR PROBE = OVER HIGH
water level sensors
PRESSURE SWITCH
pressure_sw_1
pressure_sw_2
J19
Pressure Switch 1
J20
Pressure Switch 2
DRAIN PUMP
PROBE CONTROLLED
DRAIN_SENSOR_PROBE
R16
1K
R17
10K
Q1
DMP6023LE-13
K4
9-1440003-0
DRAIN_CONN+
The driver uses the reference probe E1 and the
Drain_sensor prob to check If the max level of
the water has been reached.If so the sensor turns
on the THE MOSFET which turns on the relay
and thus the drain pump
STEEL FORM – DISHWASHER
Designed by: Robert Mutura Macharia
Reviewed by:
STEEL FORM
Sheet: /AC_ACTUATORS/
File: AC_ACTUATORS.kicad_sch
Title: DISHWASHER
Size: A3
Date: 2022-02-01
Rev: 1
KiCad E.D.A. kicad (6.0.0)
Id: 2/3

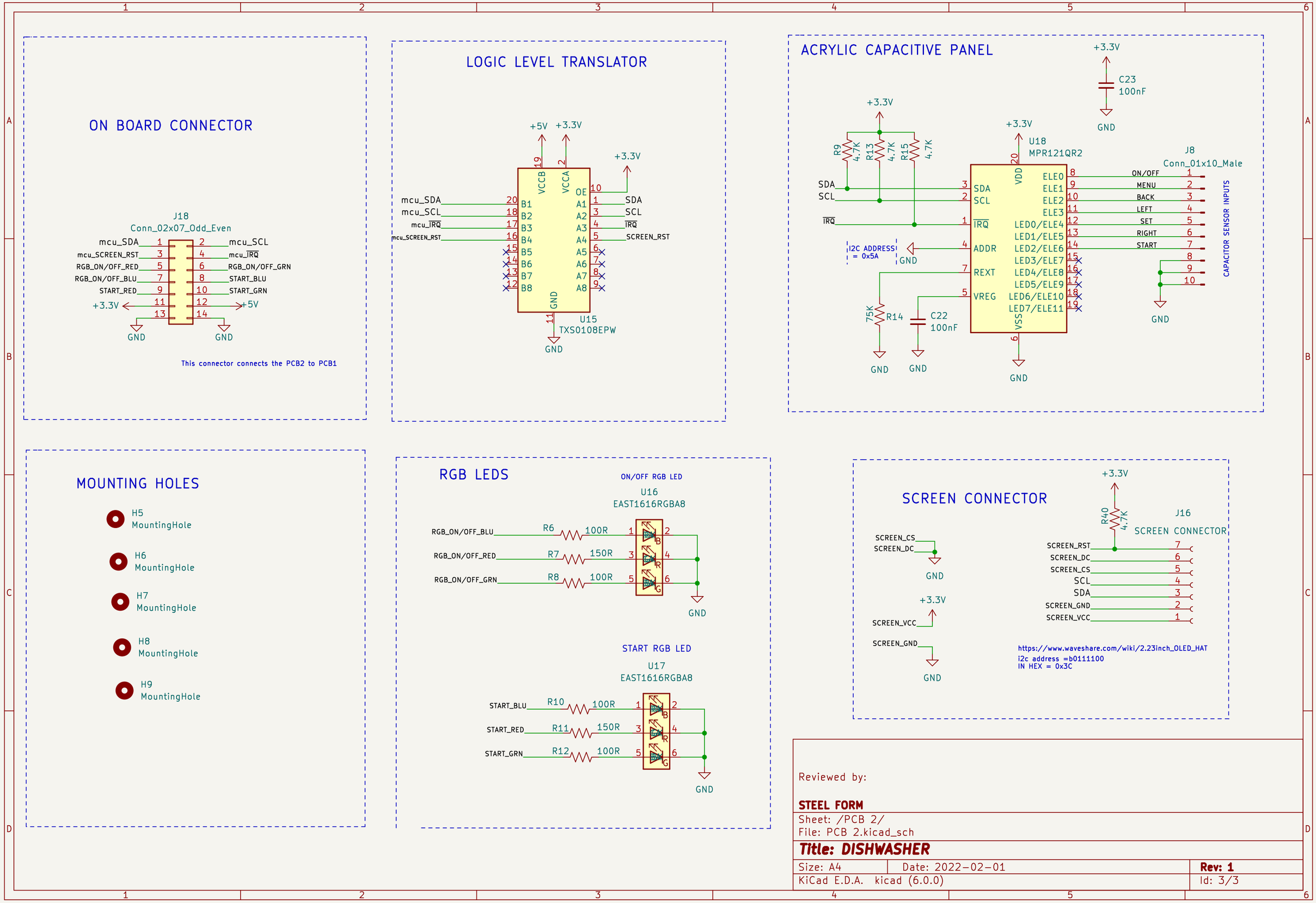
ON BOARD CONNECTOR
J18
Conn_02x07_Odd_Even
mcu_SDA
mcu_SCL
mcu_SCREEN_RST
mcu_IRQ
RGB_ON/OFF_RED
RGB_ON/OFF_GRN
RGB_ON/OFF_BLU
START_BLU
START_RED
START_GRN
+3.3V
+5V
GND
This connector connects the PCB2 to PCB1
LOGIC LEVEL TRANSLATOR
+5V
+3.3V
VCCB
VCCA
OE
GND
B1
B2
B3
B4
B5
B6
B7
B8
A1
A2
A3
A4
A5
A6
A7
A8
SDA
SCL
IRQ
SCREEN_RST
U15
TXS0108EPW
ACRYLIC CAPACITIVE PANEL
C23
100nF
R9
4.7K
R13
R15
U18
MPR121QR2
VDD
SDA
SCL
IRQ
ADDR
REXT
VREG
VSS
ELE0
ELE1
ELE2
ELE3
LED0/ELE4
LED1/ELE5
LED2/ELE6
LED3/ELE7
LED4/ELE8
LED5/ELE9
LED6/ELE10
LED7/ELE11
I2C ADDRESS = 0x5A
R14
75K
C22
100nF
J8
Conn_01x10_Male
ON/OFF
MENU
BACK
LEFT
SET
RIGHT
START
CAPACITOR SENSOR INPUTS
MOUNTING HOLES
H5
MountingHole
H6
MountingHole
H7
MountingHole
H8
MountingHole
H9
MountingHole
RGB LEDS
ON/OFF RGB LED
U16
EAST1616RGBA8
R6
100R
R7
150R
R8
100R
START RGB LED
U17
EAST1616RGBA8
R10
100R
R11
150R
R12
100R
SCREEN CONNECTOR
R40
4.7K
J16
SCREEN CONNECTOR
SCREEN_CS
SCREEN_DC
SCREEN_VCC
SCREEN_GND
SCL
SDA
https://www.waveshare.com/wiki/2.23inch_OLED_HAT
i2c address =b0111100
IN HEX = 0x3C
Reviewed by:
STEEL FORM
Sheet: /PCB 2/
File: PCB 2.kicad_sch
Title: DISHWASHER
Size: A4
Date: 2022-02-01
Rev: 1
KiCad E.D.A. kicad (6.0.0)
Id: 3/3