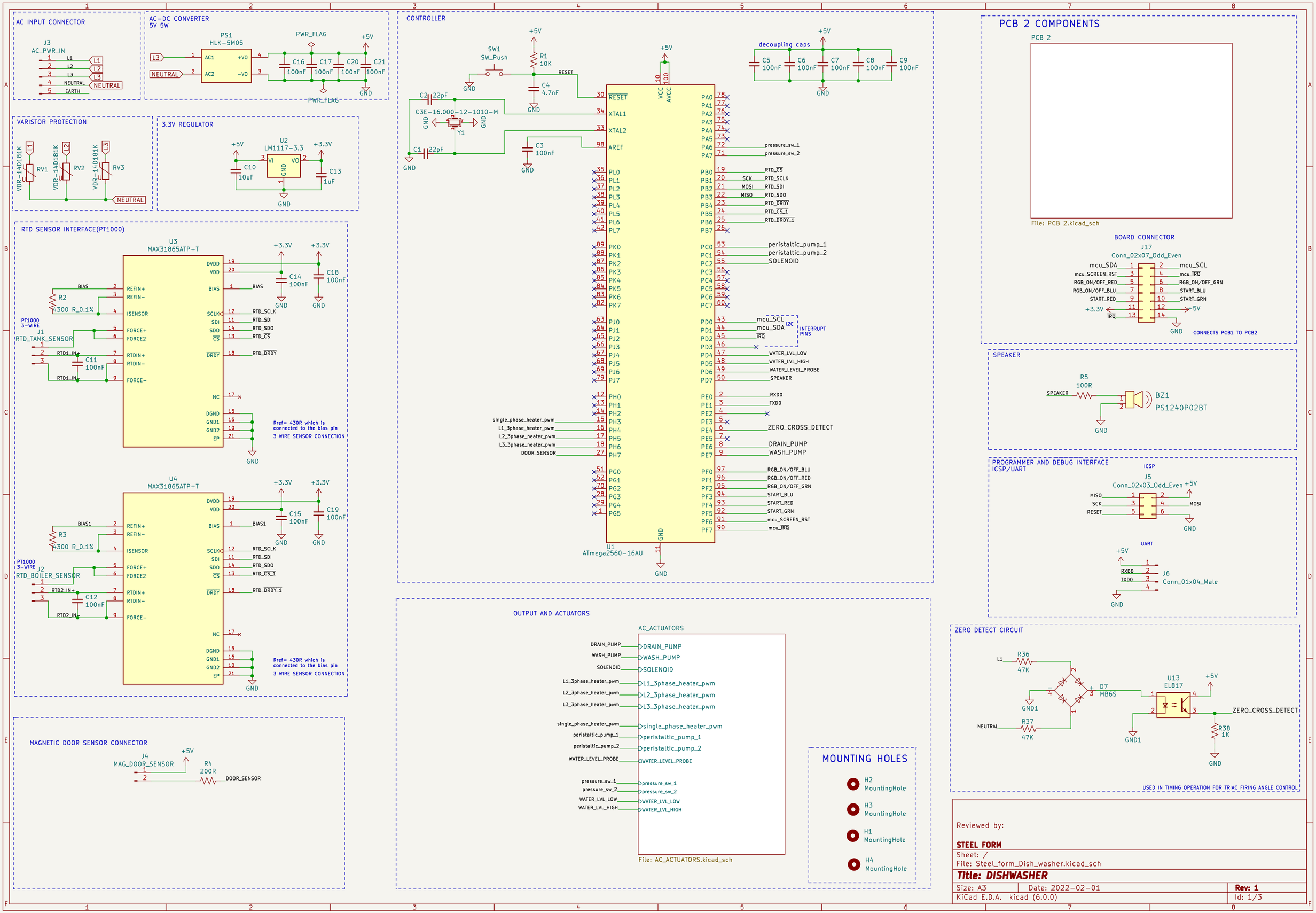
AC INPUT CONNECTOR
J3
AC_PWR_IN
L1
L2
L3
NEUTRAL
EARTH
AC-DC CONVERTER
5V 5W
PS1
HLK-5M05
PWR_FLAG
+5V
C16 100nF
C17 100nF
C20 100nF
C21 100nF
GND
VARISTOR PROTECTION
VDR-140181K
RV1
RV2
RV3
3.3V REGULATOR
U2
LM1117-3.3
+3.3V
C10 10uF
C13 1uF
RTD SENSOR INTERFACE(PT1000)
U3
MAX31865ATP+T
U4
MAX31865ATP+T
PT1000 3-WIRE
J1
RTD_TANK_SENSOR
J2
RTD_BOILER_SENSOR
R2 4300 R_0.1%
R3 4300 R_0.1%
C11 100nF
C12 100nF
C14 100nF
C15 100nF
C18 100nF
C19 100nF
Rref= 430R which is connected to the bias pin
3 WIRE SENSOR CONNECTION
MAGNETIC DOOR SENSOR CONNECTOR
J4
MAG_DOOR_SENSOR
R4 200R
DOOR_SENSOR
CONTROLLER
SW1
SW_Push
R1 10K
C4 4.7nF
RESET
C2 22pF
C1 22pF
C3E-16.000-12-1010-M
Y1
C3 100nF
U1
ATmega2560-16AU
decoupling caps
C5 100nF
C6 100nF
C7 100nF
C8 100nF
C9 100nF
pressure_sw_1
pressure_sw_2
RTD_CS
SCK
RTD_SCLK
MOSI
RTD_SDI
MISO
RTD_SDO
RTD_DRDY
RTD_CS_1
RTD_DRDY_1
peristaltic_pump_1
peristaltic_pump_2
SOLENOID
mcu_SCL
mcu_SDA
IRQ
I2C
INTERRUPT PINS
WATER_LVL_LOW
WATER_LVL_HIGH
WATER_LEVEL_PROBE
SPEAKER
RXD0
TXD0
ZERO_CROSS_DETECT
DRAIN_PUMP
WASH_PUMP
RGB_ON/OFF_BLU
RGB_ON/OFF_RED
RGB_ON/OFF_GRN
START_BLU
START_RED
START_GRN
mcu_SCREEN_RST
mcu_IRQ
single_phase_heater_pwm
L1_3phase_heater_pwm
L2_3phase_heater_pwm
L3_3phase_heater_pwm
OUTPUT AND ACTUATORS
AC_ACTUATORS
File: AC_ACTUATORS.kicad_sch
MOUNTING HOLES
H2 MountingHole
H3 MountingHole
H1 MountingHole
H4 MountingHole
PCB 2 COMPONENTS
PCB 2
File: PCB 2.kicad_sch
BOARD CONNECTOR
J17
Conn_02x07_Odd_Even
CONNECTS PCB1 TO PCB2
SPEAKER
R5 100R
BZ1
PS1240P02BT
PROGRAMMER AND DEBUG INTERFACE
ICSP/UART
ICSP
J5
Conn_02x03_Odd_Even
UART
J6
Conn_01x04_Male
ZERO DETECT CIRCUIT
R36 47K
R37 47K
D7 MB6S
U13 EL817
R38 1K
GND1
USED IN TIMING OPERATION FOR TRIAC FIRING ANGLE CONTROL
Reviewed by:
STEEL FORM
Sheet: /
File: Steel_form_Dish_washer.kicad_sch
Title: DISHWASHER
Size: A3
Date: 2022-02-01
Rev: 1
KiCad E.D.A. kicad (6.0.0)
Id: 1/3

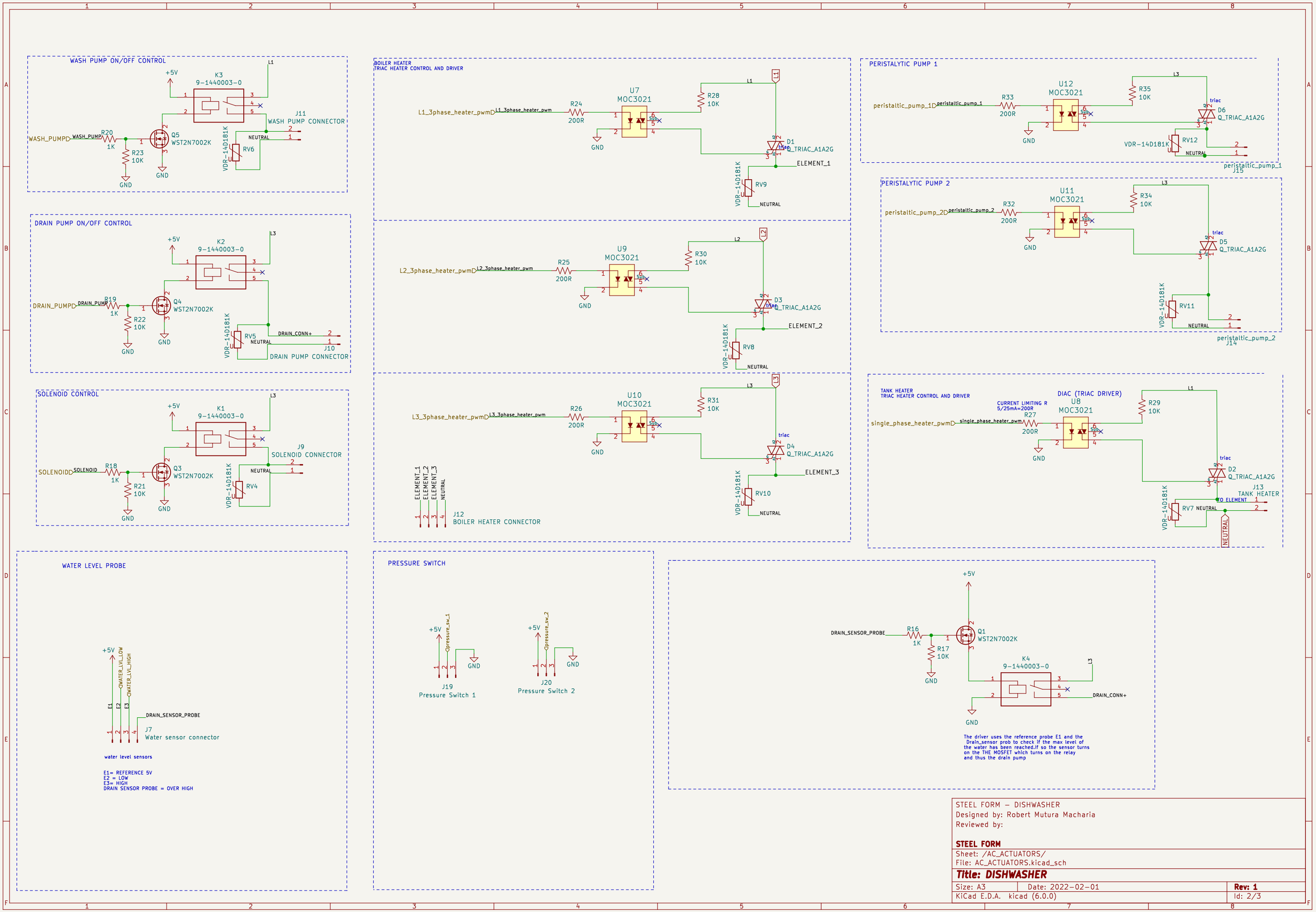

STEEL FORM – DISHWASHER
Designed by: Robert Mutura Macharia
Reviewed by:

STEEL FORM
Sheet: /AC_ACTUATORS/
File: AC_ACTUATORS.kicad_sch

Title: DISHWASHER

Size: A3	Date: 2022-02-01	**Rev: 1**
KiCad E.D.A. kicad (6.0.0)		Id: 2/3

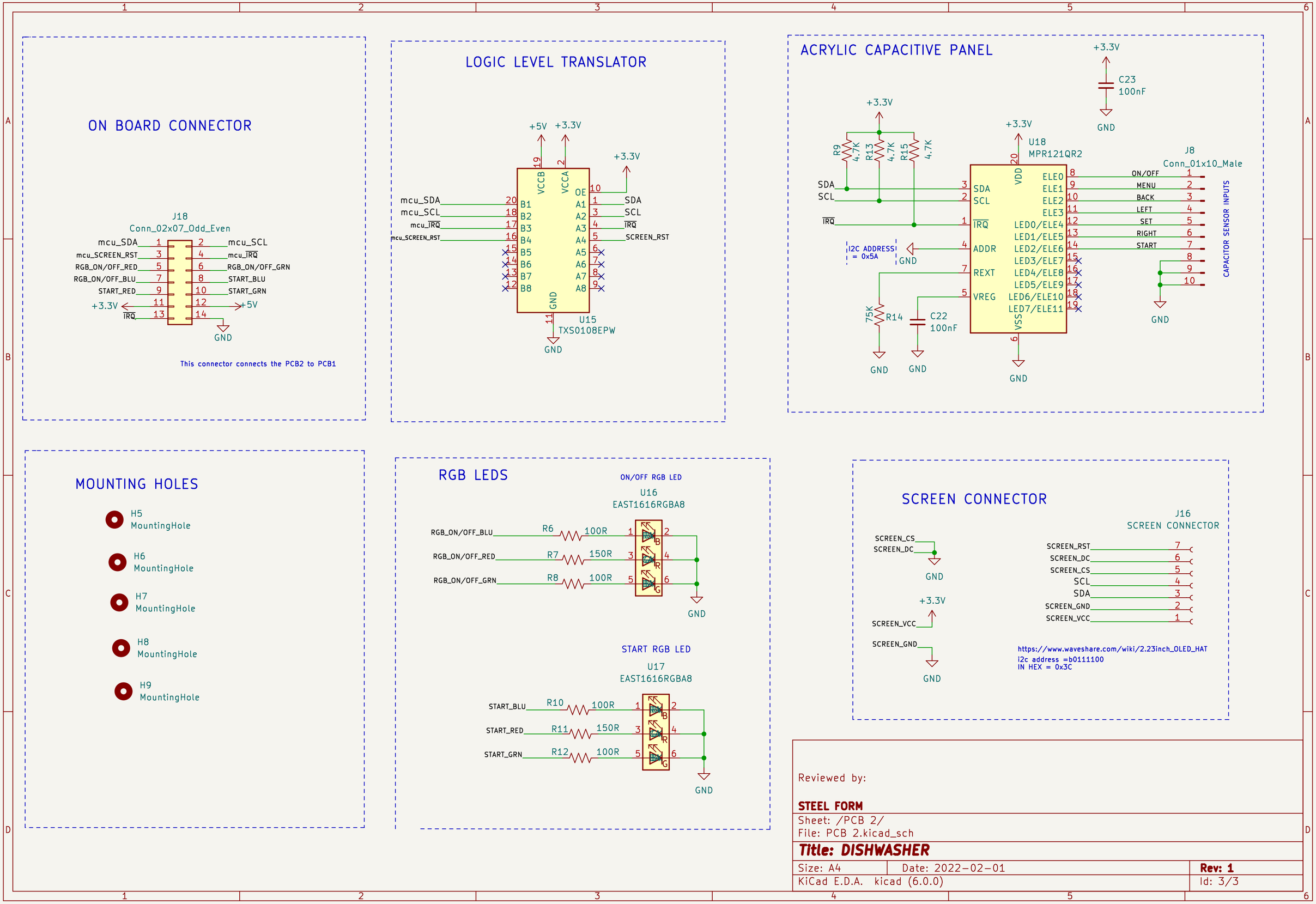

Reviewed by:

STEEL FORM

Sheet: /PCB 2/
File: PCB 2.kicad_sch

Title: DISHWASHER

Size: A4	Date: 2022-02-01	**Rev: 1**
KiCad E.D.A. kicad (6.0.0)		Id: 3/3