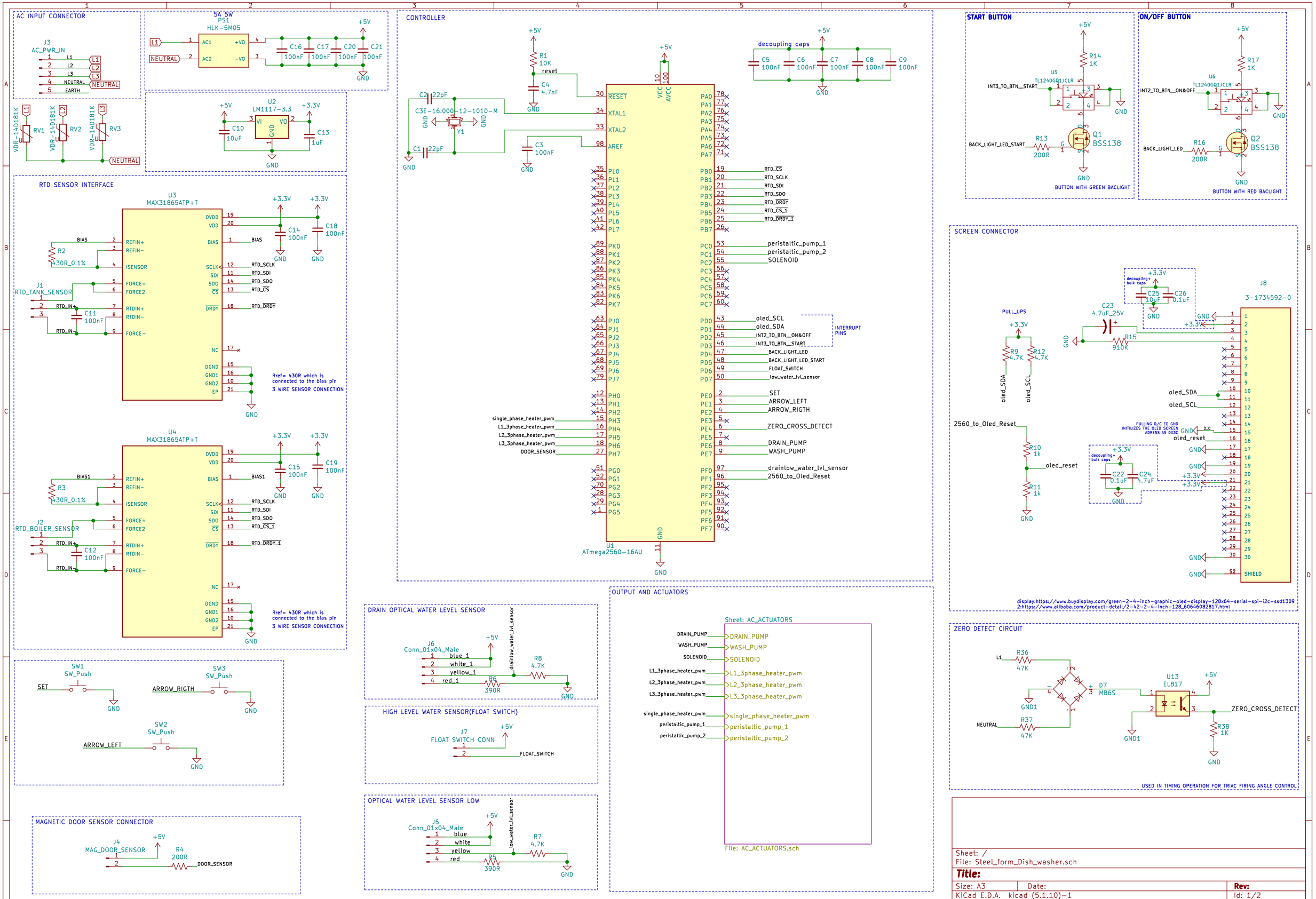
AC INPUT CONNECTOR
J3
AC_PWR_IN
L1
L2
L3
NEUTRAL
EARTH
VDR-14D181K
RV1
RV2
RV3
5A 5W
PS1
HLK-5M05
AC1
AC2
+VO
-VO
C16 100nF
C17 100nF
C20 100nF
C21 100nF
+5V
GND
U2
LM1117-3.3
VI
VO
GND
C10 10uF
C13 1uF
+3.3V
RTD SENSOR INTERFACE
U3
MAX31865ATP+T
REFIN+
REFIN-
ISENSOR
FORCE+
FORCE2
RTDIN+
RTDIN-
FORCE-
DVDD
VDD
BIAS
SCLK
SDI
SDO
CS
DRDY
NC
DGND
GND1
GND2
EP
R2 430R_0.1%
J1
RTD_TANK_SENSOR
C11 100nF
C14 100nF
C18 100nF
RTD_SCLK
RTD_SDI
RTD_SDO
RTD_CS
RTD_DRDY
Rref= 430R which is connected to the bias pin
3 WIRE SENSOR CONNECTION
U4
MAX31865ATP+T
R3 430R_0.1%
J2
RTD_BOILER_SENSOR
C12 100nF
C15 100nF
C19 100nF
RTD_CS_1
RTD_DRDY_1
CONTROLLER
R1 10K
reset
C4 4.7nF
C2 22pF
C1 22pF
C3E-16.000-12-1010-M
Y1
C3 100nF
VCC
AVCC
RESET
XTAL1
XTAL2
AREF
PL0
PL1
PL2
PL3
PL4
PL5
PL6
PL7
PK0
PK1
PK2
PK3
PK4
PK5
PK6
PK7
PJ0
PJ1
PJ2
PJ3
PJ4
PJ5
PJ6
PJ7
PH0
PH1
PH2
PH3
PH4
PH5
PH6
PH7
PG0
PG1
PG2
PG3
PG4
PG5
PA0
PA1
PA2
PA3
PA4
PA5
PA6
PA7
PB0
PB1
PB2
PB3
PB4
PB5
PB6
PB7
PC0
PC1
PC2
PC3
PC4
PC5
PC6
PC7
PD0
PD1
PD2
PD3
PD4
PD5
PD6
PD7
PE0
PE1
PE2
PE3
PE4
PE5
PE6
PE7
PF0
PF1
PF2
PF3
PF4
PF5
PF6
PF7
U1
ATmega2560-16AU
decoupling caps
C5 100nF
C6 100nF
C7 100nF
C8 100nF
C9 100nF
RTD_CS
RTD_SCLK
RTD_SDI
RTD_SDO
RTD_DRDY
RTD_CS_1
RTD_DRDY_1
peristaltic_pump_1
peristaltic_pump_2
SOLENOID
oled_SCL
oled_SDA
INT2_TO_BTN__ON&OFF
INT3_TO_BTN__START
BACK_LIGHT_LED
BACK_LIGHT_LED_START
FLOAT_SWITCH
low_water_lvl_sensor
INTERRUPT PINS
SET
ARROW_LEFT
ARROW_RIGTH
ZERO_CROSS_DETECT
DRAIN_PUMP
WASH_PUMP
drainlow_water_lvl_sensor
2560_to_Oled_Reset
single_phase_heater_pwm
L1_3phase_heater_pwm
L2_3phase_heater_pwm
L3_3phase_heater_pwm
DOOR_SENSOR
START BUTTON
U5
TL1240GQ1JCLR
R14 1K
R13 200R
Q1 BSS138
BUTTON WITH GREEN BACLIGHT
ON/OFF BUTTON
U6
R17 1K
R16 200R
Q2 BSS138
BUTTON WITH RED BACLIGHT
SCREEN CONNECTOR
J8
3-1734592-0
decoupling+ bulk caps
C25 10uF
C26 0.1uF
C23 4.7uF_25V
R15 910K
PULL_UPS
R9 4.7K
R12 4.7K
R10 1k
R11 1k
C22 0.1uF
C24 4.7uF
PULLING D/C TO GND INITILIZES THE OLED SCREEN ADRESS AS 0X3C
D/C
SHIELD
display:https://www.buydisplay.com/green-2-4-inch-graphic-oled-display-128x64-serial-spi-i2c-ssd1309
2:https://www.alibaba.com/product-detail/2-42-2-4-inch-128_60646082817.html
ZERO DETECT CIRCUIT
R36 47K
R37 47K
D7 MB6S
U13 EL817
R38 1K
GND1
USED IN TIMING OPERATION FOR TRIAC FIRING ANGLE CONTROL
SW1 SW_Push
SW2 SW_Push
SW3 SW_Push
ARROW_RIGTH
ARROW_LEFT
DRAIN OPTICAL WATER LEVEL SENSOR
J6
Conn_01x04_Male
blue_1
white_1
yellow_1
red_1
R6 390R
R8 4.7K
HIGH LEVEL WATER SENSOR(FLOAT SWITCH)
J7
FLOAT SWITCH CONN
OPTICAL WATER LEVEL SENSOR LOW
J5
Conn_01x04_Male
blue
white
yellow
red
R5 390R
R7 4.7K
MAGNETIC DOOR SENSOR CONNECTOR
J4
MAG_DOOR_SENSOR
R4 200R
OUTPUT AND ACTUATORS
Sheet: AC_ACTUATORS
File: AC_ACTUATORS.sch
Sheet: /
File: Steel_form_Dish_washer.sch
Title:
Size: A3
Date:
Rev:
KiCad E.D.A. kicad (5.1.10)-1
Id: 1/2

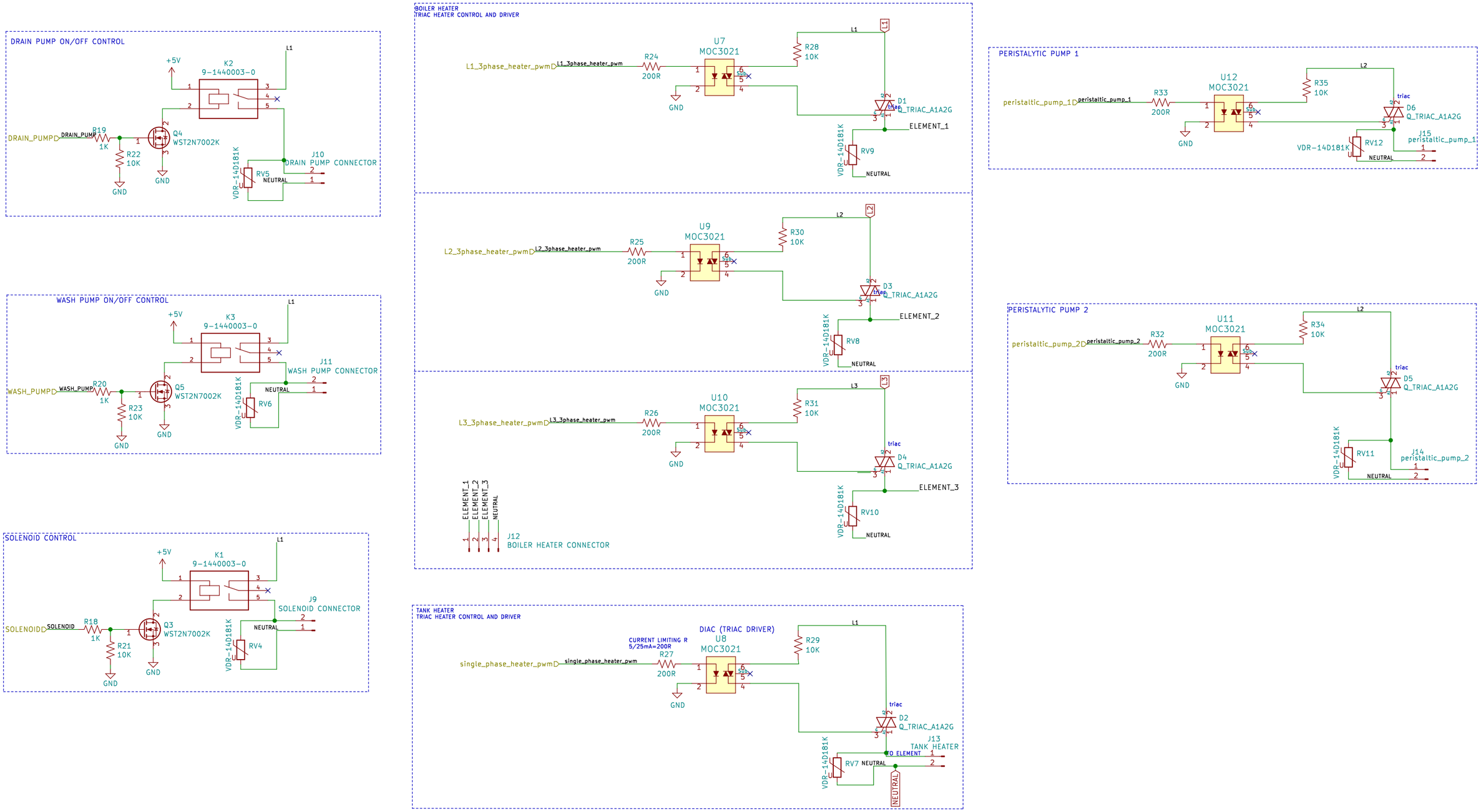

Sheet: /AC_ACTUATORS/
File: AC_ACTUATORS.sch

Title:

Size: A3	Date:	Rev:
KiCad E.D.A. kicad (5.1.10)-1		Id: 2/2