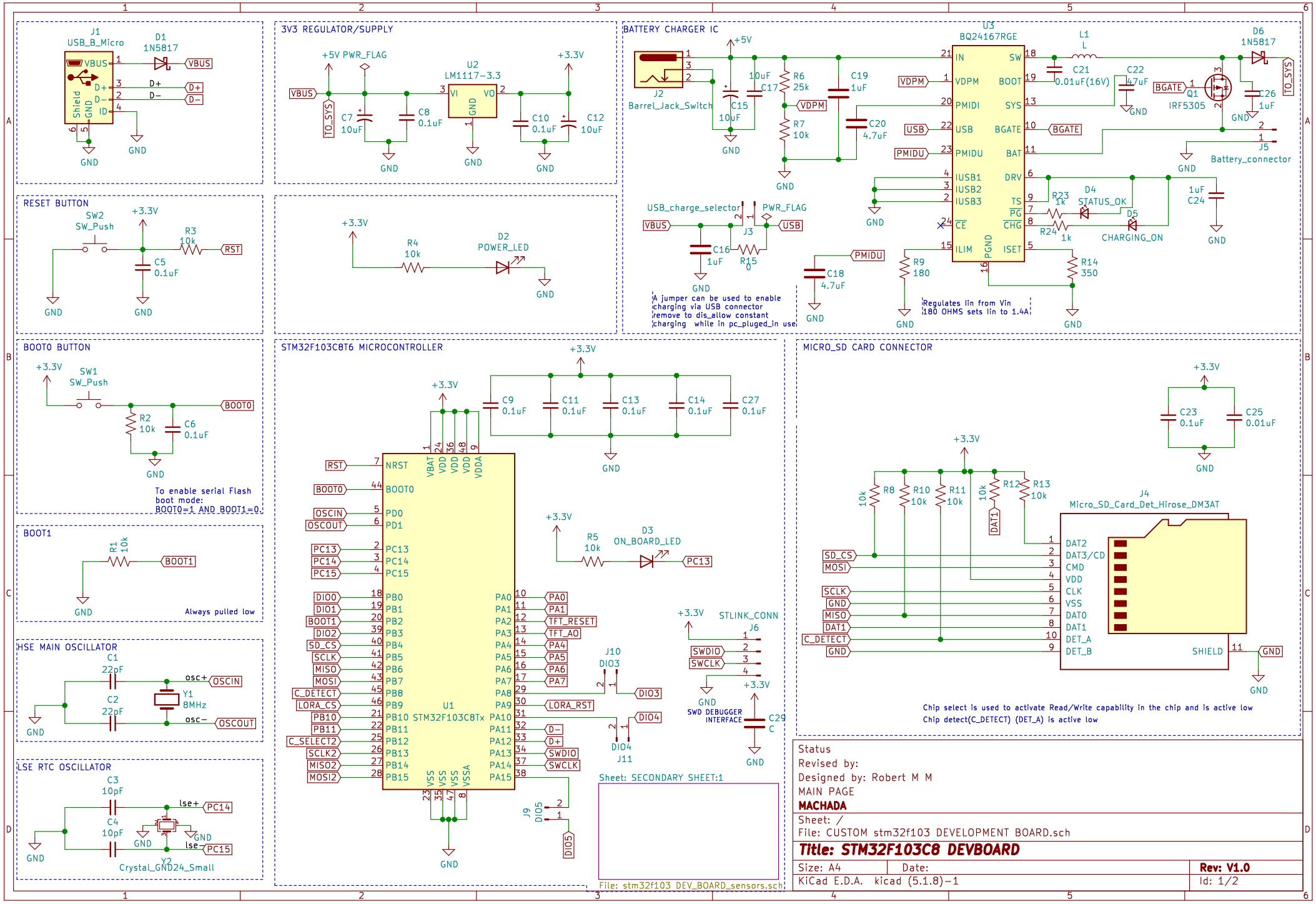
J1
USB_B_Micro
D1
1N5817
VBUS
D+
D−
Shield
GND
ID
3V3 REGULATOR/SUPPLY
+5V PWR_FLAG
U2
LM1117-3.3
VI
VO
+3.3V
TO_SYS
C7
10uF
C8
0.1uF
C10
0.1uF
C12
10uF
BATTERY CHARGER IC
J2
Barrel_Jack_Switch
+5V
C15
10uF
C17
10uF
R6
25k
R7
10k
C19
1uF
C20
4.7uF
U3
BQ24167RGE
IN
VDPM
PMIDI
USB
PMIDU
IUSB1
IUSB2
IUSB3
CE
ILIM
SW
BOOT
SYS
BGATE
BAT
DRV
TS
PG
CHG
ISET
PGND
L1
L
C21
0.01uF(16V)
C22
47uF
D6
1N5817
Q1
IRF5305
C26
1uF
J5
Battery_connector
USB_charge_selector
PWR_FLAG
J3
C16
1uF
R15
0
C18
4.7uF
R9
180
R14
350
R23
1k
R24
1k
D4
STATUS_OK
D5
CHARGING_ON
C24
1uF
A jumper can be used to enable charging via USB connector remove to dis_allow constant charging while in pc_pluged_in use
Regulates Iin from Vin
180 OHMS sets Iin to 1.4A
RESET BUTTON
SW2
SW_Push
R3
10k
C5
0.1uF
R4
10k
D2
POWER_LED
BOOT0 BUTTON
SW1
SW_Push
R2
10k
C6
0.1uF
To enable serial Flash boot mode:
BOOT0=1 AND BOOT1=0.
BOOT1
R1
10k
Always pulled low
HSE MAIN OSCILLATOR
C1
22pF
C2
22pF
Y1
8MHz
osc+
osc−
OSCIN
OSCOUT
LSE RTC OSCILLATOR
C3
10pF
C4
10pF
lse+
lse−
PC14
PC15
Y2
Crystal_GND24_Small
STM32F103C8T6 MICROCONTROLLER
U1
STM32F103C8Tx
NRST
BOOT0
PD0
PD1
PC13
PC14
PC15
PB0
PB1
PB2
PB3
PB4
PB5
PB6
PB7
PB8
PB9
PB10
PB11
PB12
PB13
PB14
PB15
PA0
PA1
PA2
PA3
PA4
PA5
PA6
PA7
PA8
PA9
PA10
PA11
PA12
PA13
PA14
PA15
VBAT
VDD
VDDA
VSS
VSSA
C9
0.1uF
C11
0.1uF
C13
0.1uF
C14
0.1uF
C27
0.1uF
R5
10k
D3
ON_BOARD_LED
TFT_RESET
TFT_AO
LORA_RST
D−
D+
SWDIO
SWCLK
J10
DIO3
J11
DIO4
J9
DIO5
STLINK_CONN
J6
SWD DEBUGGER INTERFACE
C29
C
Sheet: SECONDARY SHEET:1
File: stm32f103_DEV_BOARD_sensors.sch
MICRO_SD CARD CONNECTOR
C23
0.1uF
C25
0.01uF
R8
10k
R10
10k
R11
10k
R12
10k
R13
10k
DAT1
J4
Micro_SD_Card_Det_Hirose_DM3AT
DAT2
DAT3/CD
CMD
VDD
CLK
VSS
DAT0
DAT1
DET_A
DET_B
SHIELD
SD_CS
MOSI
SCLK
MISO
C_DETECT
Chip select is used to activate Read/Write capability in the chip and is active low
Chip detect(C_DETECT) (DET_A) is active low
Status
Revised by:
Designed by: Robert M M
MAIN PAGE
MACHADA
Sheet: /
File: CUSTOM stm32f103 DEVELOPMENT BOARD.sch
Title: STM32F103C8 DEVBOARD
Size: A4
Date:
Rev: V1.0
KiCad E.D.A. kicad (5.1.8)-1
Id: 1/2

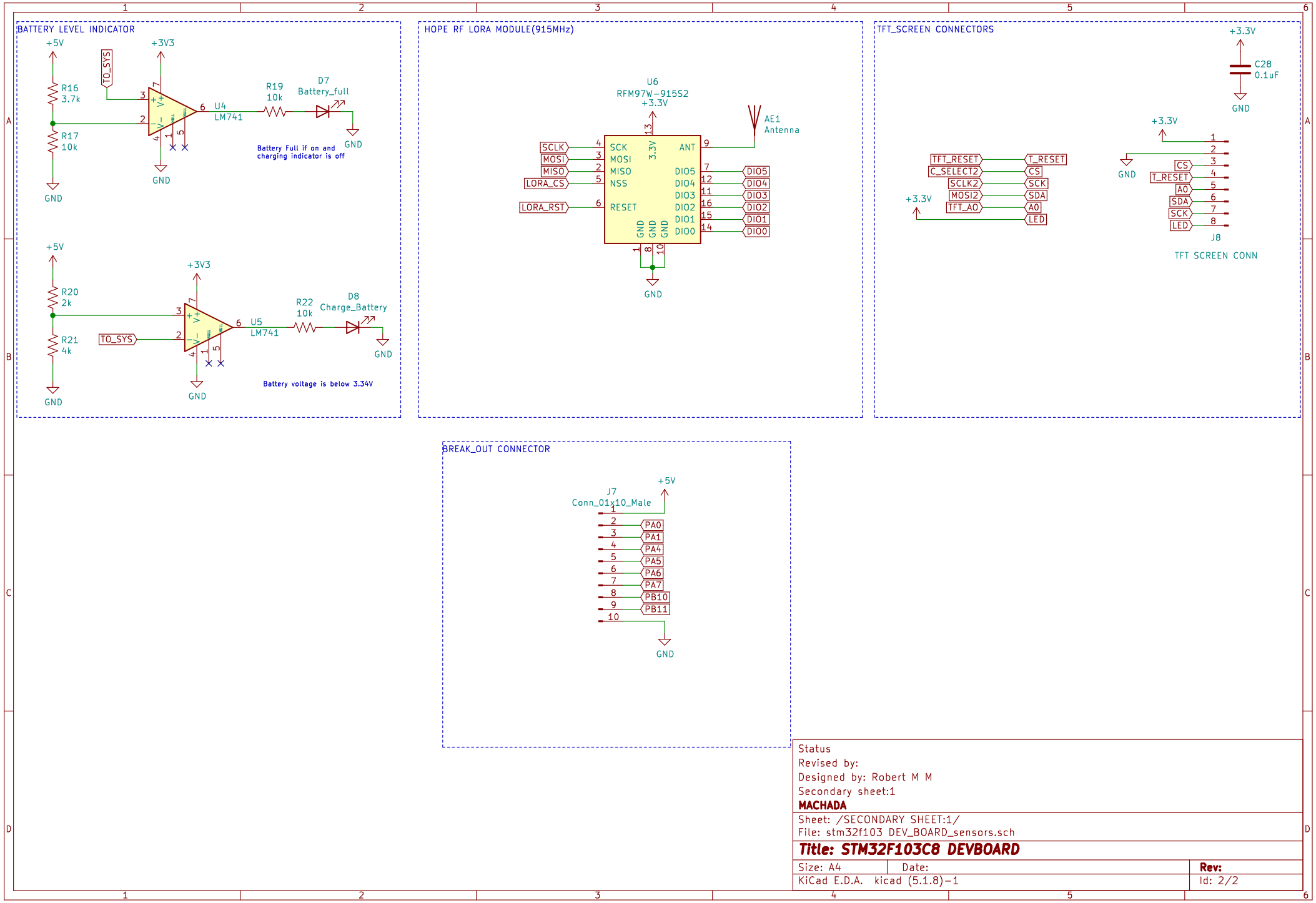
BATTERY LEVEL INDICATOR
+5V
+3V3
TO_SYS
R16
3.7k
R17
10k
U4
LM741
R19
10k
D7
Battery_full
GND
Battery Full if on and charging indicator is off
R20
2k
R21
4k
U5
LM741
R22
10k
D8
Charge_Battery
Battery voltage is below 3.34V
HOPE RF LORA MODULE(915MHz)
U6
RFM97W-915S2
+3.3V
AE1
Antenna
SCLK
MOSI
MISO
LORA_CS
LORA_RST
SCK
MOSI
MISO
NSS
RESET
3.3V
ANT
DIO5
DIO4
DIO3
DIO2
DIO1
DIO0
GND
TFT_SCREEN CONNECTORS
C28
0.1uF
TFT_RESET
C_SELECT2
SCLK2
MOSI2
TFT_A0
T_RESET
CS
SCK
SDA
A0
LED
J8
TFT SCREEN CONN
BREAK_OUT CONNECTOR
J7
Conn_01x10_Male
PA0
PA1
PA4
PA5
PA6
PA7
PB10
PB11
Status
Revised by:
Designed by: Robert M M
Secondary sheet:1
MACHADA
Sheet: /SECONDARY SHEET:1/
File: stm32f103 DEV_BOARD_sensors.sch
Title: STM32F103C8 DEVBOARD
Size: A4
Date:
Rev:
KiCad E.D.A. kicad (5.1.8)-1
Id: 2/2