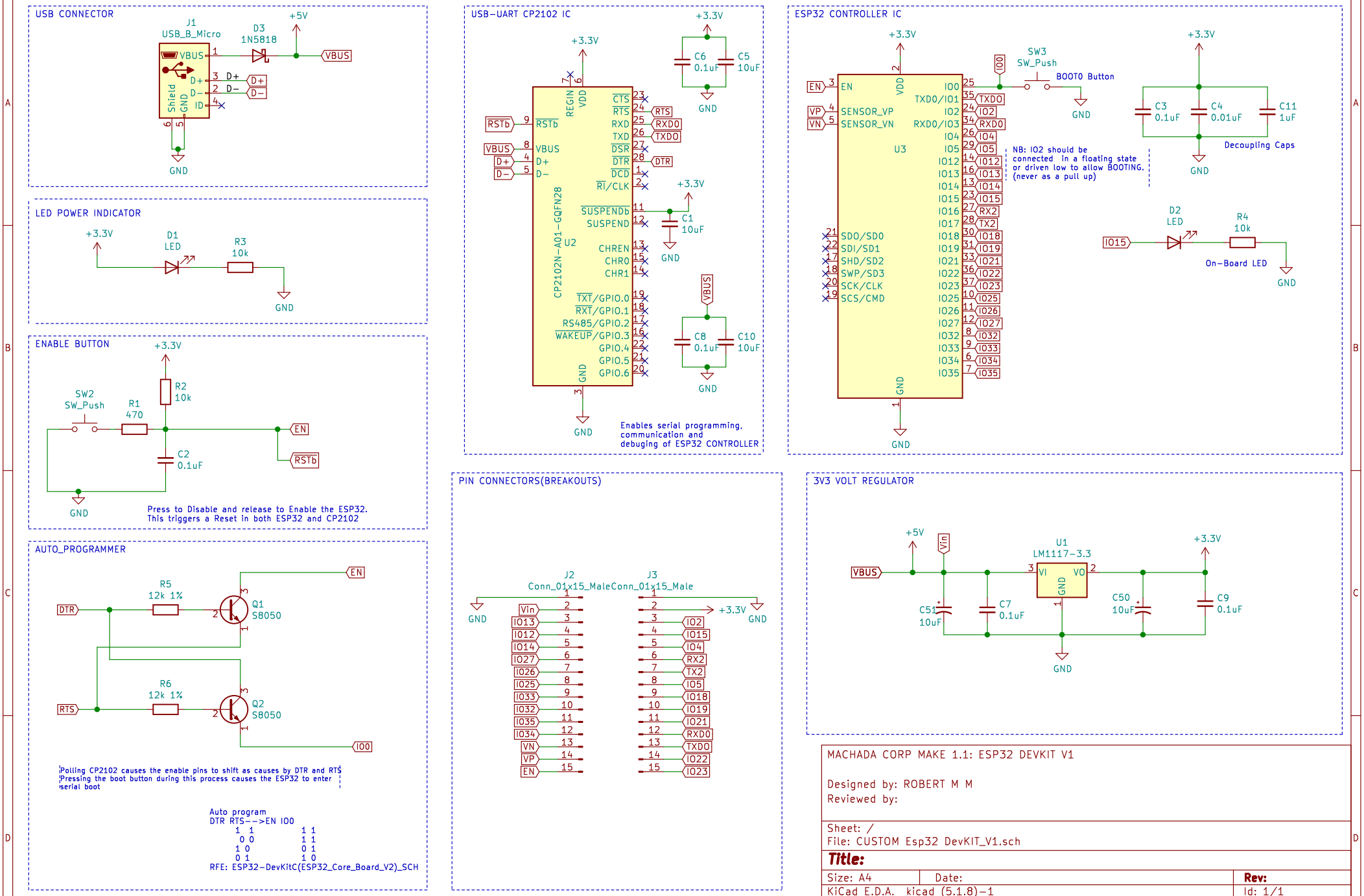
USB CONNECTOR
J1
USB_B_Micro
D3
1N5818
+5V
VBUS
D+
D−
ID
Shield
GND
LED POWER INDICATOR
+3.3V
D1
LED
R3
10k
GND
ENABLE BUTTON
SW2
SW_Push
R1
470
R2
10k
C2
0.1uF
EN
RSTb
Press to Disable and release to Enable the ESP32.
This triggers a Reset in both ESP32 and CP2102
AUTO_PROGRAMMER
R5
12k 1%
Q1
S8050
DTR
R6
12k 1%
Q2
S8050
RTS
IO0
Polling CP2102 causes the enable pins to shift as causes by DTR and RTS
Pressing the boot button during this process causes the ESP32 to enter
serial boot
Auto program
DTR RTS−−>EN IO0
1 1 1 1
0 0 1 1
1 0 0 1
0 1 1 0
RFE: ESP32−DevKitC(ESP32_Core_Board_V2)_SCH
USB−UART CP2102 IC
C6
0.1uF
C5
10uF
REGIN
VDD
CTS
RTS
RXD
TXD
DSR
DTR
DCD
RI/CLK
SUSPENDb
SUSPEND
CHREN
CHR0
CHR1
TXT/GPIO.0
RXT/GPIO.1
RS485/GPIO.2
WAKEUP/GPIO.3
GPIO.4
GPIO.5
GPIO.6
VBUS
D+
D−
CP2102N−A01−GQFN28
U2
C1
10uF
C8
0.1uF
C10
10uF
Enables serial programming,
communication and
debuging of ESP32 CONTROLLER
ESP32 CONTROLLER IC
U3
EN
SENSOR_VP
SENSOR_VN
SDO/SD0
SDI/SD1
SHD/SD2
SWP/SD3
SCK/CLK
SCS/CMD
IO0
TXD0/IO1
IO2
RXD0/IO3
IO4
IO5
IO12
IO13
IO14
IO15
RX2
TX2
IO18
IO19
IO21
IO22
IO23
IO25
IO26
IO27
IO32
IO33
IO34
IO35
SW3
SW_Push
BOOT0 Button
NB: IO2 should be
connected in a floating state
or driven low to allow BOOTING.
(never as a pull up)
C3
0.1uF
C4
0.01uF
C11
1uF
Decoupling Caps
D2
LED
R4
10k
On−Board LED
PIN CONNECTORS(BREAKOUTS)
J2
Conn_01x15_Male
J3
Conn_01x15_Male
3V3 VOLT REGULATOR
U1
LM1117−3.3
VI
VO
GND
Vin
C51
10uF
C7
0.1uF
C50
10uF
C9
0.1uF
MACHADA CORP MAKE 1.1: ESP32 DEVKIT V1
Designed by: ROBERT M M
Reviewed by:
Sheet: /
File: CUSTOM Esp32 DevKIT_V1.sch
Title:
Size: A4
Date:
Rev:
KiCad E.D.A. kicad (5.1.8)−1
Id: 1/1