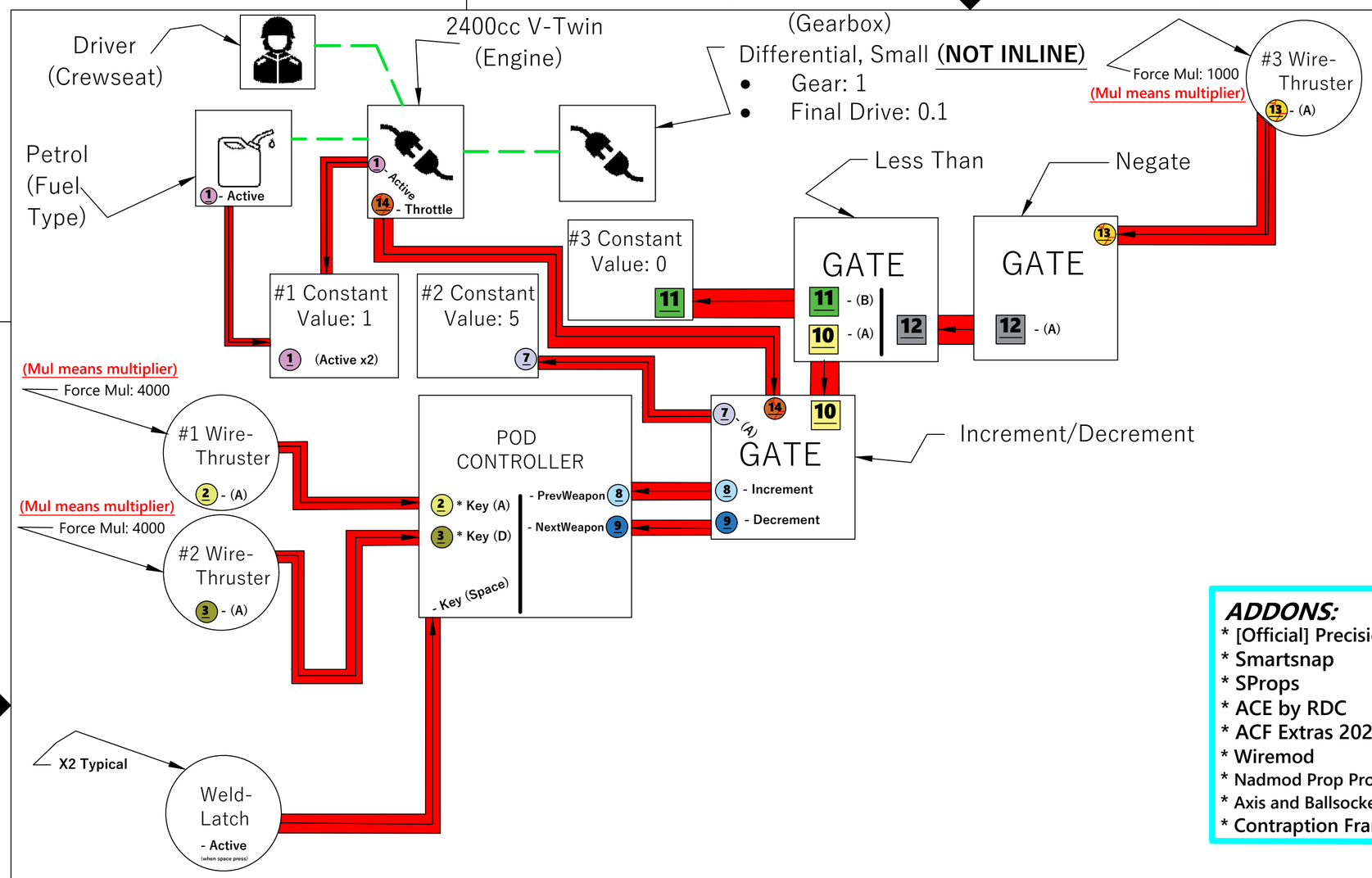

REVISIONS				
ZONE	REV	DESCRIPTION	DATE	APPROVED

NOTATION/LENGENDS:

= OUTPUT by wiring tool (the end result must be the output regardless)

= LINKED ACE TOOL (ACE MENU)

1 2 3 4 5 6

= Small colored circles or boxes highlight features needing linkage (this symbol will be used to reduce confusion in the drawing).

= From the first point: Left-click before the arrow to the last point; left-click after the arrow.

= Miscellaneous Wiremod/ACE

= Variation symbols Wiremod/ACE

= Specifications/notes

ADDONS:

* [Official] Precision Tool
* Smartsnap
* SProps
* ACE by RDC
* ACF Extras 2023
* Wiremod
* Nadmod Prop Protection
* Axis and Ballsocket Centre
* Contraption Framework

Misc:

* X3 Thruster (Wire)
* X3 Constant Value
* X2 Weld Latch (Wire)
* X4 Wheels (Props)
* Driver (Crewseat)
* Fuel Tank (Petrol)
* Engine (2400cc V-Twin)
* Gearbox (Differential-Small)
* Pod Controller
* Car Seat
* Gate Less Than
* Gate Negate
* Gate Increment/Decrement

TOOLS:

* **Ace Menu (that's the tool name)**
* **Constraint Remover**
* **Precision**
* **Weight - Improved**
* **Stacker - Improved**
* **Advance Duplicator 2**
* **Axis - Centre**
* **Wire (Wiring)**
* **Weld**
* **Make Spherical**
* **Latch (Wire)**

*For Simple Process See Page 3 (FPGA Experience Aka Field-Programmable Gate Array)

*For Trouble Shooting Chart Refer to My Process Sheet Sequence 60A (Common Issues 101)

Notes:

- Build a simple car frame with prop wheels; true wheels realistically sink into the ground, so avoid tool wheels for authentic steering (no realistic steering in this simple car tutorial)
(CAUTION: face north with the map before building the car to avoid quirky game mechanics; see my process sheet sequence 10A for ways to find north direction)
- Link the Crewseat Driver, Fuel Tank, and Gearbox to the Engine using the **ACE MENU Tool** (e.g., right-click on the Engine and right-click on the Fuel Tank)
(Optional: disable Legality Crewseat Check by typing acf_legality_largeenginesneeddriver 0 in the console if you don't want a driver in your car)
- Activate the fuel tank and engine using either a constant value of 1, a Wire Button set to Toggle Value on: 1, or Expression 2 (programmer experience) — any of these methods will work
- Link the Engine & Gearbox (**ACE MENU Tool**)
(ensure that the engine port and the gearbox port are aligned to each other to enable linkage; otherwise, an error will appear on your screen)
- Choose either Front-Wheel or Rear-Wheel Drive, and link the gearbox to the wheels **(ACE MENU TOOL)** as illustrated in process sheet sequence 30A
- Link the Engine to the Gate Increment/Decrement **(Wiring Tool)**
- Link the Gate Increment/Decrement to the #2 Constant value
- Link the Pod Controller to the car seat by right-clicking both the Pod Controller and the car seat with the Pod Controller tool in hand
- Link the Gate Increment/Decrement to the Pod Controller (automatic throttle is not included in this basic ACE car tutorial)
- Place one thruster on each side of the car and another at the center back of your car
- Latch your back wheels by left-clicking on the wheel, then the car frame, and finally the location to place the controller **(Latch Tool)**
-Please see next page (#2)

FILE NAME	ACE Essentials
CONTRACT NO	Dean's Office
DRAWN	2024/10/7
CHECK	|R-0-1-X|Ice Frost
APPR.	2024/11/6
ISSUED	2024/11/22

GMOD Engineer Academy: The Machinist's Sanctuary

Simple Car

ACE (Armored Combat Extended)

SIZE	FSCM NO	DWG NO	REV
	–	0000–0005	
SCALE 1:1		WEIGHT	SHEET 1 of 4

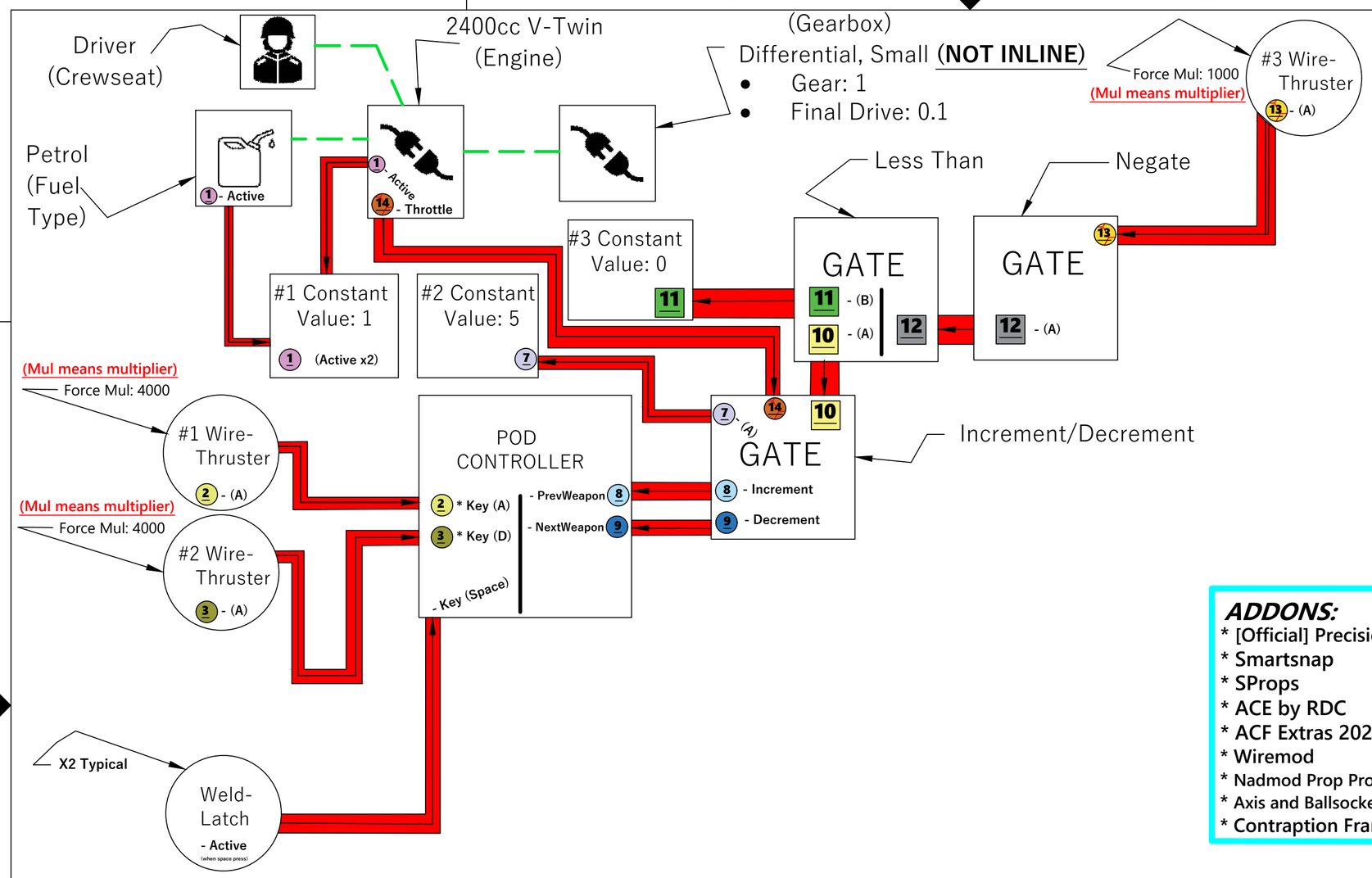

REVISIONS				
ZONE	REV	DESCRIPTION	DATE	APPROVED

NOTATION/LENGENDS:

= OUTPUT by wiring tool (the end result must be the output regardless)

= LINKED ACE TOOL (ACE MENU)

1 2 3 4 5 6

= Small colored circles or boxes highlight features needing linkage (this symbol will be used to reduce confusion in the drawing).

= From the first point: Left-click before the arrow to the last point; left-click after the arrow.

= Miscellaneous Wiremod/ACE

= Variation symbols Wiremod/ACE

= Specifications/notes

ADDONS:

* [Official] Precision Tool
* Smartsnap
* SProps
* ACE by RDC
* ACF Extras 2023
* Wiremod
* Nadmod Prop Protection
* Axis and Ballsocket Centre
* Contraption Framework

Misc:

* X3 Thruster (Wire)
* X3 Constant Value
* X2 Weld Latch (Wire)
* X4 Wheels (Props)
* Driver (Crewseat)
* Fuel Tank (Petrol)
* Engine (2400cc V-Twin)
* Gearbox (Differential-Small)
* Pod Controller
* Car Seat
* Gate Less Than
* Gate Negate
* Gate Increment/D-ecrement

TOOLS:

* **Ace Menu (that's the tool name)**
* **Constraint Remover**
* **Precision**
* **Weight - Improved**
* **Stacker - Improved**
* **Advance Duplicator 2**
* **Axis - Centre**
* **Wire (Wiring)**
* **Weld**
* **Make Spherical**
* **Latch (Wire)**

Notes:

- Link the NEGATE gate to the LESS THAN gate
- Link the back thruster of your car to the NEGATE gate.
- Link the LESS THAN gate to the INCREMENT/DECREMENT gate
- Link the LESS THAN gate to the #3 Constant Value
- Link the left & right thruster to the Pod Controller

(THE LOGIC: If we press 'D' to move right, the car moves right; if we press 'A' to move left, the car moves left)

- Link all the constraint latches to the Pod Controller
- Apply all prop wheels using the Make Spherical tool (plug and play; don't worry about the settings, as this is just a basic ACE car)
- Controls are: scroll wheel up & scroll wheel down (to throttle), key a & d to turn, key space to brake

----------YOU'RE FINISHED!----------

- Provide your feedback on this type of document and its design, so the next one will be even better!
- Show your support at https://ko-fi.com/gmodengineeracademy & https://www.youtube.com/@R-0-1-XIceFrost for my motivation fuel, as this format is challenging to create, requiring laborious effort and my digital skills!
- If you want a translation into another language, contact my disposable email, and let's collab!

email: frostice39@yahoo.com

FILE NAME	ACE Essentials
CONTRACT NO	Dean's Office
DRAWN	2024/10/7
CHECK	R-0-1-XIce Frost
APPR.	2024/11/6
ISSUED	2024/11/22

GMOD Engineer Academy: The Machinist's Sanctuary

Simple Car

ACE (Armored Combat Extended)

SIZE	FSCM NO	DWG NO	REV
	–	0000–0005	
SCALE 1:1		WEIGHT	SHEET 2 of 4

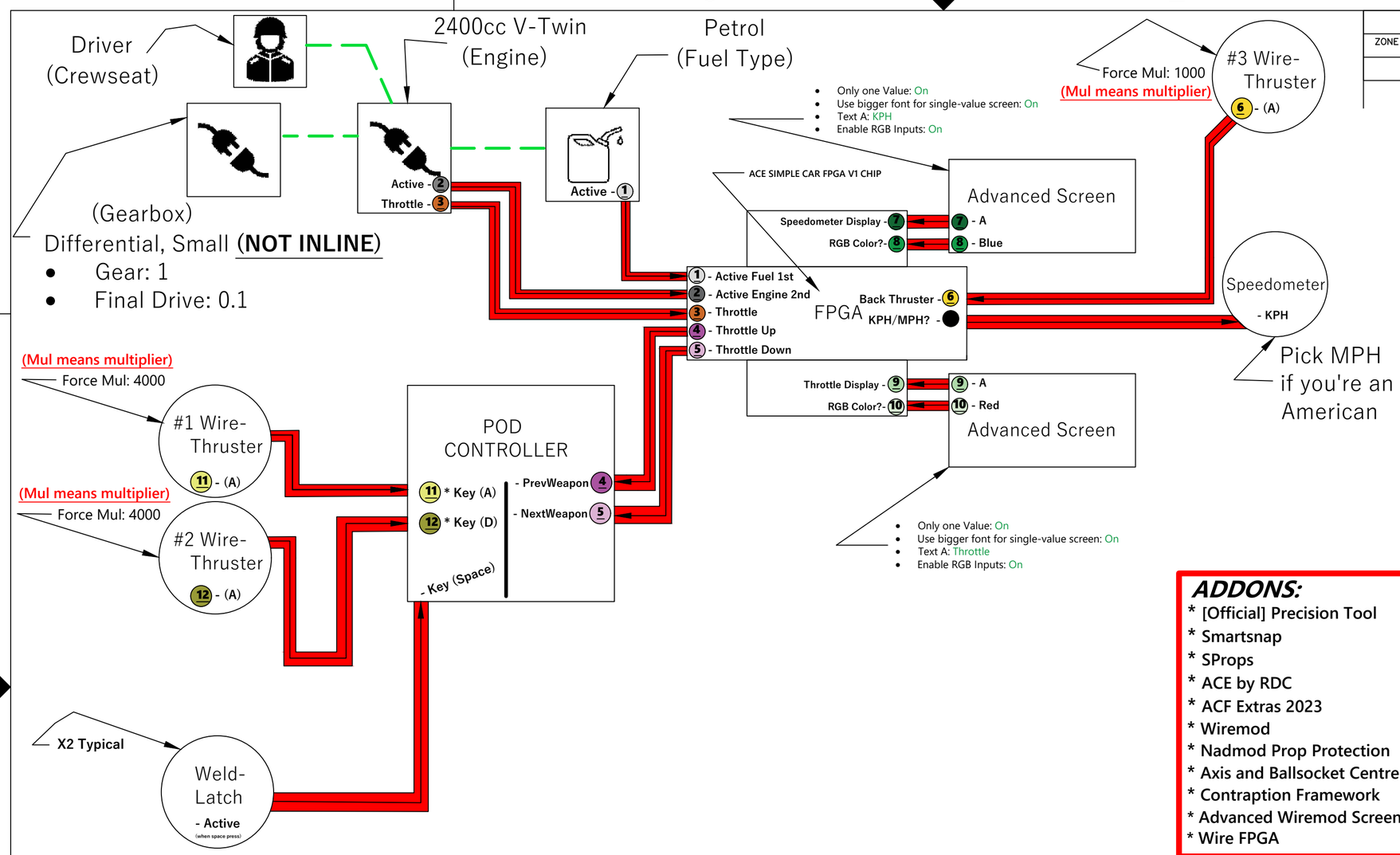

REVISIONS				
ZONE	REV	DESCRIPTION	DATE	APPROVED

NOTATION/LENGENDS:

= OUTPUT by wiring tool (the end result must be the output regardless)

= LINKED ACE TOOL (ACE MENU)

1 2 3 4 5 6

= Small colored circles or boxes highlight features needing linkage (this symbol will be used to reduce confusion in the drawing).

= From the first point: Left-click before the arrow to the last point; left-click after the arrow.

= Miscellaneous Wiremod/ACE

= Variation symbols Wiremod/ACE

= Specifications/notes

ADDONS:

* [Official] Precision Tool
* Smartsnap
* SProps
* ACE by RDC
* ACF Extras 2023
* Wiremod
* Nadmod Prop Protection
* Axis and Ballsocket Centre
* Contraption Framework
* Advanced Wiremod Screen
* Wire FPGA

Misc:

* X3 Thruster (Wire)
* ~~X3 Constant Value~~
* X2 Weld Latch (Wire)
* X4 Wheels (Props)
* Driver (Crewseat)
* Fuel Tank (Petrol)
* Engine (2400cc V-Twin)
* Gearbox (Differential-Small)
* Pod Controller
* Car Seat

~~* Gate Less Than~~
~~* Gate Negate~~
~~* Gate Increment/Decrement~~
*ACE SIMPLE CAR-FPGA V1 Chip

TOOLS:

* **Ace Menu (that's the tool name)**
* **Constraint Remover**
* **Precision**
* **Weight - Improved**
* **Stacker - Improved**
* **Advance Duplicator 2**
* **Axis - Centre**
* **Wire (Wiring)**
* **Weld**
* **Make Spherical**
* **Latch (Wire)**

*For Trouble Shooting Chart Refer to My Process Sheet FPGA Sequence 60A (Common Issues 101)

Notes:

- Build a simple car frame with prop wheels; true wheels realistically sink into the ground, so avoid tool wheels for authentic steering (no realistic steering in this simple car tutorial)
(CAUTION: face north with the map before building the car to avoid quirky game mechanics; see my process sheet sequence 10A for ways to find north direction)
- Link the Crewseat Driver, Fuel Tank, and Gearbox to the Engine using the **ACE MENU Tool** (e.g., right-click on the Engine and right-click on the Fuel Tank)
(Optional: disable Legality Crewseat Check by typing acf_legality_largeenginesneeddriver 0 in the console if you don't want a driver in your car)
- Link the Plug Chain #1 to Chain #1 using the Wiring Tool while building the rest of the car, as my FPGA Chip requires time to start up for the Advanced Screen.
(Make sure the Inputs & Timed are on in FPGA Editor! Also, the Excution Interval Every is 0.01)
- Link the Fuel Tank & the Engine to the FPGA
- Link the Engine & Gearbox (**ACE MENU Tool**)
(ensure that the engine port and the gearbox port are aligned to each other to enable linkage; otherwise, an error will appear on your screen)
- Choose either Front-Wheel or Rear-Wheel Drive, and link the gearbox to the wheels **(ACE MENU TOOL)** as illustrated in process sheet sequence 30A
- Link the Engine to the FPGA **(Wiring Tool)**
- Link the Pod Controller to the car seat by right-clicking both the Pod Controller and the car seat with the Pod Controller tool in hand
- Link the FPGA to the Pod Controller (automatic throttle is not included in this basic ACE car tutorial)
- Place one thruster on each side of the car and another at the center back of your car
- Latch your back wheels by left-clicking on the wheel, then the car frame, and finally the location to place the controller **(Latch Tool)**
-Please see next page (#4)

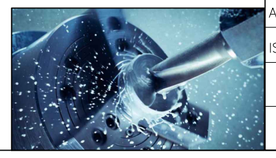

FILE NAME	ACE Essentials
CONTRACT NO	Dean's Office
DRAWN	2024/11/11
CHECK	|R-0-1-X|Ice Frost
APPR.	2024/11/16
ISSUED	2024/11/22

GMOD Engineer Academy: The Machinist's Sanctuary

Simple Car

ACE (Armored Combat Extended)

SIZE	FSCM NO	DWG NO	REV
	–	0000-0006	
SCALE 1:1		WEIGHT	SHEET 3 of 4

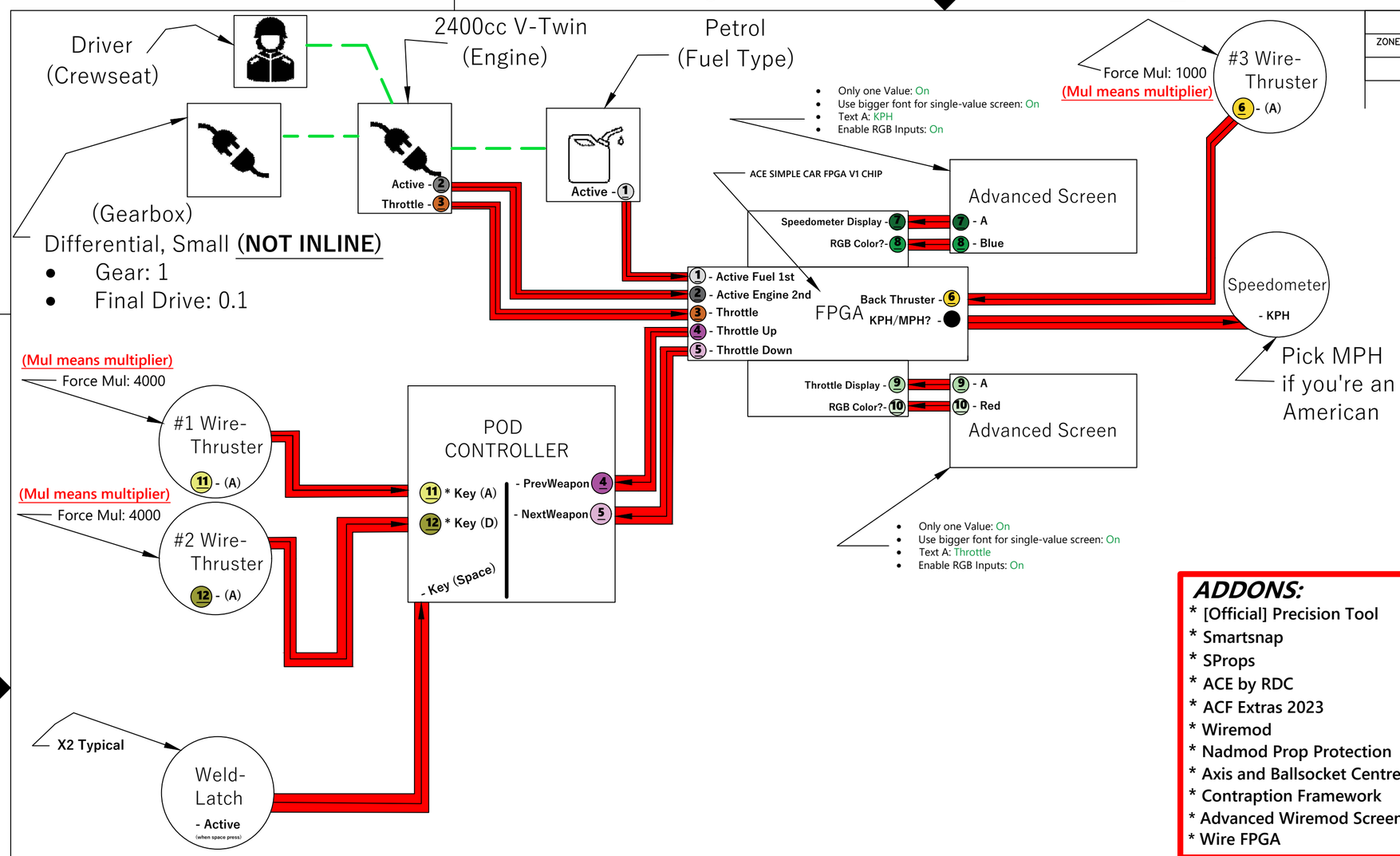

REVISIONS				
ZONE	REV	DESCRIPTION	DATE	APPROVED

NOTATION/LENGENDS:

= OUTPUT by wiring tool (the end result must be the output regardless)

= LINKED ACE TOOL (ACE MENU)

1 2 3 4 5 6

= Small colored circles or boxes highlight features needing linkage (this symbol will be used to reduce confusion in the drawing).

= From the first point: Left-click before the arrow to the last point; left-click after the arrow.

= Miscellaneous Wiremod/ACE

= Variation symbols Wiremod/ACE

= Specifications/notes

ADDONS:

* [Official] Precision Tool
* Smartsnap
* SProps
* ACE by RDC
* ACF Extras 2023
* Wiremod
* Nadmod Prop Protection
* Axis and Ballsocket Centre
* Contraption Framework
* Advanced Wiremod Screen
* Wire FPGA

Misc:

* X3 Thruster (Wire)
* ~~X3 Constant Value~~
* X2 Weld Latch (Wire)
* X4 Wheels (Props)
* Driver (Crewseat)
* Fuel Tank (Petrol)
* Engine (2400cc V-Twin)
* Gearbox (Differential-Small)
* Pod Controller
* Car Seat

~~* Gate Less Than~~
~~* Gate Negate~~
~~* Gate Increment/Decrement~~
*ACE SIMPLE CAR-FPGA V1 Chip

TOOLS:

* **Ace Menu (that's the tool name)**
* **Constraint Remover**
* **Precision**
* **Weight - Improved**
* **Stacker - Improved**
* **Advance Duplicator 2**
* **Axis - Centre**
* **Wire (Wiring)**
* **Weld**
* **Make Spherical**
* **Latch (Wire)**

Notes:

- Link the back thruster of your car to the FPGA
- Link the left & right thruster to the Pod Controller
(THE LOGIC: If we press 'D' to move right, the car moves right; if we press 'A' to move left, the car moves left)
- Link all the constraint latches to the Pod Controller
- Link the Advanced Screen to the FPGA
- Apply all prop wheels using the Make Spherical tool (plug and play; don't worry about the settings, as this is just a basic ACE car)
- Controls are: scroll wheel up & scroll wheel down (to throttle), key a & d to turn, key space to brake

----------YOU'RE FINISHED!----------

- Provide your feedback on this type of document and its design, so the next one will be even better!
- Show your support at https://ko-fi.com/gmodengineeracademy & https://www.youtube.com/@R-0-1-XIceFrost for my motivation fuel, as this format is challenging to create, requiring laborious effort and my digital skills!
- If you want a translation into another language, contact my disposable email, and let's collab!

email: frostice39@yahoo.com

FILE NAME	ACE Essentials
CONTRACT NO	Dean's Office
DRAWN	2024/11/11
CHECK	|R-0-1-X|Ice Frost
APPR.	2024/11/16
ISSUED	2024/11/22

GMOD Engineer Academy: The Machinist's Sanctuary

Simple Car

ACE (Armored Combat Extended)

SIZE	FSCM NO	DWG NO	REV
	–	0000–0006	

SCALE 1:1 | WEIGHT | SHEET 4 of 4