REVISIONS				
ZONE	REV	DESCRIPTION	DATE	APPROVED

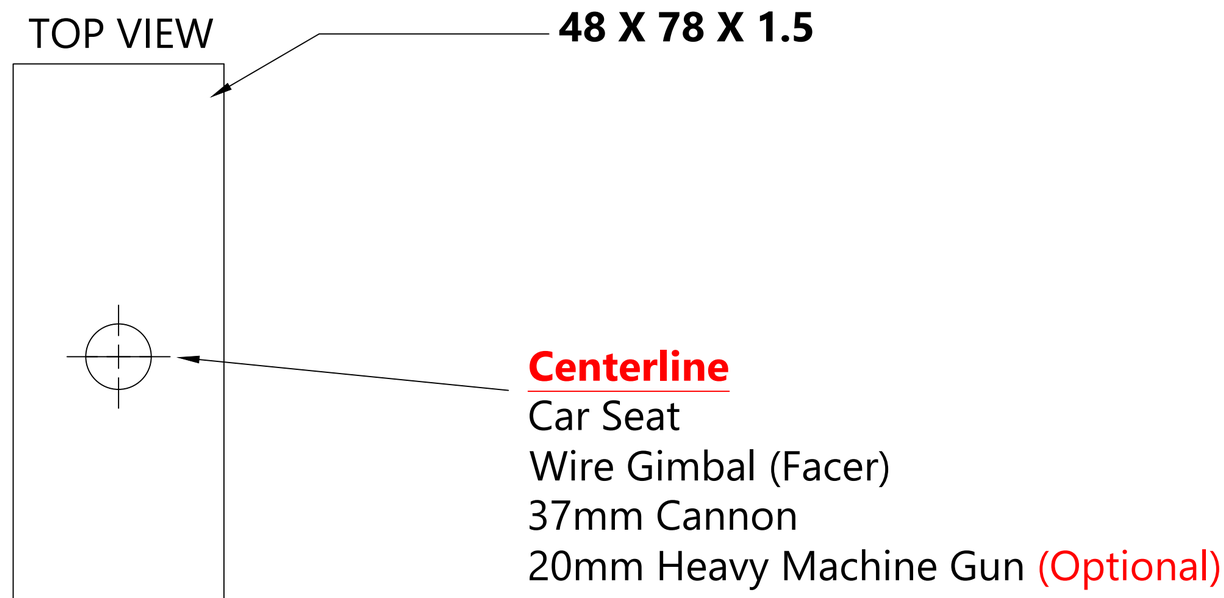

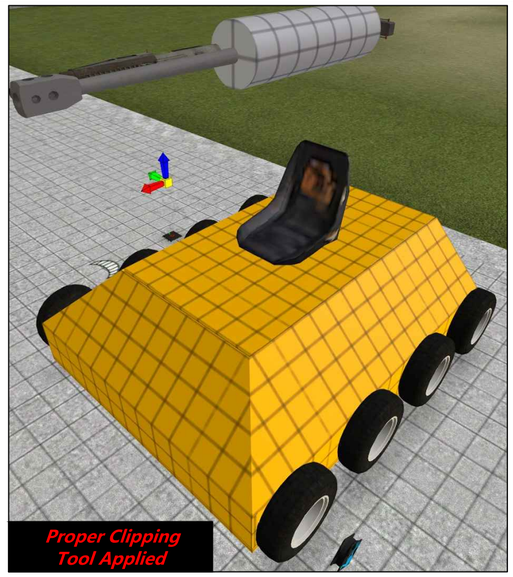

ISOMETRIC
(VIEWS)
INTERIOR

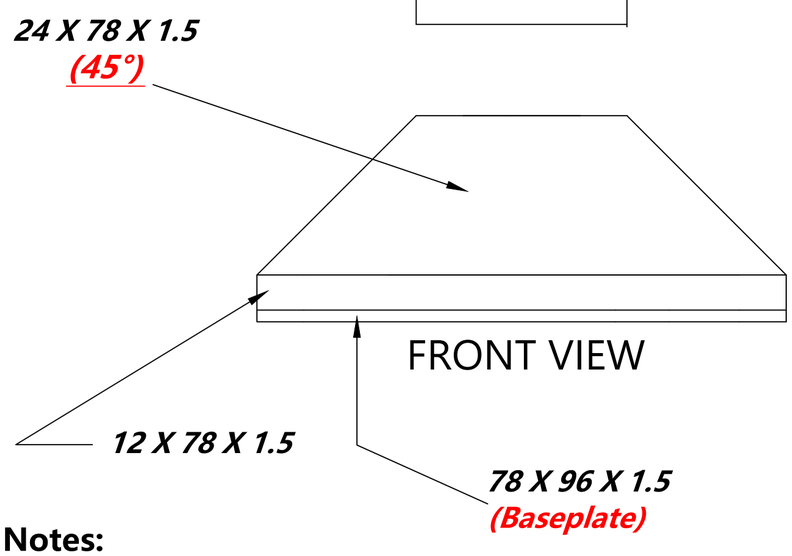

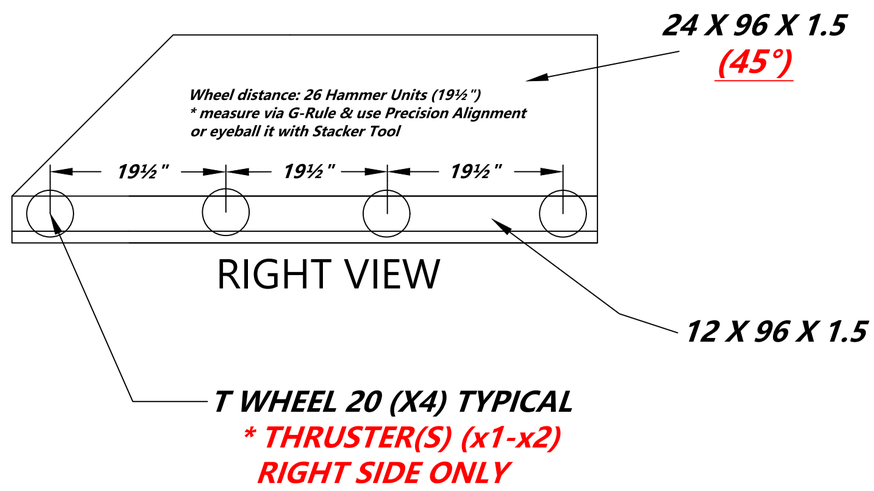

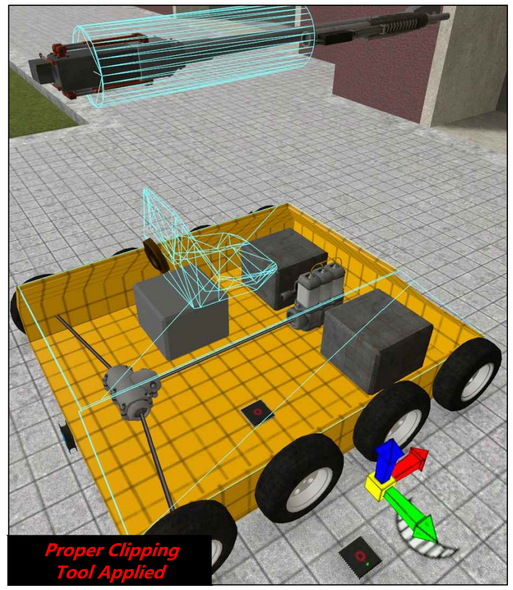

Notes:

- All dimensions based on SProps (Hammer Units)
* Fun fact: 1 Hammer Unit = ¾ inch (1 × 0.75 = 0.75")
- Install the required addons/tools (see sheet #2)
- Build a simple tank with this reference; trim parts using the Proper Clipping/Visual Clip tool, or design your own tank

CAUTION: Face the map's North direction before building — secures constraint alignment on future dupes (see process sheet OP 10A)

- Apply Make Spherical to all wheels before adding any constraints (Axis/Ball Socket Centre etc) to the baseplate
- Start setting up ACE & Wiremod components
- Wiremod E2 Setup — Sheets #2 & #3
- ~~Wiremod Gate (FPGA) Setup – sheet #X (old school method)~~
  — **Abandoned: too much work, not worth it long term compared with E2** (**FPGA chip included for reference**)
- Multi Parent everything except baseplate, wheels, gimbal, ace guns, and E2 (see process sheet OP 50C for procedure)
- Armor, weight and decor are your choice (e.g. ACE Armor Properties Tool, Tank Track Tool, Material Tool etc)

Tip:
Some players dislike
• Excessive Prop2Mesh use
• Outdated E2/Starfall chips for ACF/ACE
• Certain building methods

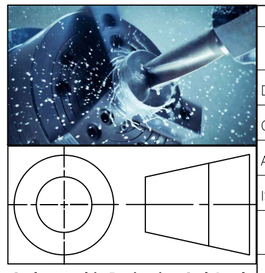

Orthographic Projection 3rd Angle

FILE NAME	ACE Essentials
CONTRACT NO	Dean's Office
DRAWN	2025/09/29
CHECK	|R–0–1–X|Ice Frost
APPR.	2026/8/23
ISSUED	2026/8/23

GMOD Engineer Academy: The Machinist's Sanctuary

Simple Tank Layout

ACE (Armored Combat Extended)

SIZE	FSCM NO	DWG NO	REV
	–	0000–0008	
SCALE 1:1		WEIGHT	SHEET 1 of 3

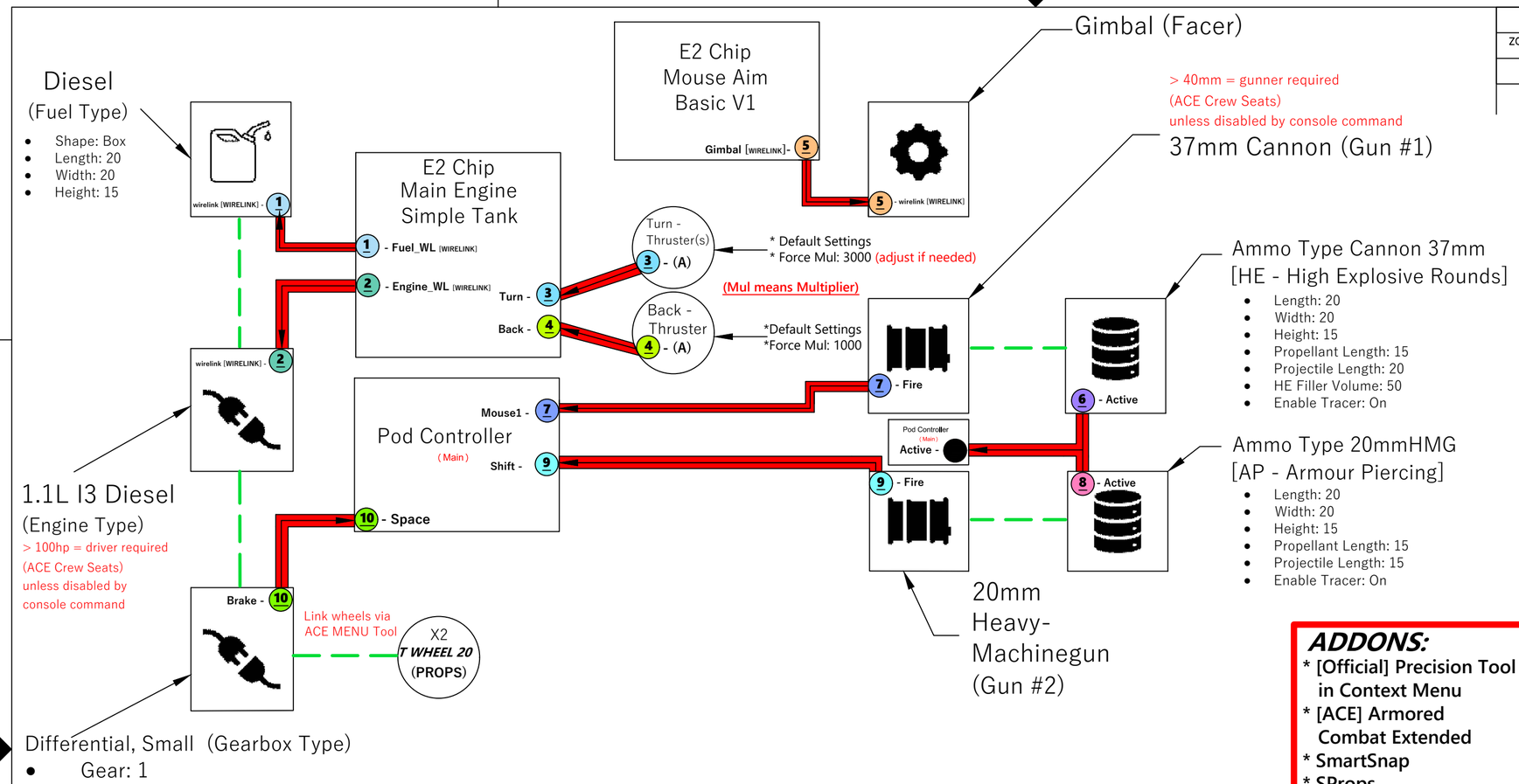

REVISIONS				
ZONE	REV	DESCRIPTION	DATE	APPROVED

NOTATION/LENGENDS:

= OUTPUT by wiring tool (the end result must be the output regardless)

= LINKED BY ACE TOOL (ACE MENU)

1 2 3 4 5 6

= Small colored circles or boxes highlight features needing linkage (this symbol will be used to reduce confusion in the drawing)

= From the first point: Left-click before the arrow to the last point; left-click after the arrow

= Miscellaneous Wiremod/ACE

= Variation symbols Wiremod/ACE

= Specifications/notes

ADDONS:

* [Official] Precision Tool in Context Menu
* [ACE] Armored Combat Extended
* SmartSnap
* SProps
* Wiremod
* Nadmod Prop Protection
* Axis/Ballsocket Centre
* Contraption Framework
* Model Property
* G-Rule Tool - Advanced Measurement

Misc:

* X2 Thruster (Wire)
* X8 Wheels (Props)
* Fuel Tank (Diesel)
* Engine (1.1L I3 Diesel)
* Gearbox (Differential, Small)
* Pod Controller (Wire)
* Car Seat (Vehicle)
* Gimbal (Facer)
* 37mm Cannon (Weapon #1)
* 20mm HMG (Weapon #2)

*E2 Mouse Aim Basic V1 Chip

* E2 Main Engine Simple Tank Chip

* Ammo Type Cannon 37mm [HE - High Explosive Rounds]

* Ammo Type 20mmHMG [AP - Armour Piercing]

TOOLS:

* **Ace Menu (that's the tool name)**
* **Multi-Parent / Unparent**
* **Constraint Remover**
* **Precision Alignment**
* **Weight - Improved**
* **Stacker - Improved**
* **Advance Duplicator 2**
* **Axis - Centre**
* **Wire (Wiring)**
* **Make Spherical**
* **Prop Mover**
* **Smart Weld**
* **Smart Remover**
* **Proper Clipping**
  (Or Visual Clip)

Notes:

- Required addons are in my workshop collection https://steamcommunity.com/sharedfiles/filedetails/?id=3768055632 for easy access (Ice Frost's Toolbox: Hardcore Builder Picks 2026)
- Add ACE parts (Fuel Tank, Gearbox, Engine)
→ Link with ACE Menu Tool (right click to link)
(Add Gimbal & Guns later)
- Add Wiremod parts (Thrusters, Pod Controller)
- Spawn car seat, link to Pod Controller (right click)
- Place E2 Chip "Simple Tank Main Engine" on the tank baseplate **(latest fixes and updates can be found on my GitHub)**
- Begin wiring components (wiring tool)
- Fuel_WL → Fuel, Engine_WL → Engine (Plug & Play; fuel actives first, engine last)
- Thruster (A) → Turn (if the direction is reversed, edit E2 → Result = Down AND Result = -Down)
- Thruster (A) → Back (if the direction is reversed, edit E2 → Reverse = 1)
- Find centerline SProp 48×78×1.5 (Top View) using Precision Alignment → use either Point Coordinate Centre or Bounding Box Centre
- Set up Car Seat, Gimbal & Guns (see process sheet #90 OP for details)
- Please see next sheet #3 to continue next page

FILE NAME	ACE Essentials
CONTRACT NO	Dean's Office
DRAWN	2025/10/5
CHECK	|R-0-1-X|Ice Frost
APPR.	2026/8/23
ISSUED	2026/8/23

GMOD Engineer Academy: The Machinist's Sanctuary

Simple Tank E2

ACE (Armored Combat Extended)

SIZE	FSCM NO	DWG NO	REV
	–	0000–0009	
SCALE 1:1		WEIGHT	SHEET 2 of 3

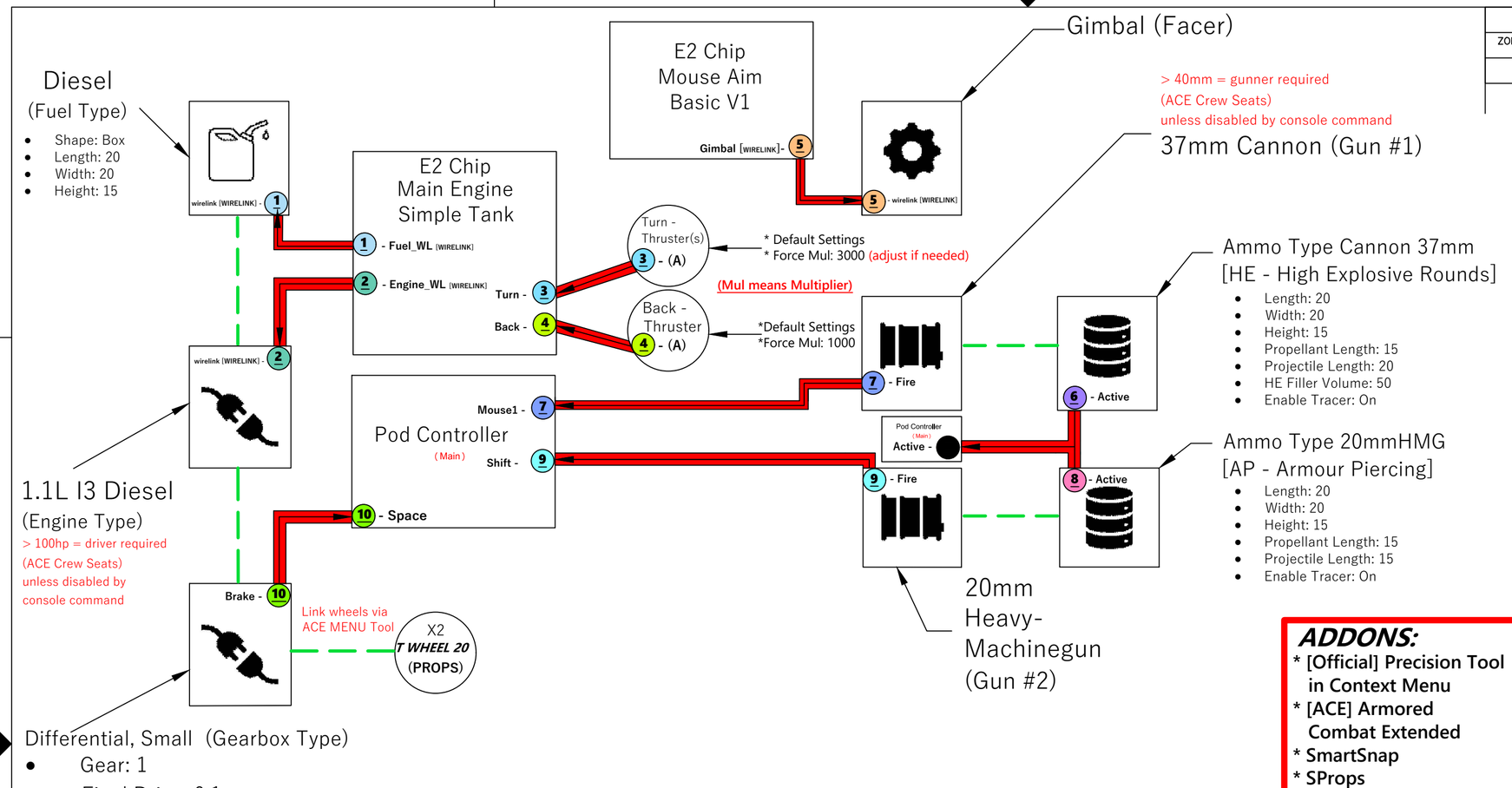

REVISIONS				
ZONE	REV	DESCRIPTION	DATE	APPROVED

NOTATION/LENGENDS:

= OUTPUT by wiring tool (the end result must be the output regardless)

= LINKED BY ACE TOOL (ACE MENU)

1 2 3 4 5 6

= Small colored circles or boxes highlight features needing linkage (this symbol will be used to reduce confusion in the drawing)

= From the first point: Left-click before the arrow to the last point; left-click after the arrow

= Miscellaneous Wiremod/ACE

= Variation symbols Wiremod/ACE

= Specifications/notes

ADDONS:

* [Official] Precision Tool in Context Menu
* [ACE] Armored Combat Extended
* SmartSnap
* SProps
* Wiremod
* Nadmod Prop Protection
* Axis/Ballsocket Centre
* Contraption Framework
* Model Property
* G-Rule Tool - Advanced Measurement

Misc:

* X2 Thruster (Wire)
* X8 Wheels (Props)
* Fuel Tank (Diesel)
* Engine (1.1L I3 Diesel)
* Gearbox (Differential, Small)
* Pod Controller (Wire)
* Car Seat (Vehicle)
* Gimbal (Facer)
* 37mm Cannon (Weapon #1)
* 20mm HMG (Weapon #2)

*E2 Mouse Aim Basic V1 Chip

* E2 Main Engine Simple Tank Chip

* Ammo Type Cannon 37mm [HE - High Explosive Rounds]

* Ammo Type 20mmHMG [AP - Armour Piercing]

TOOLS:

* Ace Menu (that's the tool name)
* Multi-Parent / Unparent
* Constraint Remover
* Precision Alignment
* Weight - Improved
* Stacker - Improved
* Advance Duplicator 2
* Axis - Centre
* Wire (Wiring)
* Make Spherical
* Prop Mover
* Smart Weld
* Smart Remover
* Proper Clipping (Or Visual Clip)

Notes:

- Enable Propcore (E2 extensions from the Q menu > utilities and enable propcore)
- Place E2 Chip "Mouse Aim Basic V1" **(latest fixes and updates can be found on my GitHub)**
~~* For proper calibration, orient the chip to the map's North direction (see process sheet X for details)~~ Type /Zero in game chat for auto calibration
* (Optional) Adjust turn rate Gimbal in code → Rate = 0.6 (lower number = slower)
- Wire E2 Mouse Aim Basic V1 → Gimbal (Plug & Play)
* If the Gimbal aims in the opposite direction when activated: negate the Eye vector (line 119 E2 code)
e.g Eye = entity():toLocalAxis(owner():eye()) to Eye = -entity():toLocalAxis(owner():eye())
- Enable Crosshair from the Pod Controller e.g Crosshairs → Active (Pod's Outputs)
* (Optional) Classic Crosshair recommended (type crosshair 1 & crosshair_setup in console command to enable)
- Wire ammo boxes → Pod Controller (Active)
- Wire Guns → Pod Controller (Or Guns → E2's Output Mouse Aim Basic V1 "Guns Splitter" Or "Wirelink"]
- Link ammo boxes → Guns via ACE Menu Tool
- Link two wheels → Gearbox via ACE Menu Tool
*** Console commands how to disable legality checks ***
acf_legality_largegunsneedgunner 0
acf_legality_largeenginesneeddriver 0
For more commands head to website acegmod.com > Console Commands
Support my work on YouTube, GitHub, or Ko-fi —
your support shows my niche skills and GMOD R&D projects are appreciated!
- **https://github.com/R01XIceFrost/GMOD-Engineer-Academy-The-Machinist-s-Sanctuary**
- **https://www.youtube.com/@R-0-1-XIceFrost**
- **https://ko-fi.com/gmodengineeracademy**
****Discords for ACF/ACE & Wiremod/Starfall will be listed in the process sheet!****

FILE NAME	ACE Essentials
CONTRACT NO	Dean's Office
DRAWN	2025/10/5
CHECK	|R-0-1-X|Ice Frost
APPR.	2026/8/23
ISSUED	2026/8/23

GMOD Engineer Academy: The Machinist's Sanctuary

Simple Tank E2

ACE (Armored Combat Extended)

SIZE	FSCM NO	DWG NO	REV
	–	0000–0009	
SCALE 1:1		WEIGHT	SHEET 3 of 3