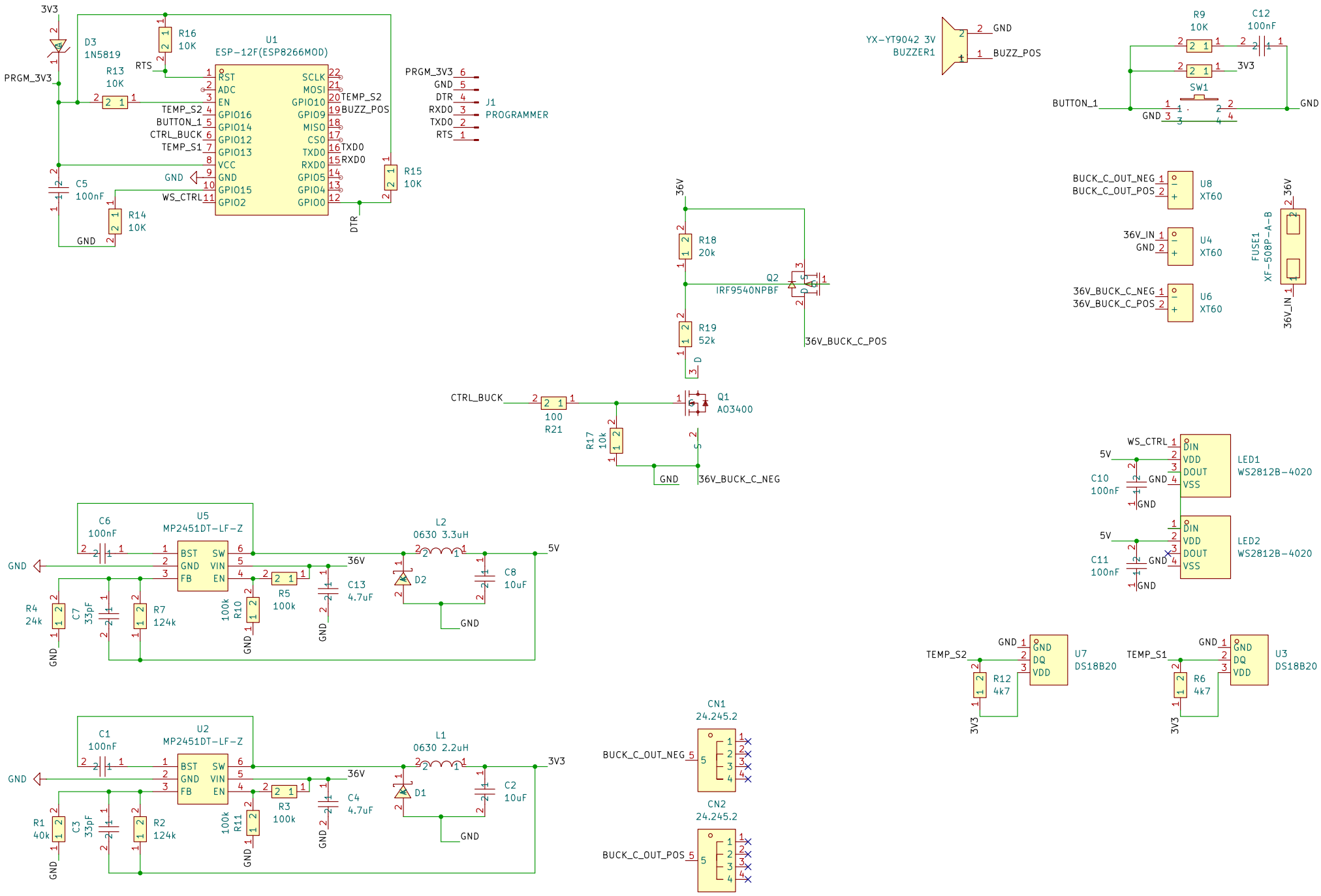
3V3
D3
1N5819
PRGM_3V3
R13
10K
R16
10K
RTS
U1
ESP-12F(ESP8266MOD)
RST
ADC
EN
GPIO16
GPIO14
GPIO12
GPIO13
VCC
GND
GPIO15
GPIO2
SCLK
MOSI
GPIO10
GPIO9
MISO
CS0
TXD0
RXD0
GPIO5
GPIO4
GPIO0
TEMP_S2
BUZZ_POS
TXD0
RXD0
TEMP_S2
BUTTON_1
CTRL_BUCK
TEMP_S1
WS_CTRL
C5
100nF
R14
10K
R15
10K
DTR
PRGM_3V3
GND
DTR
RXD0
TXD0
RTS
J1
PROGRAMMER
YX-YT9042 3V
BUZZER1
GND
BUZZ_POS
R9
10K
C12
100nF
3V3
SW1
BUTTON_1
GND
36V
R18
20k
Q2
IRF9540NPBF
R19
52k
36V_BUCK_C_POS
CTRL_BUCK
100
R21
Q1
AO3400
R17
10k
GND
36V_BUCK_C_NEG
BUCK_C_OUT_NEG
BUCK_C_OUT_POS
U8
XT60
36V_IN
GND
U4
XT60
36V_BUCK_C_NEG
36V_BUCK_C_POS
U6
XT60
FUSE1
XF-508P-A-B
36V
36V_IN
WS_CTRL
5V
C10
100nF
GND
DIN
VDD
DOUT
VSS
LED1
WS2812B-4020
5V
C11
100nF
GND
DIN
VDD
DOUT
VSS
LED2
WS2812B-4020
C6
100nF
U5
MP2451DT-LF-Z
BST
GND
FB
SW
VIN
EN
L2
0630 3.3uH
5V
36V
R5
100k
C13
4.7uF
D2
C8
10uF
R4
24k
C7
33pF
R7
124k
100k
R10
GND
TEMP_S2
GND
DQ
VDD
U7
DS18B20
R12
4k7
3V3
TEMP_S1
U3
DS18B20
R6
4k7
C1
100nF
U2
MP2451DT-LF-Z
L1
0630 2.2uH
3V3
36V
R3
100k
C4
4.7uF
D1
C2
10uF
R1
40k
C3
33pF
R2
124k
100k
R11
CN1
24.245.2
BUCK_C_OUT_NEG
CN2
24.245.2
BUCK_C_OUT_POS