GENERAL NOTES

A. FOR PIPING AND INSTRUMENTATION LEGENDS AND SYMBOLS, SEE P&IDs 0000-PID-0001 THRU 0000-PID-00XX.

B. INSTRUMENT NUMBERS ON THIS P&ID ARE PREFIXED BY THE UNIT NUMBER ASSOCIATED WITH THIS P&ID UNLESS OTHERWISE SPECIFIED.

C. CONTROL VALVES AND BYPASS SIZES ARE PRELIMINARY AND WILL BE CONFIRMED DURING DETAIL DESIGN.

CHECK PRINT

NOT PUBLISHED. ALL RIGHTS RESERVED BY THE ENGINEER. DRAWINGS AND SPECIFICATIONS, AS INSTRUMENTS OF SERVICE, ARE ISSUED TO DESCRIBE DESIGN INTENT. THEY ARE NOT TO BE USED ON OTHER PROJECTS OR EXTENSIONS TO THIS PROJECT, EXCEPT BY AGREEMENT IN WRITING AND WITH APPROPRIATE COMPENSATION TO THE ENGINEER. CONTRACTOR, SUB-CONTRACTORS, & SUPPLIERS ARE RESPONSIBLE FOR CONFIRMING AND CORRELATING DIMENSIONS AND CONDITIONS AT THE JOB SITE, AND SHALL NOTIFY THE ENGINEER IMMEDIATELY OF ANY ERRORS OR DISCREPANCIES IN REGARD TO SUCH. DRAWINGS, DESCRIBING DESIGN INTENT, SHALL NOT INDICATE EVERY DETAIL OR SYSTEM FOR CONSTRUCTION. CONTRACTOR, SUB-CONTRACTORS, AND SUPPLIERS SHALL BE RESPONSIBLE TO PROVIDE ADDITIONAL DRAWINGS AS NECESSARY FOR PERMITS, ERECTION, INSTALLATION, AND CO-ORDINATION OF ALL WORK. CONTRACTOR, SUB-CONTRACTORS, AND SUPPLIERS SHALL BE RESPONSIBLE FOR ALL LABOR AND MATERIALS REQUIRED IN ACCORDANCE WITH DESIGN INTENT. ALL MATERIALS SHALL BE NEW, UNLESS SPECIFIED OTHERWISE, AND SHALL BE INSTALLED LEVEL, PLUMB, STRAIGHT, AND TRUE TO LINE, IN ACCORDANCE WITH THE BEST PRACTICES OF THE TRADES. THE ENGINEER SHALL NOT BE RESPONSIBLE FOR CONSTRUCTION MEANS, METHODS, TECHNIQUES, SEQUENCES OR PROCEDURES, OR FOR SAFETY PRECAUTIONS AND PROGRAMS IN CONNECTION WITH THE WORK. ALL WORK SHALL BE PERFORMED IN ACCORDANCE WITH APPLICABLE CODES AND ORDINANCES.

REFERENCE DRAWINGS:

REV #	DATE	DESCRIPTION	DRWN	CHKD	APVD
A	12-05-25	ISSUED FOR APPROVAL	GS	APB	PDN

REV #	DATE	DESCRIPTION	DRWN	CHKD	APVD

MOTIVA

CLIENT: MOTIVA ENTERPRISES LLC
PLANT: PORT ARTHUR REFINERY
JOB NO:

PIPING & INSTRUMENTATION DIAGRAM

BATTERY LIMIT DRAWING
PAMC TO BOILER COMPLEX

PROJ TITLE: AROMATICS UTILITY SCOPE REVIEW

SSP ENGINEERING & CONSULTING
13100 NORTHWEST FREEWAY
SUITE 625,
HOUSTON, TEXAS 77040

FIRM NUMBER #13619

PROJECT NO: 25MA02	SCALE: NONE
DRAWN BY: GS	CHECKED: APB
DESIGN BY:	ENG APVL: PDN
DRAWING NO: 0000-PID-0001	REV A

DRAWING: 0000-pid-0001.dwg PLOTTED BY: jason PLOT DATE: ---- DRAWING LOCATION: c:\users\jason\onedrive - engineer's files - 25ma02 - aromatics utility scope cold eyes review\04 - design\04 - process\pids (Border Rev1 5.16.25)

GENERAL NOTES

A. FOR PIPING AND INSTRUMENTATION LEGENDS AND SYMBOLS, SEE P&IDs 0000-PID-0001 THRU 0000-PID-00XX.

B. INSTRUMENT NUMBERS ON THIS P&ID ARE PREFIXED BY THE UNIT NUMBER ASSOCIATED WITH THIS P&ID UNLESS OTHERWISE SPECIFIED.

C. CONTROL VALVES AND BYPASS SIZES ARE PRELIMINARY AND WILL BE CONFIRMED DURING DETAIL DESIGN.

CHECK PRINT

NOT PUBLISHED, ALL RIGHTS RESERVED BY THE ENGINEER. DRAWINGS AND SPECIFICATIONS, AS INSTRUMENTS OF SERVICE, ARE ISSUED TO DESCRIBE DESIGN INTENT. THEY ARE NOT TO BE USED ON OTHER PROJECTS OR EXTENSIONS TO THIS PROJECT, EXCEPT BY AGREEMENT IN WRITING AND WITH APPROPRIATE COMPENSATION TO THE ENGINEER. CONTRACTOR, SUB-CONTRACTORS, & SUPPLIERS ARE RESPONSIBLE FOR CONFIRMING AND CORRELATING DIMENSIONS AND CONDITIONS AT THE JOB SITE, AND SHALL NOTIFY THE ENGINEER IMMEDIATELY OF ANY ERRORS OR DISCREPANCIES IN REGARD TO SUCH DRAWINGS. DESCRIBING DESIGN INTENT, SHALL NOT INDICATE EVERY DETAIL OR SYSTEM FOR CONSTRUCTION. CONTRACTOR, SUB-CONTRACTORS, AND SUPPLIERS SHALL BE RESPONSIBLE TO PROVIDE ADDITIONAL DRAWINGS AS NECESSARY FOR PERMITS, ERECTION, INSTALLATION, AND CO-ORDINATION OF ALL WORK. CONTRACTOR, SUB-CONTRACTORS, AND SUPPLIERS SHALL BE RESPONSIBLE FOR ALL LABOR AND MATERIALS REQUIRED IN ACCORDANCE WITH DESIGN INTENT. ALL MATERIALS SHALL BE NEW, UNLESS SPECIFIED OTHERWISE, AND SHALL BE INSTALLED LEVEL, PLUMB, STRAIGHT, AND TRUE TO LINE, IN ACCORDANCE WITH THE BEST PRACTICES OF THE TRADES. THE ENGINEER SHALL NOT BE RESPONSIBLE FOR CONSTRUCTION MEANS, METHODS, TECHNIQUES, SEQUENCES OR PROCEDURES, OR FOR SAFETY PRECAUTIONS AND PROGRAMS IN CONNECTION WITH THE WORK. ALL WORK SHALL BE PERFORMED IN ACCORDANCE WITH APPLICABLE CODES AND ORDINANCES.

REFERENCE DRAWINGS:

REV #	DATE	DESCRIPTION	DRWN	CHKD	APVD
A	12-05-25	ISSUED FOR APPROVAL	GS	APB	PDN

REV #	DATE	DESCRIPTION	DRWN	CHKD	APVD

MOTIVA

CLIENT: MOTIVA ENTERPRISES LLC
PLANT: PORT ARTHUR REFINERY
JOB NO:

PIPING & INSTRUMENTATION DIAGRAM

BATTERY LIMIT DRAWING
AROMATICS TO BOILER COMPLEX

PROJ TITLE: AROMATICS UTILITY SCOPE REVIEW

SSP ENGINEERING & CONSULTING
13100 NORTHWEST FREEWAY
SUITE 625,
HOUSTON, TEXAS 77040

FIRM NUMBER #13619

PROJECT NO: 25MA02	SCALE: NONE
DRAWN BY: GS	CHECKED: APB
DESIGN BY:	ENG APVL: PDN
DRAWING NO: 0000-PID-0002	REV A

DRAWING: 0000-pid-0002.dwg, PLOTTED BY: jason, PLOT DATE: ----, DRAWING LOCATION: c:\users\jason\onedrive - engineip's files - 25ma02 - aromatics utility scope cold eyes review\04 - design\04 - process\pids, (Border Rev1 5.18.25)

GENERAL NOTES

A. FOR PIPING AND INSTRUMENTATION LEGENDS AND SYMBOLS, SEE P&IDs 0000-PID-0001 THRU 0000-PID-00XX.

B. INSTRUMENT NUMBERS ON THIS P&ID ARE PREFIXED BY THE UNIT NUMBER ASSOCIATED WITH THIS P&ID UNLESS OTHERWISE SPECIFIED.

C. CONTROL VALVES AND BYPASS SIZES ARE PRELIMINARY AND WILL BE CONFIRMED DURING DETAIL DESIGN.

CHECK PRINT

NOT PUBLISHED. ALL RIGHTS RESERVED BY THE ENGINEER. DRAWINGS AND SPECIFICATIONS, AS INSTRUMENTS OF SERVICE, ARE ISSUED TO DESCRIBE DESIGN INTENT. THEY ARE NOT TO BE USED ON OTHER PROJECTS OR EXTENSIONS TO THIS PROJECT, EXCEPT BY AGREEMENT IN WRITING AND WITH APPROPRIATE COMPENSATION TO THE ENGINEER. CONTRACTOR, SUB-CONTRACTORS, & SUPPLIERS ARE RESPONSIBLE FOR CONFIRMING AND CORRELATING DIMENSIONS AND CONDITIONS AT THE JOB SITE, AND SHALL NOTIFY THE ENGINEER IMMEDIATELY OF ANY ERRORS OR DISCREPANCIES IN REGARD TO SUCH. DRAWINGS, DESCRIBING DESIGN INTENT, SHALL NOT INDICATE EVERY DETAIL OR SYSTEM FOR CONSTRUCTION. CONTRACTOR, SUB-CONTRACTORS, AND SUPPLIERS SHALL BE RESPONSIBLE TO PROVIDE ADDITIONAL DRAWINGS AS NECESSARY FOR PERMITS, ERECTION, INSTALLATION, AND CO-ORDINATION OF ALL WORK. CONTRACTOR, SUB-CONTRACTORS, AND SUPPLIERS SHALL BE RESPONSIBLE FOR ALL LABOR AND MATERIALS REQUIRED IN ACCORDANCE WITH DESIGN INTENT. ALL MATERIALS SHALL BE NEW, UNLESS SPECIFIED OTHERWISE, AND SHALL BE INSTALLED LEVEL, PLUMB, STRAIGHT, AND TRUE TO LINE, IN ACCORDANCE WITH THE BEST PRACTICES OF THE TRADES. THE ENGINEER SHALL NOT BE RESPONSIBLE FOR CONSTRUCTION MEANS, METHODS, TECHNIQUES, SEQUENCES OR PROCEDURES, OR FOR SAFETY PRECAUTIONS AND PROGRAMS IN CONNECTION WITH THE WORK. ALL WORK SHALL BE PERFORMED IN ACCORDANCE WITH APPLICABLE CODES AND ORDINANCES.

REFERENCE DRAWINGS:

REV #	DATE	DESCRIPTION	DRWN	CHKD	APVD
A	12-05-25	ISSUED FOR APPROVAL	GS	APB	PDN

REV #	DATE	DESCRIPTION	DRWN	CHKD	APVD

MOTIVA

CLIENT: MOTIVA ENTERPRISES LLC
PLANT: PORT ARTHUR REFINERY
JOB NO:

PIPING & INSTRUMENTATION DIAGRAM

BATTERY LIMIT DRAWING
BOILER COMPLEX TO PAMC

PROJ TITLE: AROMATICS UTILITY SCOPE REVIEW

SSP ENGINEERING & CONSULTING
13100 NORTHWEST FREEWAY
SUITE 625
HOUSTON, TEXAS 77040

FIRM NUMBER #13619

PROJECT NO: 25MA02	SCALE: NONE
DRAWN BY: GS	CHECKED: APB
DESIGN BY:	ENG APVL: PDN
DRAWING NO: 0000-PID-0010	REV A

DRAWING: 0000-pid-0010.dwg PLOTTED BY: jason PLOT DATE: ---- DRAWING LOCATION: c:\users\jason\onedrive - englisp's files - 25ma02 - aromatics utility scope cold eyes review\04 - design\04 - process\pids, (Border Rev1 5.16.25)

GENERAL NOTES

A. FOR PIPING AND INSTRUMENTATION LEGENDS AND SYMBOLS, SEE P&IDs 0000-PID-0001 THRU 0000-PID-00XX.

B. INSTRUMENT NUMBERS ON THIS P&ID ARE PREFIXED BY THE UNIT NUMBER ASSOCIATED WITH THIS P&ID UNLESS OTHERWISE SPECIFIED.

C. CONTROL VALVES AND BYPASS SIZES ARE PRELIMINARY AND WILL BE CONFIRMED DURING DETAIL DESIGN.

CHECK PRINT

NOT PUBLISHED. ALL RIGHTS RESERVED BY THE ENGINEER. DRAWINGS AND SPECIFICATIONS, AS INSTRUMENTS OF SERVICE, ARE ISSUED TO DESCRIBE DESIGN INTENT. THEY ARE NOT TO BE USED ON OTHER PROJECTS OR EXTENSIONS TO THIS PROJECT, EXCEPT BY AGREEMENT IN WRITING AND WITH APPROPRIATE COMPENSATION TO THE ENGINEER. CONTRACTOR, SUB-CONTRACTORS, & SUPPLIERS ARE RESPONSIBLE FOR CONFIRMING AND CORRELATING DIMENSIONS AND CONDITIONS AT THE JOB SITE, AND SHALL NOTIFY THE ENGINEER IMMEDIATELY OF ANY ERRORS OR DISCREPANCIES IN REGARD TO SUCH DRAWINGS, DESCRIBING DESIGN INTENT. SHALL NOT INDICATE EVERY DETAIL OR SYSTEM FOR CONSTRUCTION. CONTRACTOR, SUB-CONTRACTORS, AND SUPPLIERS SHALL BE RESPONSIBLE TO PROVIDE ADDITIONAL DRAWINGS AS NECESSARY FOR PERMITS, ERECTION, INSTALLATION, AND CO-ORDINATION OF ALL WORK. CONTRACTOR, SUB-CONTRACTORS, AND SUPPLIERS SHALL BE RESPONSIBLE FOR ALL LABOR AND MATERIALS REQUIRED IN ACCORDANCE WITH DESIGN INTENT. ALL MATERIALS SHALL BE NEW. UNLESS SPECIFIED OTHERWISE, AND SHALL BE INSTALLED LEVEL, PLUMB, STRAIGHT, AND TRUE TO LINE, IN ACCORDANCE WITH THE BEST PRACTICES OF THE TRADES. THE ENGINEER SHALL NOT BE RESPONSIBLE FOR CONSTRUCTION MEANS, METHODS, TECHNIQUES, SEQUENCES OR PROCEDURES, OR FOR SAFETY PRECAUTIONS AND PROGRAMS IN CONNECTION WITH THE WORK. ALL WORK SHALL BE PERFORMED IN ACCORDANCE WITH APPLICABLE CODES AND ORDINANCES.

REFERENCE DRAWINGS:

REV #	DATE	DESCRIPTION	DRWN	CHKD	APVD
A	12-05-25	ISSUED FOR APPROVAL	GS	APB	PDN

REV #	DATE	DESCRIPTION	DRWN	CHKD	APVD

MOTIVA

CLIENT: MOTIVA ENTERPRISES LLC
PLANT: PORT ARTHUR REFINERY
JOB NO:

PIPING & INSTRUMENTATION DIAGRAM

BATTERY LIMIT DRAWING
BOILER COMPLEX TO AROMATICS

PROJ TITLE: AROMATICS UTILITY SCOPE REVIEW

SSP ENGINEERING & CONSULTING
13100 NORTHWEST FREEWAY
SUITE 625,
HOUSTON, TEXAS 77040

FIRM NUMBER #13619

PROJECT NO: 25MA02	SCALE: NONE
DRAWN BY: GS	CHECKED: APB
DESIGN BY:	ENG APVL: PDN
DRAWING NO: 0000-PID-0011	REV A

DRAWING: 0000-pid-0011.dwg, PLOTTED BY: jason, PLOT DATE: ----, DRAWING LOCATION: c:\users\jason\onedrive - engineer's files - 25ma02 - aromatics utility scope cold eyes review\04 - design\04 - process\pids, (Border Rev1 5.16.25)

GENERAL NOTES

A. FOR PIPING AND INSTRUMENTATION LEGENDS AND SYMBOLS, SEE P&IDs 0000-PID-0001 THRU 0000-PID-00XX.

B. INSTRUMENT NUMBERS ON THIS P&ID ARE PREFIXED BY THE UNIT NUMBER ASSOCIATED WITH THIS P&ID UNLESS OTHERWISE SPECIFIED.

C. CONTROL VALVES AND BYPASS SIZES ARE PRELIMINARY AND WILL BE CONFIRMED DURING DETAIL DESIGN.

CHECK PRINT

NOT PUBLISHED. ALL RIGHTS RESERVED BY THE ENGINEER. DRAWINGS AND SPECIFICATIONS, AS INSTRUMENTS OF SERVICE, ARE ISSUED TO DESCRIBE DESIGN INTENT. THEY ARE NOT TO BE USED ON OTHER PROJECTS OR EXTENSIONS TO THIS PROJECT, EXCEPT BY AGREEMENT IN WRITING AND WITH APPROPRIATE COMPENSATION TO THE ENGINEER. CONTRACTOR, SUB-CONTRACTORS, & SUPPLIERS ARE RESPONSIBLE FOR CONFIRMING AND CORRELATING DIMENSIONS AND CONDITIONS AT THE JOB SITE, AND SHALL NOTIFY THE ENGINEER IMMEDIATELY OF ANY ERRORS OR DISCREPANCIES IN REGARD TO SUCH. DRAWINGS, DESCRIBING DESIGN INTENT, SHALL NOT INDICATE EVERY DETAIL OR SYSTEM FOR CONSTRUCTION. CONTRACTOR, SUB-CONTRACTORS, AND SUPPLIERS SHALL BE RESPONSIBLE TO PROVIDE ADDITIONAL DRAWINGS AS NECESSARY FOR PERMITS, ERECTION, INSTALLATION, AND CO-ORDINATION OF ALL WORK. CONTRACTOR, SUB-CONTRACTORS, AND SUPPLIERS SHALL BE RESPONSIBLE FOR ALL LABOR AND MATERIALS REQUIRED IN ACCORDANCE WITH DESIGN INTENT. ALL MATERIALS SHALL BE NEW, UNLESS SPECIFIED OTHERWISE, AND SHALL BE INSTALLED LEVEL, PLUMB, STRAIGHT, AND TRUE TO LINE, IN ACCORDANCE WITH THE BEST PRACTICES OF THE TRADES. THE ENGINEER SHALL NOT BE RESPONSIBLE FOR CONSTRUCTION MEANS, METHODS, TECHNIQUES, SEQUENCES OR PROCEDURES, OR FOR SAFETY PRECAUTIONS AND PROGRAMS IN CONNECTION WITH THE WORK. ALL WORK SHALL BE PERFORMED IN ACCORDANCE WITH APPLICABLE CODES AND ORDINANCES.

REFERENCE DRAWINGS:

REV #	DATE	DESCRIPTION	DRWN	CHKD	APVD
A	12-05-25	ISSUED FOR APPROVAL	GS	APB	PDN

REV #	DATE	DESCRIPTION	DRWN	CHKD	APVD

MOTIVA

CLIENT: MOTIVA ENTERPRISES LLC
PLANT: PORT ARTHUR REFINERY
JOB NO:

PIPING & INSTRUMENTATION DIAGRAM
COOLING WATER DISTRIBUTION

PROJ TITLE: AROMATICS UTILITY SCOPE REVIEW

SSP ENGINEERING & CONSULTING
13100 NORTHWEST FREEWAY
SUITE 625
HOUSTON, TEXAS 77040

FIRM NUMBER #13619

PROJECT NO: 25MA02	SCALE: NONE
DRAWN BY: GS	CHECKED: APB
DESIGN BY:	ENG APVL: PDN
DRAWING NO: 0000-PID-0020	REV A

DRAWING: 0000-pid-0020.dwg PLOTTED BY: jason PLOT DATE: ---- DRAWING LOCATION: c:\users\jason\onedrive - englisp's files - 25ma02 - aromatics utility scope cold eyes review\04 - design\04 - process\pids, (Border Rev1 5.16.25)

GENERAL NOTES

A. FOR PIPING AND INSTRUMENTATION LEGENDS AND SYMBOLS, SEE P&IDs 0000-PID-0001 THRU 0000-PID-00XX.

B. INSTRUMENT NUMBERS ON THIS P&ID ARE PREFIXED BY THE UNIT NUMBER ASSOCIATED WITH THIS P&ID UNLESS OTHERWISE SPECIFIED.

C. CONTROL VALVES AND BYPASS SIZES ARE PRELIMINARY AND WILL BE CONFIRMED DURING DETAIL DESIGN.

CHECK PRINT

NOT PUBLISHED. ALL RIGHTS RESERVED BY THE ENGINEER. DRAWINGS AND SPECIFICATIONS, AS INSTRUMENTS OF SERVICE, ARE ISSUED TO DESCRIBE DESIGN INTENT. THEY ARE NOT TO BE USED ON OTHER PROJECTS OR EXTENSIONS TO THIS PROJECT, EXCEPT BY AGREEMENT IN WRITING AND WITH APPROPRIATE COMPENSATION TO THE ENGINEER. CONTRACTOR, SUB-CONTRACTORS, & SUPPLIERS ARE RESPONSIBLE FOR CONFIRMING AND CORRELATING DIMENSIONS AND CONDITIONS AT THE JOB SITE, AND SHALL NOTIFY THE ENGINEER IMMEDIATELY OF ANY ERRORS OR DISCREPANCIES IN REGARD TO SUCH. DRAWINGS, DESCRIBING DESIGN INTENT, SHALL NOT INDICATE EVERY DETAIL OR SYSTEM FOR CONSTRUCTION. CONTRACTOR, SUB-CONTRACTORS, AND SUPPLIERS SHALL BE RESPONSIBLE TO PROVIDE ADDITIONAL DRAWINGS AS NECESSARY FOR PERMITS, ERECTION, INSTALLATION, AND CO-ORDINATION OF ALL WORK. CONTRACTOR, SUB-CONTRACTORS, AND SUPPLIERS SHALL BE RESPONSIBLE FOR ALL LABOR AND MATERIALS REQUIRED IN ACCORDANCE WITH DESIGN INTENT. ALL MATERIALS SHALL BE NEW, UNLESS SPECIFIED OTHERWISE, AND SHALL BE INSTALLED LEVEL, PLUMB, STRAIGHT, AND TRUE TO LINE, IN ACCORDANCE WITH THE BEST PRACTICES OF THE TRADES. THE ENGINEER SHALL NOT BE RESPONSIBLE FOR CONSTRUCTION MEANS, METHODS, TECHNIQUES, SEQUENCES OR PROCEDURES, OR FOR SAFETY PRECAUTIONS AND PROGRAMS IN CONNECTION WITH THE WORK. ALL WORK SHALL BE PERFORMED IN ACCORDANCE WITH APPLICABLE CODES AND ORDINANCES.

REFERENCE DRAWINGS:

REV #	DATE	DESCRIPTION	DRWN	CHKD	APVD
A	12-05-25	ISSUED FOR APPROVAL	GS	APB	PDN

REV #	DATE	DESCRIPTION	DRWN	CHKD	APVD

MOTIVA

CLIENT: MOTIVA ENTERPRISES LLC
PLANT: PORT ARTHUR REFINERY
JOB NO:

PIPING & INSTRUMENTATION DIAGRAM

NITROGEN DISTRIBUTION

PROJ TITLE: AROMATICS UTILITY SCOPE REVIEW

SSP ENGINEERING & CONSULTING
13100 NORTHWEST FREEWAY
SUITE 625,
HOUSTON, TEXAS 77040

FIRM NUMBER #13619

PROJECT NO: 25MA02	SCALE: NONE
DRAWN BY: GS	CHECKED: APB
DESIGN BY:	ENG APVL: PDN
DRAWING NO: 0000-PID-0030	REV A

DRAWING: 0000-pid-0030.dwg, PLOTTED BY: jason, PLOT DATE: ----, DRAWING LOCATION: c:\users\jason\onedrive - engineap's files - 25ma02 - aromatics utility scope cold eyes review\04 - design\04 - process\pids, (Border Rev1 5.16.25)

GENERAL NOTES

A. FOR PIPING AND INSTRUMENTATION LEGENDS AND SYMBOLS, SEE P&IDs 0000-PID-0001 THRU 0000-PID-00XX.

B. INSTRUMENT NUMBERS ON THIS P&ID ARE PREFIXED BY THE UNIT NUMBER ASSOCIATED WITH THIS P&ID UNLESS OTHERWISE SPECIFIED.

C. CONTROL VALVES AND BYPASS SIZES ARE PRELIMINARY AND WILL BE CONFIRMED DURING DETAIL DESIGN.

CHECK PRINT

NOT PUBLISHED. ALL RIGHTS RESERVED BY THE ENGINEER. DRAWINGS AND SPECIFICATIONS, AS INSTRUMENTS OF SERVICE, ARE ISSUED TO DESCRIBE DESIGN INTENT. THEY ARE NOT TO BE USED ON OTHER PROJECTS OR EXTENSIONS TO THIS PROJECT, EXCEPT BY AGREEMENT IN WRITING AND WITH APPROPRIATE COMPENSATION TO THE ENGINEER. CONTRACTOR, SUB-CONTRACTORS, & SUPPLIERS ARE RESPONSIBLE FOR CONFIRMING AND CORRELATING DIMENSIONS AND CONDITIONS AT THE JOB SITE, AND SHALL NOTIFY THE ENGINEER IMMEDIATELY OF ANY ERRORS OR DISCREPANCIES IN REGARD TO SUCH DRAWINGS. DESCRIBING DESIGN INTENT, SHALL NOT INDICATE EVERY DETAIL OR SYSTEM FOR CONSTRUCTION. CONTRACTOR, SUB-CONTRACTORS, AND SUPPLIERS SHALL BE RESPONSIBLE TO PROVIDE ADDITIONAL DRAWINGS AS NECESSARY FOR PERMITS, ERECTION, INSTALLATION, AND CO-ORDINATION OF ALL WORK. CONTRACTOR, SUB-CONTRACTORS, AND SUPPLIERS SHALL BE RESPONSIBLE FOR ALL LABOR AND MATERIALS REQUIRED IN ACCORDANCE WITH DESIGN INTENT. ALL MATERIALS SHALL BE NEW, UNLESS SPECIFIED OTHERWISE, AND SHALL BE INSTALLED LEVEL, PLUMB, STRAIGHT, AND TRUE TO LINE, IN ACCORDANCE WITH THE BEST PRACTICES OF THE TRADES. THE ENGINEER SHALL NOT BE RESPONSIBLE FOR CONSTRUCTION MEANS, METHODS, TECHNIQUES, SEQUENCES OR PROCEDURES, OR FOR SAFETY PRECAUTIONS AND PROGRAMS IN CONNECTION WITH THE WORK. ALL WORK SHALL BE PERFORMED IN ACCORDANCE WITH APPLICABLE CODES AND ORDINANCES.

REFERENCE DRAWINGS:

REV #	DATE	DESCRIPTION	DRWN	CHKD	APVD
A	12-05-25	ISSUED FOR APPROVAL	GS	APB	PDN

REV #	DATE	DESCRIPTION	DRWN	CHKD	APVD

MOTIVA

CLIENT: MOTIVA ENTERPRISES LLC
PLANT: PORT ARTHUR REFINERY
JOB NO:

PIPING & INSTRUMENTATION DIAGRAM

INSTRUMENT AIR DISTRIBUTION

PROJ TITLE: AROMATICS UTILITY SCOPE REVIEW

SSP ENGINEERING & CONSULTING
13100 NORTHWEST FREEWAY
SUITE 625,
HOUSTON, TEXAS 77040

FIRM NUMBER #13619

PROJECT NO: 25MA02	SCALE: NONE
DRAWN BY: GS	CHECKED: APB
DESIGN BY:	ENG APVL: PDN
DRAWING NO: 0000-PID-0040	REV A

DRAWING: 0000-pid-0040.dwg PLOTTED BY: jason PLOT DATE: ---- DRAWING LOCATION: c:\users\jasonriomedrive - englasp's files - 25ma02 - aromatics utility scope cold eyes review\04 - design\04 - process\pids (Border Rev1 5.16.25)

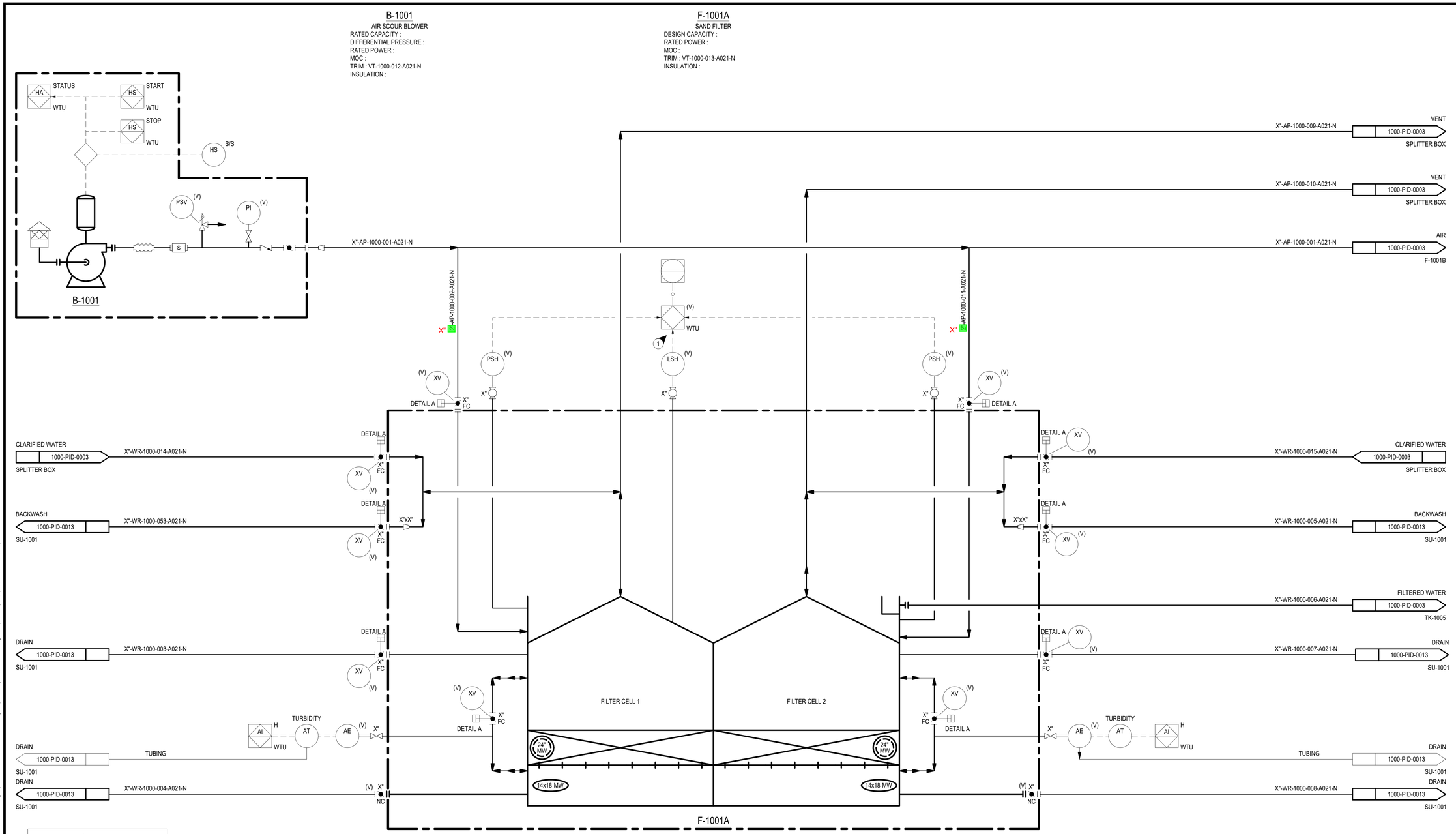

GENERAL NOTES

A. FOR PIPING AND INSTRUMENTATION LEGENDS AND SYMBOLS, SEE P&IDs 0000-PID-0001 THRU 0000-PID-00XX.

B. INSTRUMENT NUMBERS ON THIS P&ID ARE PREFIXED BY THE UNIT NUMBER ASSOCIATED WITH THIS P&ID UNLESS OTHERWISE SPECIFIED.

C. CONTROL VALVES AND BYPASS SIZES ARE PRELIMINARY AND WILL BE CONFIRMED DURING DETAIL DESIGN.

NOTES

1. FILTER CONTROL LOGIC BOX ORIGINATES ON P&ID 1000-PID-0003. THE BOX SHOWN ON THIS P&ID REPRESENTS THE SAME BOX.
2. FILTER CONFIGURATION IS TYPICAL. DRAWING TO BE REVISED WHEN FILTRATION SYSTEM IS SELECTED.

CHECK PRINT

NOT PUBLISHED, ALL RIGHTS RESERVED BY THE ENGINEER. DRAWINGS AND SPECIFICATIONS, AS INSTRUMENTS OF SERVICE, ARE ISSUED TO DESCRIBE DESIGN INTENT. THEY ARE NOT TO BE USED ON OTHER PROJECTS OR EXTENSIONS TO THIS PROJECT, EXCEPT BY AGREEMENT IN WRITING AND WITH APPROPRIATE COMPENSATION TO THE ENGINEER. CONTRACTOR, SUB-CONTRACTORS, & SUPPLIERS ARE RESPONSIBLE FOR CONFIRMING AND CORRELATING DIMENSIONS AND CONDITIONS AT THE JOB SITE, AND SHALL NOTIFY THE ENGINEER IMMEDIATELY OF ANY ERRORS OR DISCREPANCIES IN REGARD TO SUCH. DRAWINGS, DESCRIBING DESIGN INTENT, SHALL NOT INDICATE EVERY DETAIL OR SYSTEM FOR CONSTRUCTION. CONTRACTOR, SUB-CONTRACTORS, AND SUPPLIERS SHALL BE RESPONSIBLE TO PROVIDE ADDITIONAL DRAWINGS AS NECESSARY FOR PERMITS, ERECTION, INSTALLATION, AND CO-ORDINATION OF ALL WORK. CONTRACTOR, SUB-CONTRACTORS, AND SUPPLIERS SHALL BE RESPONSIBLE FOR ALL LABOR AND MATERIALS REQUIRED IN ACCORDANCE WITH DESIGN INTENT. ALL MATERIALS SHALL BE NEW, UNLESS SPECIFIED OTHERWISE, AND SHALL BE INSTALLED LEVEL, PLUMB, STRAIGHT, AND TRUE TO LINE, IN ACCORDANCE WITH THE BEST PRACTICES OF THE TRADES. THE ENGINEER SHALL NOT BE RESPONSIBLE FOR CONSTRUCTION MEANS, METHODS, TECHNIQUES, SEQUENCES OR PROCEDURES, OR FOR SAFETY PRECAUTIONS AND PROGRAMS IN CONNECTION WITH THE WORK. ALL WORK SHALL BE PERFORMED IN ACCORDANCE WITH APPLICABLE CODES AND ORDINANCES.

REFERENCE DRAWINGS:

REV #	DATE	DESCRIPTION	DRWN	CHKD	APVD
A	12-05-25	ISSUED FOR APPROVAL	GS	DLH	PDN

REV #	DATE	DESCRIPTION	DRWN	CHKD	APVD

MOTIVA

CLIENT: MOTIVA ENTERPRISES LLC
PLANT: PORT ARTHUR REFINERY
JOB NO:

PIPING & INSTRUMENTATION DIAGRAM

SAND FILTER A

PROJ TITLE: AROMATICS UTILITY SCOPE REVIEW

SSP ENGINEERING & CONSULTING
13100 NORTHWEST FREEWAY
SUITE 625,
HOUSTON, TEXAS 77040

FIRM NUMBER #13619

PROJECT NO: 25MA02	SCALE: NONE
DRAWN BY: GS	CHECKED: APB
DESIGN BY:	ENG APVL: PDN
DRAWING NO: 1000-PID-0001	REV A

DRAWING: 1000-pid-0001.dwg PLOTTED BY: jason PLOT DATE: ---- DRAWING LOCATION: c:\users\jason\onedrive - engineap's files - 25ma02 - aromatics utility scope cold eyes review\04 - design\04 - process\pids, (Border Rev1 5.16.25)

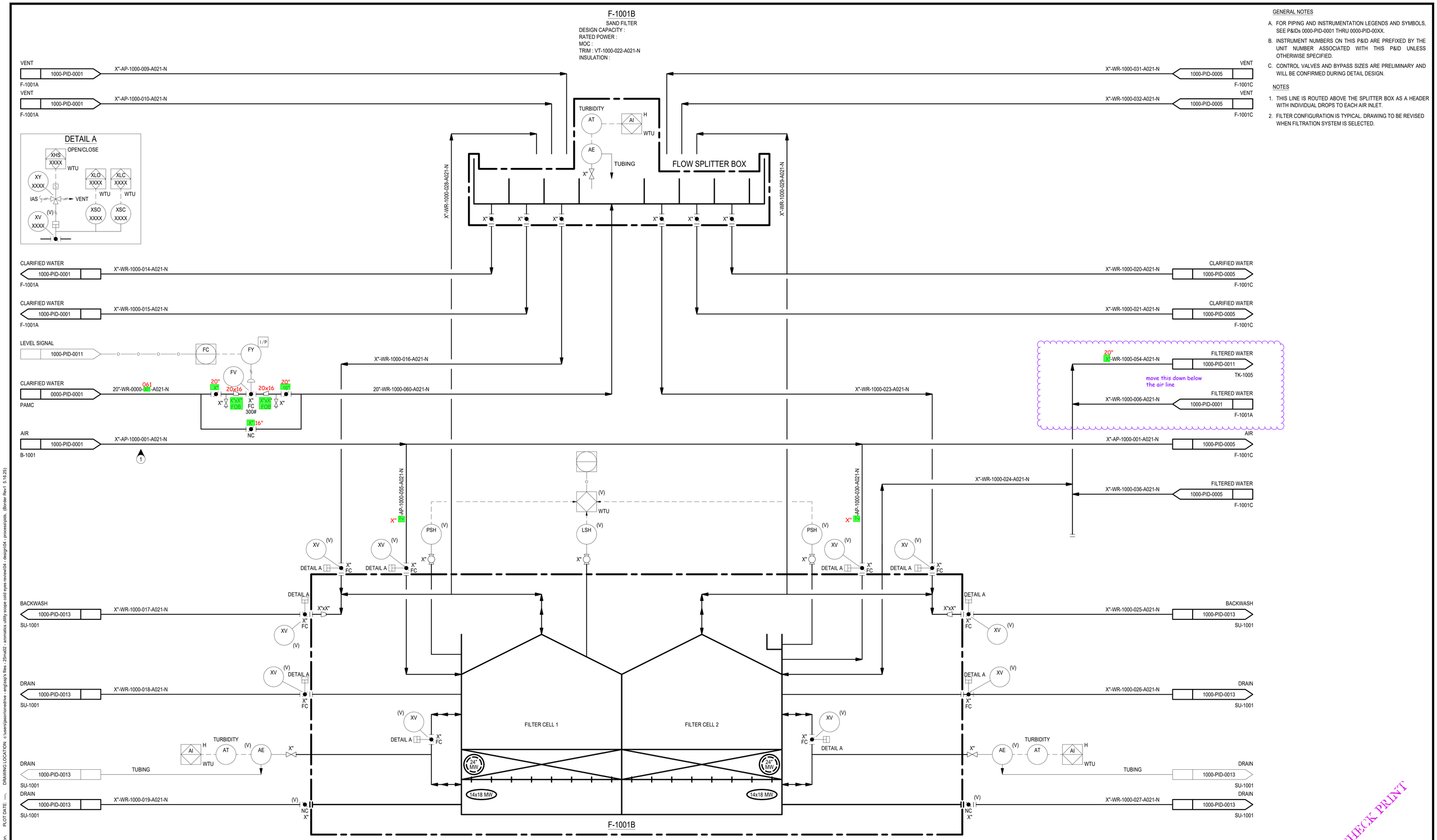

GENERAL NOTES

A. FOR PIPING AND INSTRUMENTATION LEGENDS AND SYMBOLS, SEE P&IDs 0000-PID-0001 THRU 0000-PID-00XX.

B. INSTRUMENT NUMBERS ON THIS P&ID ARE PREFIXED BY THE UNIT NUMBER ASSOCIATED WITH THIS P&ID UNLESS OTHERWISE SPECIFIED.

C. CONTROL VALVES AND BYPASS SIZES ARE PRELIMINARY AND WILL BE CONFIRMED DURING DETAIL DESIGN.

NOTES

1. THIS LINE IS ROUTED ABOVE THE SPLITTER BOX AS A HEADER WITH INDIVIDUAL DROPS TO EACH AIR INLET.
2. FILTER CONFIGURATION IS TYPICAL. DRAWING TO BE REVISED WHEN FILTRATION SYSTEM IS SELECTED.

CHECK PRINT

NOT PUBLISHED. ALL RIGHTS RESERVED BY THE ENGINEER. DRAWINGS AND SPECIFICATIONS, AS INSTRUMENTS OF SERVICE, ARE ISSUED TO DESCRIBE DESIGN INTENT. THEY ARE NOT TO BE USED ON OTHER PROJECTS OR EXTENSIONS TO THIS PROJECT, EXCEPT BY AGREEMENT IN WRITING AND WITH APPROPRIATE COMPENSATION TO THE ENGINEER. CONTRACTOR, SUB-CONTRACTORS, & SUPPLIERS ARE RESPONSIBLE FOR CONFIRMING AND CORRELATING DIMENSIONS AND CONDITIONS AT THE JOB SITE, AND SHALL NOTIFY THE ENGINEER IMMEDIATELY OF ANY ERRORS OR DISCREPANCIES IN REGARD TO SUCH. DRAWINGS, DESCRIBING DESIGN INTENT, SHALL NOT INDICATE EVERY DETAIL OR SYSTEM FOR CONSTRUCTION. CONTRACTOR, SUB-CONTRACTORS, AND SUPPLIERS SHALL BE RESPONSIBLE TO PROVIDE ADDITIONAL DRAWINGS AS NECESSARY FOR PERMITS, ERECTION, INSTALLATION, AND CO-ORDINATION OF ALL WORK. CONTRACTOR, SUB-CONTRACTORS, AND SUPPLIERS SHALL BE RESPONSIBLE FOR ALL LABOR AND MATERIALS REQUIRED IN ACCORDANCE WITH DESIGN INTENT. ALL MATERIALS SHALL BE NEW. UNLESS SPECIFIED OTHERWISE, AND SHALL BE INSTALLED LEVEL, PLUMB, STRAIGHT, AND TRUE TO LINE, IN ACCORDANCE WITH THE BEST PRACTICES OF THE TRADES. THE ENGINEER SHALL NOT BE RESPONSIBLE FOR CONSTRUCTION MEANS, METHODS, TECHNIQUES, SEQUENCES OR PROCEDURES, OR FOR SAFETY PRECAUTIONS AND PROGRAMS IN CONNECTION WITH THE WORK. ALL WORK SHALL BE PERFORMED IN ACCORDANCE WITH APPLICABLE CODES AND ORDINANCES.

REFERENCE DRAWINGS:

REV #	DATE	DESCRIPTION	DRWN	CHKD	APVD
A	12-05-25	ISSUED FOR APPROVAL	GS	DLH	PDN

REV #	DATE	DESCRIPTION	DRWN	CHKD	APVD

MOTIVA

CLIENT: MOTIVA ENTERPRISES LLC
PLANT: PORT ARTHUR REFINERY
JOB NO:

PIPING & INSTRUMENTATION DIAGRAM
SAND FILTER B

PROJ TITLE: AROMATICS UTILITY SCOPE REVIEW

SSP ENGINEERING & CONSULTING
13100 NORTHWEST FREEWAY
SUITE 625,
HOUSTON, TEXAS 77040

FIRM NUMBER #13619

PROJECT NO: 25MA02	SCALE: NONE
DRAWN BY: GS	CHECKED: APB
DESIGN BY:	ENG APVL: PDN
DRAWING NO: 1000-PID-0003	REV A

DRAWING: 1000-pid-0003.dwg PLOTTED BY: jason PLOT DATE: ---- DRAWING LOCATION: c:\users\jason\onedrive - engineap's files - 25ma02 - aromatics utility scope cold eyes review\04 - design\04 - process\pids (Border Rev1 5.16.25)

F-1001C
SAND FILTER
DESIGN CAPACITY :
RATED POWER :
MOC :
TRIM : VT-1000-042-A021-N
INSULATION :

GENERAL NOTES

A. FOR PIPING AND INSTRUMENTATION LEGENDS AND SYMBOLS, SEE P&IDs 0000-PID-0001 THRU 0000-PID-00XX.

B. INSTRUMENT NUMBERS ON THIS P&ID ARE PREFIXED BY THE UNIT NUMBER ASSOCIATED WITH THIS P&ID UNLESS OTHERWISE SPECIFIED.

C. CONTROL VALVES AND BYPASS SIZES ARE PRELIMINARY AND WILL BE CONFIRMED DURING DETAIL DESIGN.

NOTES

1. FILTER CONTROL LOGIC BOX ORIGINATES ON P&ID 1000-PID-0003. THE BOX SHOWN ON THIS P&ID REPRESENTS THE SAME BOX.
2. FILTER CONFIGURATION IS TYPICAL. DRAWING TO BE REVISED WHEN FILTRATION SYSTEM IS SELECTED.

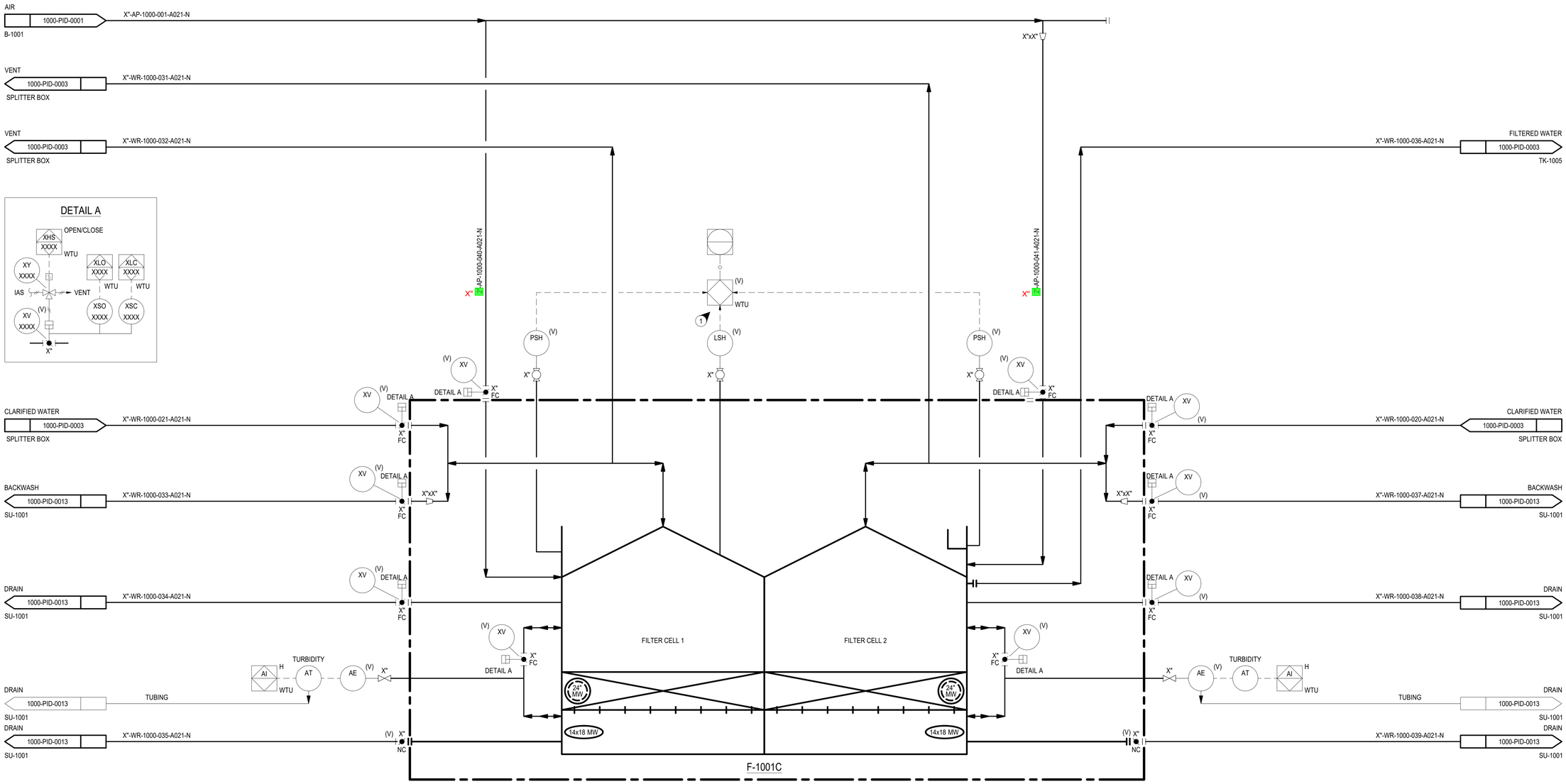

CHECK PRINT

NOT PUBLISHED, ALL RIGHTS RESERVED BY THE ENGINEER. DRAWINGS AND SPECIFICATIONS, AS INSTRUMENTS OF SERVICE, ARE ISSUED TO DESCRIBE DESIGN INTENT. THEY ARE NOT TO BE USED ON OTHER PROJECTS OR EXTENSIONS TO THIS PROJECT, EXCEPT BY AGREEMENT IN WRITING AND WITH APPROPRIATE COMPENSATION TO THE ENGINEER. CONTRACTOR, SUB-CONTRACTORS, & SUPPLIERS ARE RESPONSIBLE FOR CONFIRMING AND CORRELATING DIMENSIONS AND CONDITIONS AT THE JOB SITE, AND SHALL NOTIFY THE ENGINEER IMMEDIATELY OF ANY ERRORS OR DISCREPANCIES IN REGARD TO SUCH DRAWINGS, DESCRIBING DESIGN INTENT. SHALL NOT INDICATE EVERY DETAIL OR SYSTEM FOR CONSTRUCTION. CONTRACTOR, SUB-CONTRACTORS, AND SUPPLIERS SHALL BE RESPONSIBLE TO PROVIDE ADDITIONAL DRAWINGS AS NECESSARY FOR PERMITS, ERECTION, INSTALLATION, AND CO-ORDINATION OF ALL WORK. CONTRACTOR, SUB-CONTRACTORS, AND SUPPLIERS SHALL BE RESPONSIBLE FOR ALL LABOR AND MATERIALS REQUIRED IN ACCORDANCE WITH DESIGN INTENT. ALL MATERIALS SHALL BE NEW, UNLESS SPECIFIED OTHERWISE, AND SHALL BE INSTALLED LEVEL, PLUMB, STRAIGHT, AND TRUE TO LINE, IN ACCORDANCE WITH THE BEST PRACTICES OF THE TRADES. THE ENGINEER SHALL NOT BE RESPONSIBLE FOR CONSTRUCTION MEANS, METHODS, TECHNIQUES, SEQUENCES OR PROCEDURES, OR FOR SAFETY PRECAUTIONS AND PROGRAMS IN CONNECTION WITH THE WORK. ALL WORK SHALL BE PERFORMED IN ACCORDANCE WITH APPLICABLE CODES AND ORDINANCES.

REFERENCE DRAWINGS:

REV #	DATE	DESCRIPTION	DRWN	CHKD	APVD
A	12-05-25	ISSUED FOR APPROVAL	GS	DLH	PDN

REV #	DATE	DESCRIPTION	DRWN	CHKD	APVD

MOTIVA

CLIENT: MOTIVA ENTERPRISES LLC
PLANT: PORT ARTHUR REFINERY
JOB NO:

PIPING & INSTRUMENTATION DIAGRAM
SAND FILTER C

PROJ TITLE: AROMATICS UTILITY SCOPE REVIEW

SSP ENGINEERING & CONSULTING
13100 NORTHWEST FREEWAY
SUITE 625,
HOUSTON, TEXAS 77040

FIRM NUMBER #13619

PROJECT NO: 25MA02	SCALE: NONE
DRAWN BY: GS	CHECKED: APB
DESIGN BY:	ENG APVL: PDN
DRAWING NO: 1000-PID-0005	REV A

DRAWING: 1000-pid-0005.dwg PLOTTED BY: jason PLOT DATE: ---- DRAWING LOCATION: c:\users\jason\onedrive - engineer's files - 25ma02 - aromatics utility scope cold eyes review\04 - design\04 - process\pids (Border Rev1 5.16.25)

TK-1005

REPRESSURIZATION TANK
SIZE ID x HEIGHT :
TOTAL VOLUME :
DESIGN PRESSURE :
DESIGN TEMP :
MOC :
TRIM : VT-1000-051-A021-N
INSULATION / TRACING :

P-1005A/B

FILTERED WATER PUMPS
RATED CAPACITY :
DIFFERENTIAL PRESSURE :
RATED POWER :
MOC (CASING / INTERNAL) :
INSULATION / TRACING :
TRIM : VT-1000-052-A021-N
SEAL PLAN :

GENERAL NOTES

A. FOR PIPING AND INSTRUMENTATION LEGENDS AND SYMBOLS, SEE P&IDs 0000-PID-0001 THRU 0000-PID-00XX.
B. INSTRUMENT NUMBERS ON THIS P&ID ARE PREFIXED BY THE UNIT NUMBER ASSOCIATED WITH THIS P&ID UNLESS OTHERWISE SPECIFIED.
C. CONTROL VALVES AND BYPASS SIZES ARE PRELIMINARY AND WILL BE CONFIRMED DURING DETAIL DESIGN.

NOTES

1. ORIFICE PLATE IS FLOW CONDITIONING ORIFICE, WHICH REQUIRES 2 DIAMETERS STRAIGHT RUN UPSTREAM AND DOWNSTREAM.

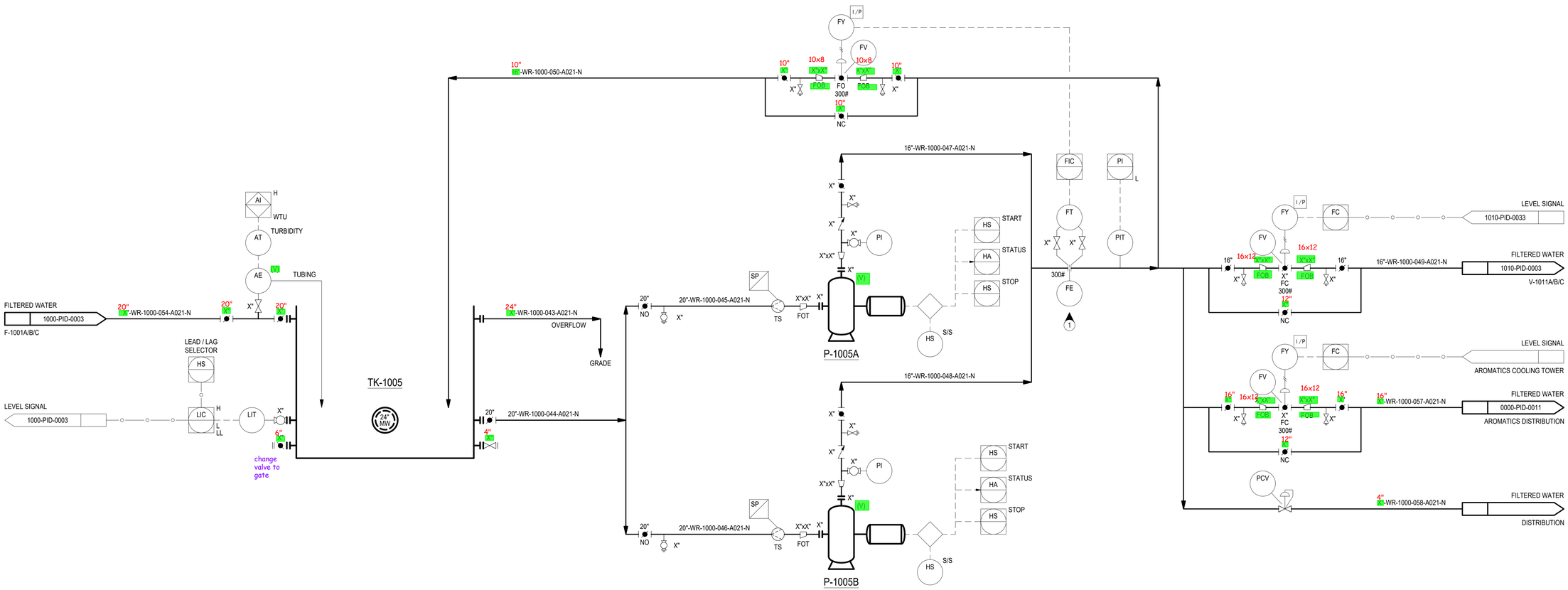

CHECK PRINT

NOT PUBLISHED, ALL RIGHTS RESERVED BY THE ENGINEER. DRAWINGS AND SPECIFICATIONS, AS INSTRUMENTS OF SERVICE, ARE ISSUED TO DESCRIBE DESIGN INTENT. THEY ARE NOT TO BE USED ON OTHER PROJECTS OR EXTENSIONS TO THIS PROJECT, EXCEPT BY AGREEMENT IN WRITING AND WITH APPROPRIATE COMPENSATION TO THE ENGINEER. CONTRACTOR, SUB-CONTRACTORS, & SUPPLIERS ARE RESPONSIBLE FOR CONFIRMING AND CORRELATING DIMENSIONS AND CONDITIONS AT THE JOB SITE, AND SHALL NOTIFY THE ENGINEER IMMEDIATELY OF ANY ERRORS OR DISCREPANCIES IN REGARD TO SUCH. DRAWINGS, DESCRIBING DESIGN INTENT, SHALL NOT INDICATE EVERY DETAIL OR SYSTEM FOR CONSTRUCTION. CONTRACTOR, SUB-CONTRACTORS, AND SUPPLIERS SHALL BE RESPONSIBLE TO PROVIDE ADDITIONAL DRAWINGS AS NECESSARY FOR PERMITS, ERECTION, INSTALLATION, AND CO-ORDINATION OF ALL WORK. CONTRACTOR, SUB-CONTRACTORS, AND SUPPLIERS SHALL BE RESPONSIBLE FOR ALL LABOR AND MATERIALS REQUIRED IN ACCORDANCE WITH DESIGN INTENT. ALL MATERIALS SHALL BE NEW, UNLESS SPECIFIED OTHERWISE, AND SHALL BE INSTALLED LEVEL, PLUMB, STRAIGHT, AND TRUE TO LINE, IN ACCORDANCE WITH THE BEST PRACTICES OF THE TRADES. THE ENGINEER SHALL NOT BE RESPONSIBLE FOR CONSTRUCTION MEANS, METHODS, TECHNIQUES, SEQUENCES OR PROCEDURES, OR FOR SAFETY PRECAUTIONS AND PROGRAMS IN CONNECTION WITH THE WORK. ALL WORK SHALL BE PERFORMED IN ACCORDANCE WITH APPLICABLE CODES AND ORDINANCES.

REFERENCE DRAWINGS:

REV #	DATE	DESCRIPTION	DRWN	CHKD	APVD
A	12-05-25	ISSUED FOR APPROVAL	GS	DLH	PDN

REV #	DATE	DESCRIPTION	DRWN	CHKD	APVD

MOTIVA

CLIENT: MOTIVA ENTERPRISES LLC
PLANT: PORT ARTHUR REFINERY
JOB NO:

PROCESS FLOW DIAGRAM
PIPING & INSTRUMENTATION DIAGRAM
SUPERNATANT SUMP

PROJ TITLE: AROMATICS UTILITY SCOPE REVIEW

SSP ENGINEERING & CONSULTING
13100 NORTHWEST FREEWAY
SUITE 625,
HOUSTON, TEXAS 77040

FIRM NUMBER #13619

PROJECT NO: 25MA02	SCALE: NONE
DRAWN BY: GS	CHECKED: APB
DESIGN BY:	ENG APVL: PDN
DRAWING NO: 1000-PID-0011	REV A

DRAWING: 1000-pid-0011.dwg PLOTTED BY: jason PLOT DATE: ---- DRAWING LOCATION: c:\users\jason\onedrive - engineip's files - 25ma02 - aromatics utility scope cold eyes review\04 - design\04 - process\pids (Border Rev1 5.16.25)

SU-1001

SUPERNATANT SUMP

SIZE :
WORKING CAPACITY :
INTERNALS :
MOC :
TRIM : VT-1000-056-A021-N

GENERAL NOTES

A. FOR PIPING AND INSTRUMENTATION LEGENDS AND SYMBOLS, SEE P&IDs 0000-PID-0001 THRU 0000-PID-00XX.
B. INSTRUMENT NUMBERS ON THIS P&ID ARE PREFIXED BY THE UNIT NUMBER ASSOCIATED WITH THIS P&ID UNLESS OTHERWISE SPECIFIED.
C. CONTROL VALVES AND BYPASS SIZES ARE PRELIMINARY AND WILL BE CONFIRMED DURING DETAIL DESIGN.

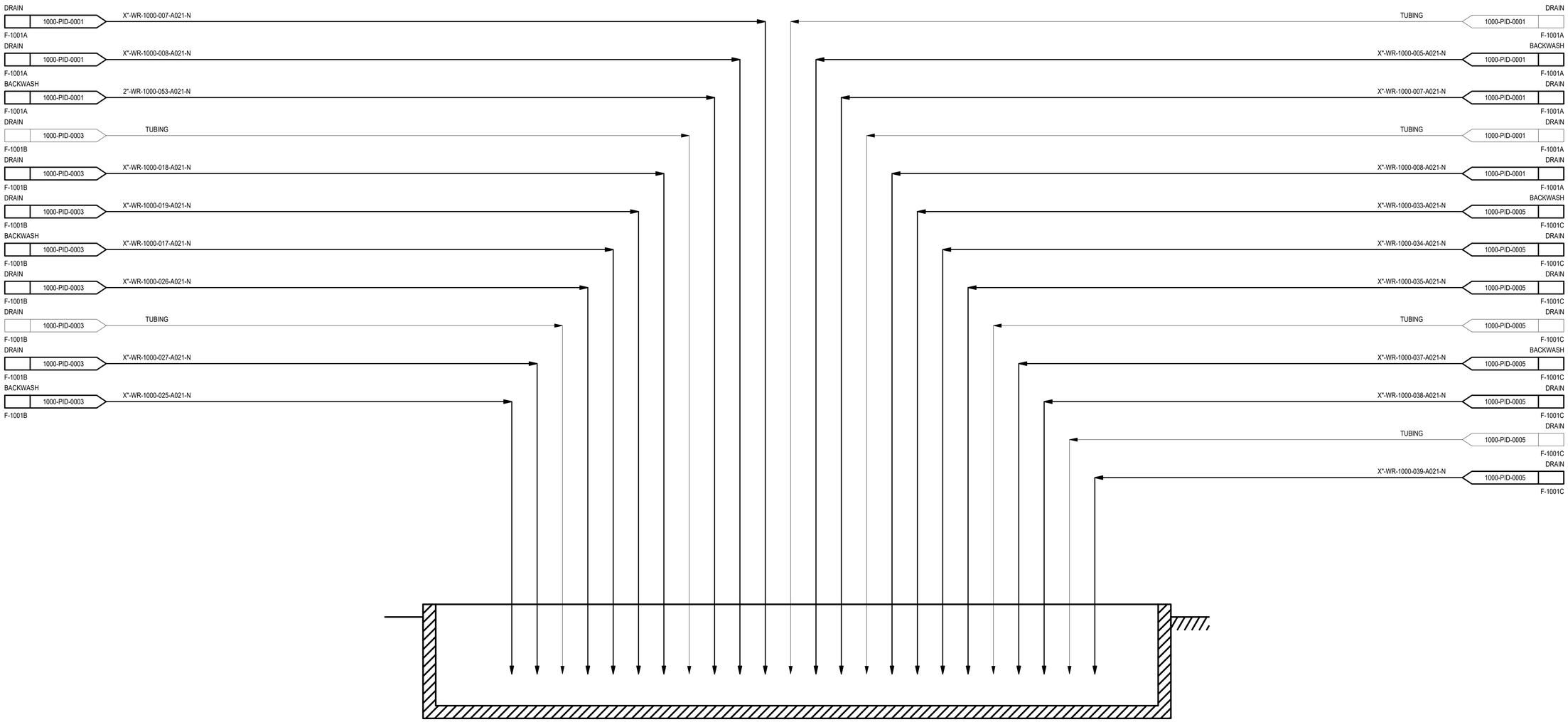

CHECK PRINT

NOT PUBLISHED, ALL RIGHTS RESERVED BY THE ENGINEER. DRAWINGS AND SPECIFICATIONS, AS INSTRUMENTS OF SERVICE, ARE ISSUED TO DESCRIBE DESIGN INTENT. THEY ARE NOT TO BE USED ON OTHER PROJECTS OR EXTENSIONS TO THIS PROJECT, EXCEPT BY AGREEMENT IN WRITING AND WITH APPROPRIATE COMPENSATION TO THE ENGINEER. CONTRACTOR, SUB-CONTRACTORS, & SUPPLIERS ARE RESPONSIBLE FOR CONFIRMING AND CORRELATING DIMENSIONS AND CONDITIONS AT THE JOB SITE, AND SHALL NOTIFY THE ENGINEER IMMEDIATELY OF ANY ERRORS OR DISCREPANCIES IN REGARD TO SUCH DRAWINGS, DESCRIBING DESIGN INTENT, SHALL NOT INDICATE EVERY DETAIL OR SYSTEM FOR CONSTRUCTION. CONTRACTOR, SUB-CONTRACTORS, AND SUPPLIERS SHALL BE RESPONSIBLE TO PROVIDE ADDITIONAL DRAWINGS AS NECESSARY FOR PERMITS, ERECTION, INSTALLATION, AND CO-ORDINATION OF ALL WORK. CONTRACTOR, SUB-CONTRACTORS, AND SUPPLIERS SHALL BE RESPONSIBLE FOR ALL LABOR AND MATERIALS REQUIRED IN ACCORDANCE WITH DESIGN INTENT. ALL MATERIALS SHALL BE NEW, UNLESS SPECIFIED OTHERWISE, AND SHALL BE INSTALLED LEVEL, PLUMB, STRAIGHT, AND TRUE TO LINE, IN ACCORDANCE WITH THE BEST PRACTICES OF THE TRADES. THE ENGINEER SHALL NOT BE RESPONSIBLE FOR CONSTRUCTION MEANS, METHODS, TECHNIQUES, SEQUENCES OR PROCEDURES, OR FOR SAFETY PRECAUTIONS AND PROGRAMS IN CONNECTION WITH THE WORK. ALL WORK SHALL BE PERFORMED IN ACCORDANCE WITH APPLICABLE CODES AND ORDINANCES.

REFERENCE DRAWINGS:

REV #	DATE	DESCRIPTION	DRWN	CHKD	APVD
A	12-05-25	ISSUED FOR APPROVAL	GS	DLH	PDN

REV #	DATE	DESCRIPTION	DRWN	CHKD	APVD

MOTIVA

CLIENT: MOTIVA ENTERPRISES LLC
PLANT: PORT ARTHUR REFINERY
JOB NO:

PROCESS FLOW DIAGRAM
PIPING & INSTRUMENTATION DIAGRAM
SUPERNATANT SUMP

PROJ TITLE: AROMATICS UTILITY SCOPE REVIEW

SSP ENGINEERING & CONSULTING
13100 NORTHWEST FREEWAY
SUITE 625,
HOUSTON, TEXAS 77040

FIRM NUMBER #13619

PROJECT NO: 25MA02	SCALE: NONE
DRAWN BY: GS	CHECKED: APB
DESIGN BY:	ENG APVL: PDN
DRAWING NO: 1000-PID-0013	REV A

DRAWING: 1000-pid-0013.dwg PLOTTED BY: jason. PLOT DATE: ---- DRAWING LOCATION: c:\users\jason\onedrive - engineja's files - 25ma02 - aromatics utility scope cold eyes review\04 - design\04 - process\pids, (Border Rev1 5.16.25)

TT-1002

SODIUM BISULFITE STACKED TOTE
SIZE ID x HEIGHT :
TOTAL VOLUME :
DESIGN PRESSURE :
DESIGN TEMP :
MOC :
TRIM : VT-1010-014-A130-N
INSULATION / TRACING :

P-1002A/B

SODIUM BISULFITE PUMPS
RATED CAPACITY :
DIFFERENTIAL PRESSURE :
RATED POWER :
MOC (CASING / INTERNAL) :
INSULATION / TRACING :
TRIM : VT-1010-015-A130-N
SEAL PLAN :

GENERAL NOTES

A. FOR PIPING AND INSTRUMENTATION LEGENDS AND SYMBOLS, SEE P&IDs 0000-PID-0001 THRU 0000-PID-00XX.
B. INSTRUMENT NUMBERS ON THIS P&ID ARE PREFIXED BY THE UNIT NUMBER ASSOCIATED WITH THIS P&ID UNLESS OTHERWISE SPECIFIED.
C. CONTROL VALVES AND BYPASS SIZES ARE PRELIMINARY AND WILL BE CONFIRMED DURING DETAIL DESIGN.

NOTES

1. OPEN END DRAIN TO CURB AREA.
2. TOP OF VENT IS LOCATED HIGHER THAN TOP OF TANK.
3. STROKE FEEDBACK (FI-XXXX) AND STROKE CONTROL (FO-XXXX).

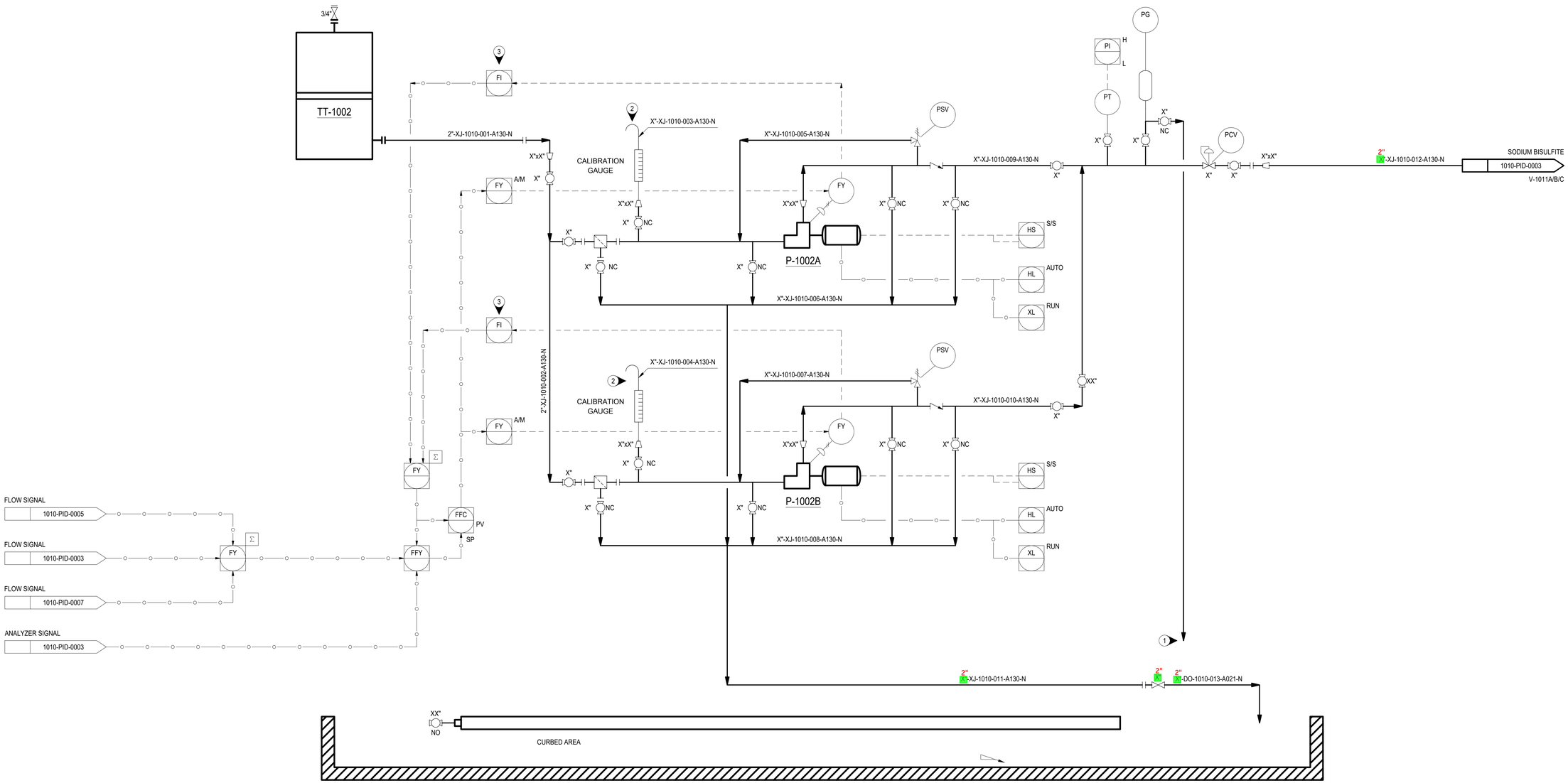

CHECK PRINT

NOT PUBLISHED. ALL RIGHTS RESERVED BY THE ENGINEER. DRAWINGS AND SPECIFICATIONS, AS INSTRUMENTS OF SERVICE, ARE ISSUED TO DESCRIBE DESIGN INTENT. THEY ARE NOT TO BE USED ON OTHER PROJECTS OR EXTENSIONS TO THIS PROJECT, EXCEPT BY AGREEMENT IN WRITING AND WITH APPROPRIATE COMPENSATION TO THE ENGINEER. CONTRACTOR, SUB-CONTRACTORS, & SUPPLIERS ARE RESPONSIBLE FOR CONFIRMING AND CORRELATING DIMENSIONS AND CONDITIONS AT THE JOB SITE, AND SHALL NOTIFY THE ENGINEER IMMEDIATELY OF ANY ERRORS OR DISCREPANCIES IN REGARD TO SUCH. DRAWINGS, DESCRIBING DESIGN INTENT, SHALL NOT INDICATE EVERY DETAIL OR SYSTEM FOR CONSTRUCTION. CONTRACTOR, SUB-CONTRACTORS, AND SUPPLIERS SHALL BE RESPONSIBLE TO PROVIDE ADDITIONAL DRAWINGS AS NECESSARY FOR PERMITS, ERECTION, INSTALLATION, AND CO-ORDINATION OF ALL WORK. CONTRACTOR, SUB-CONTRACTORS, AND SUPPLIERS SHALL BE RESPONSIBLE FOR ALL LABOR AND MATERIALS REQUIRED IN ACCORDANCE WITH DESIGN INTENT. ALL MATERIALS SHALL BE NEW, UNLESS SPECIFIED OTHERWISE, AND SHALL BE INSTALLED LEVEL, PLUMB, STRAIGHT, AND TRUE TO LINE, IN ACCORDANCE WITH THE BEST PRACTICES OF THE TRADES. THE ENGINEER SHALL NOT BE RESPONSIBLE FOR CONSTRUCTION MEANS, METHODS, TECHNIQUES, SEQUENCES OR PROCEDURES, OR FOR SAFETY PRECAUTIONS AND PROGRAMS IN CONNECTION WITH THE WORK. ALL WORK SHALL BE PERFORMED IN ACCORDANCE WITH APPLICABLE CODES AND ORDINANCES.

REFERENCE DRAWINGS:

REV #	DATE	DESCRIPTION	DRWN	CHKD	APVD
A	12-05-25	ISSUED FOR APPROVAL	GS	APB	PDN

REV #	DATE	DESCRIPTION	DRWN	CHKD	APVD

MOTIVA

CLIENT: MOTIVA ENTERPRISES LLC
PLANT: PORT ARTHUR REFINERY
JOB NO:

PROCESS FLOW DIAGRAM
SODIUM BISULFITE INJECTION SYSTEM

PROJ TITLE: AROMATICS UTILITY SCOPE REVIEW

SSP ENGINEERING & CONSULTING
13100 NORTHWEST FREEWAY
SUITE 625,
HOUSTON, TEXAS 77040

FIRM NUMBER #13619

PROJECT NO: 25MA02	SCALE: NONE
DRAWN BY: GS	CHECKED: APB
DESIGN BY:	ENG APVL: PDN
DRAWING NO: 1010-PID-0001	REV A

DRAWING: 1010-psd-0001.dwg PLOTTED BY: jason PLOT DATE: ---- DRAWING LOCATION: c:\users\jason\onedrive - engineers files - 25ma02 - aromatics utility scope cold eyes review\04 - design\04 - process\psds. (Border Rev1 5.16.25)

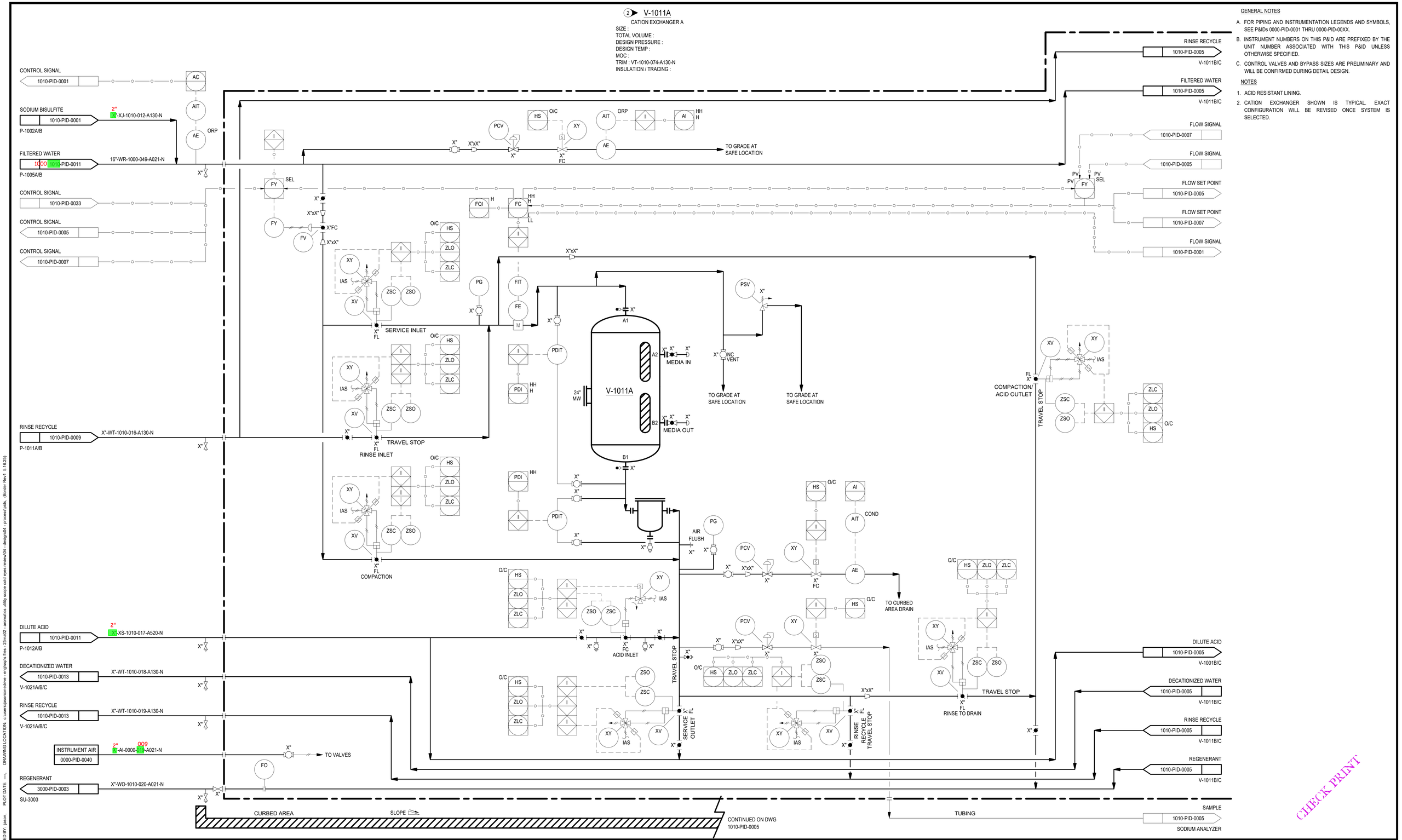

GENERAL NOTES

A. FOR PIPING AND INSTRUMENTATION LEGENDS AND SYMBOLS, SEE P&IDs 0000-PID-0001 THRU 0000-PID-00XX.

B. INSTRUMENT NUMBERS ON THIS P&ID ARE PREFIXED BY THE UNIT NUMBER ASSOCIATED WITH THIS P&ID UNLESS OTHERWISE SPECIFIED.

C. CONTROL VALVES AND BYPASS SIZES ARE PRELIMINARY AND WILL BE CONFIRMED DURING DETAIL DESIGN.

NOTES

1. ACID RESISTANT LINING.
2. CATION EXCHANGER SHOWN IS TYPICAL. EXACT CONFIGURATION WILL BE REVISED ONCE SYSTEM IS SELECTED.

CHECK PRINT

NOT PUBLISHED. ALL RIGHTS RESERVED BY THE ENGINEER. DRAWINGS AND SPECIFICATIONS, AS INSTRUMENTS OF SERVICE, ARE ISSUED TO DESCRIBE DESIGN INTENT. THEY ARE NOT TO BE USED ON OTHER PROJECTS OR EXTENSIONS TO THIS PROJECT, EXCEPT BY AGREEMENT IN WRITING AND WITH APPROPRIATE COMPENSATION TO THE ENGINEER. CONTRACTOR, SUB-CONTRACTORS, & SUPPLIERS ARE RESPONSIBLE FOR CONFIRMING AND CORRELATING DIMENSIONS AND CONDITIONS AT THE JOB SITE, AND SHALL NOTIFY THE ENGINEER IMMEDIATELY OF ANY ERRORS OR DISCREPANCIES IN REGARD TO SUCH. DRAWINGS, DESCRIBING DESIGN INTENT, SHALL NOT INDICATE EVERY DETAIL OR SYSTEM FOR CONSTRUCTION. CONTRACTOR, SUB-CONTRACTORS, AND SUPPLIERS SHALL BE RESPONSIBLE TO PROVIDE ADDITIONAL DRAWINGS AS NECESSARY FOR PERMITS, ERECTION, INSTALLATION, AND CO-ORDINATION OF ALL WORK. CONTRACTOR, SUB-CONTRACTORS, AND SUPPLIERS SHALL BE RESPONSIBLE FOR ALL LABOR AND MATERIALS REQUIRED IN ACCORDANCE WITH DESIGN INTENT. ALL MATERIALS SHALL BE NEW, UNLESS SPECIFIED OTHERWISE, AND SHALL BE INSTALLED LEVEL, PLUMB, STRAIGHT, AND TRUE TO LINE, IN ACCORDANCE WITH THE BEST PRACTICES OF THE TRADES. THE ENGINEER SHALL NOT BE RESPONSIBLE FOR CONSTRUCTION MEANS, METHODS, TECHNIQUES, SEQUENCES OR PROCEDURES, OR FOR SAFETY PRECAUTIONS AND PROGRAMS IN CONNECTION WITH THE WORK. ALL WORK SHALL BE PERFORMED IN ACCORDANCE WITH APPLICABLE CODES AND ORDINANCES.

DRAWING: 1010-pid-0003.dwg, PLOTTED BY: jason, PLOT DATE: ----, DRAWING LOCATION: c:\users\jason\onedrive - engineers files - 25ma02 - aromatics utility scope cold eyes review\04 - design\04 - process\pids, (Border Rev1 5.16.25)

REFERENCE DRAWINGS:

REV #	DATE	DESCRIPTION	DRWN	CHKD	APVD
A	12-05-25	ISSUED FOR APPROVAL	GS	APB	PDN

REV #	DATE	DESCRIPTION	DRWN	CHKD	APVD

MOTIVA

CLIENT: MOTIVA ENTERPRISES LLC
PLANT: PORT ARTHUR REFINERY
JOB NO:

PIPING & INSTRUMENTATION DIAGRAM
DEMINERALIZED WATER SYSTEM
CATION EXCHANGER A

PROJ TITLE: AROMATICS UTILITY SCOPE REVIEW

SSP ENGINEERING & CONSULTING
13100 NORTHWEST FREEWAY
SUITE 625,
HOUSTON, TEXAS 77040

FIRM NUMBER #13619

PROJECT NO: 25MA02	SCALE: NONE
DRAWN BY: GS	CHECKED: APB
DESIGN BY:	ENG APVL: PDN
DRAWING NO: 1010-PID-0003	REV A

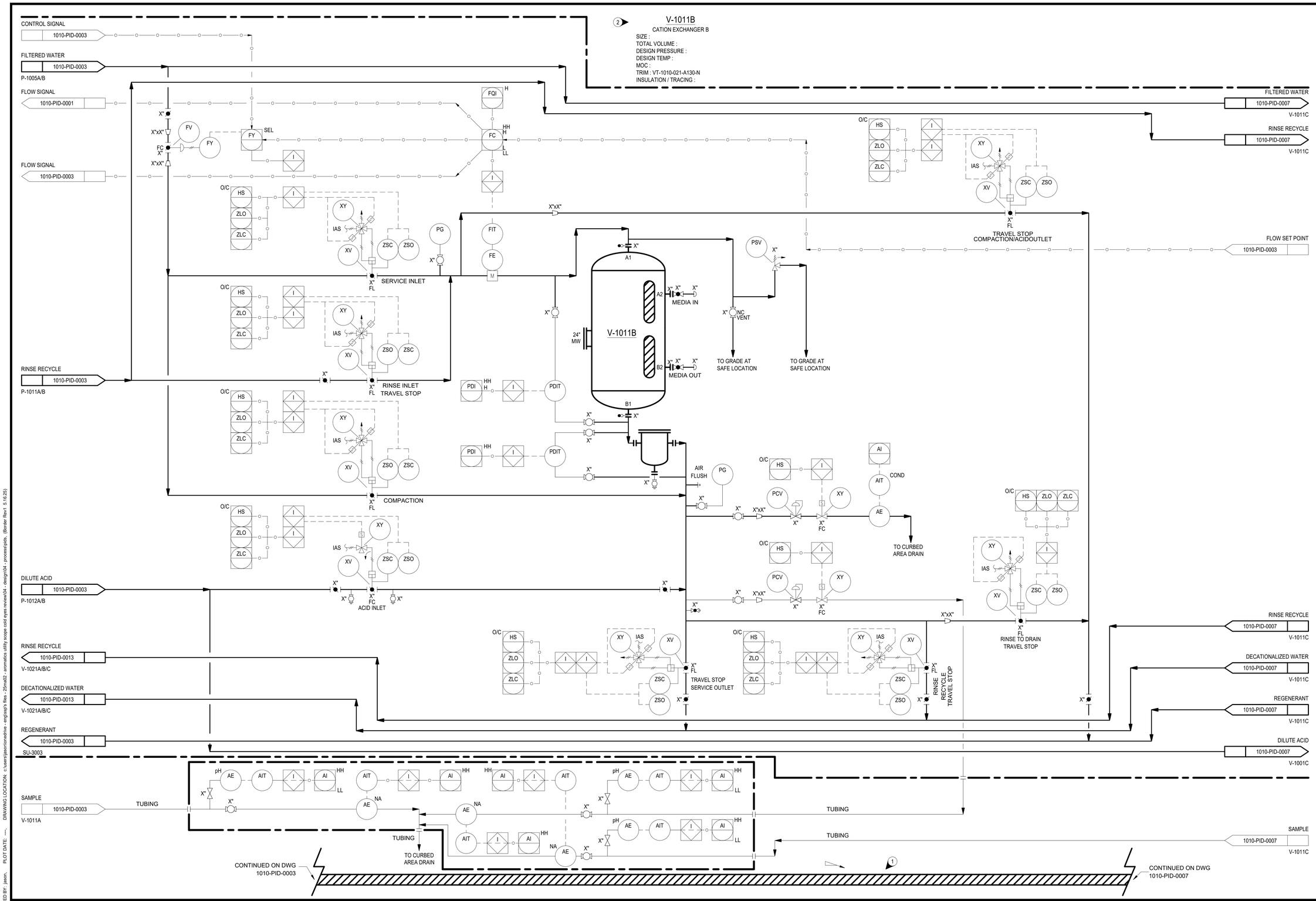

GENERAL NOTES

A. FOR PIPING AND INSTRUMENTATION LEGENDS AND SYMBOLS, SEE P&IDs 0000-PID-0001 THRU 0000-PID-00XX.

B. INSTRUMENT NUMBERS ON THIS P&ID ARE PREFIXED BY THE UNIT NUMBER ASSOCIATED WITH THIS P&ID UNLESS OTHERWISE SPECIFIED.

C. CONTROL VALVES AND BYPASS SIZES ARE PRELIMINARY AND WILL BE CONFIRMED DURING DETAIL DESIGN.

NOTES

1. ACID RESISTANT LINING.
2. CATION EXCHANGER SHOWN IS TYPICAL. EXACT CONFIGURATION WILL BE REVISED ONCE SYSTEM IS SELECTED.

CHECK PRINT

NOT PUBLISHED. ALL RIGHTS RESERVED BY THE ENGINEER. DRAWINGS AND SPECIFICATIONS, AS INSTRUMENTS OF SERVICE, ARE ISSUED TO DESCRIBE DESIGN INTENT. THEY ARE NOT TO BE USED ON OTHER PROJECTS OR EXTENSIONS TO THIS PROJECT, EXCEPT BY AGREEMENT IN WRITING AND WITH APPROPRIATE COMPENSATION TO THE ENGINEER. CONTRACTOR, SUB-CONTRACTORS, & SUPPLIERS ARE RESPONSIBLE FOR CONFIRMING AND CORRELATING DIMENSIONS AND CONDITIONS AT THE JOB SITE, AND SHALL NOTIFY THE ENGINEER IMMEDIATELY OF ANY ERRORS OR DISCREPANCIES IN REGARD TO SUCH. DRAWINGS, DESCRIBING DESIGN INTENT, SHALL NOT INDICATE EVERY DETAIL OR SYSTEM FOR CONSTRUCTION. CONTRACTOR, SUB-CONTRACTORS, AND SUPPLIERS SHALL BE RESPONSIBLE TO PROVIDE ADDITIONAL DRAWINGS AS NECESSARY FOR PERMITS, ERECTION, INSTALLATION, AND CO-ORDINATION OF ALL WORK. CONTRACTOR, SUB-CONTRACTORS, AND SUPPLIERS SHALL BE RESPONSIBLE FOR ALL LABOR AND MATERIALS REQUIRED IN ACCORDANCE WITH DESIGN INTENT. ALL MATERIALS SHALL BE NEW, UNLESS SPECIFIED OTHERWISE, AND SHALL BE INSTALLED LEVEL, PLUMB, STRAIGHT, AND TRUE TO LINE, IN ACCORDANCE WITH THE BEST PRACTICES OF THE TRADES. THE ENGINEER SHALL NOT BE RESPONSIBLE FOR CONSTRUCTION MEANS, METHODS, TECHNIQUES, SEQUENCES OR PROCEDURES, OR FOR SAFETY PRECAUTIONS AND PROGRAMS IN CONNECTION WITH THE WORK. ALL WORK SHALL BE PERFORMED IN ACCORDANCE WITH APPLICABLE CODES AND ORDINANCES.

REFERENCE DRAWINGS:

REV #	DATE	DESCRIPTION	DRWN	CHKD	APVD
A	12-05-25	ISSUED FOR APPROVAL	GS	APB	PDN

REV #	DATE	DESCRIPTION	DRWN	CHKD	APVD

MOTIVA

CLIENT: MOTIVA ENTERPRISES LLC
PLANT: PORT ARTHUR REFINERY
JOB NO:

PIPING & INSTRUMENTATION DIAGRAM

DEMINERALIZED WATER PACKAGE
CATION EXCHANGER B

PROJ TITLE: AROMATICS UTILITY SCOPE REVIEW

SSP ENGINEERING & CONSULTING
13100 NORTHWEST FREEWAY
SUITE 625,
HOUSTON, TEXAS 77040

FIRM NUMBER #13619

PROJECT NO: 25MA02	SCALE: NONE
DRAWN BY: GS	CHECKED: APB
DESIGN BY:	ENG APVL: PDN
DRAWING NO: 1010-PID-0005	REV A

DRAWING: 1010-pid-0005.dwg PLOTTED BY: jason PLOT DATE: ---- DRAWING LOCATION: c:\users\jason\onedrive - engineap's files - 25ma02 - aromatics utility scope cold eyes review\04 - design\04 - process\pids (Border Rev1 5.16.25)

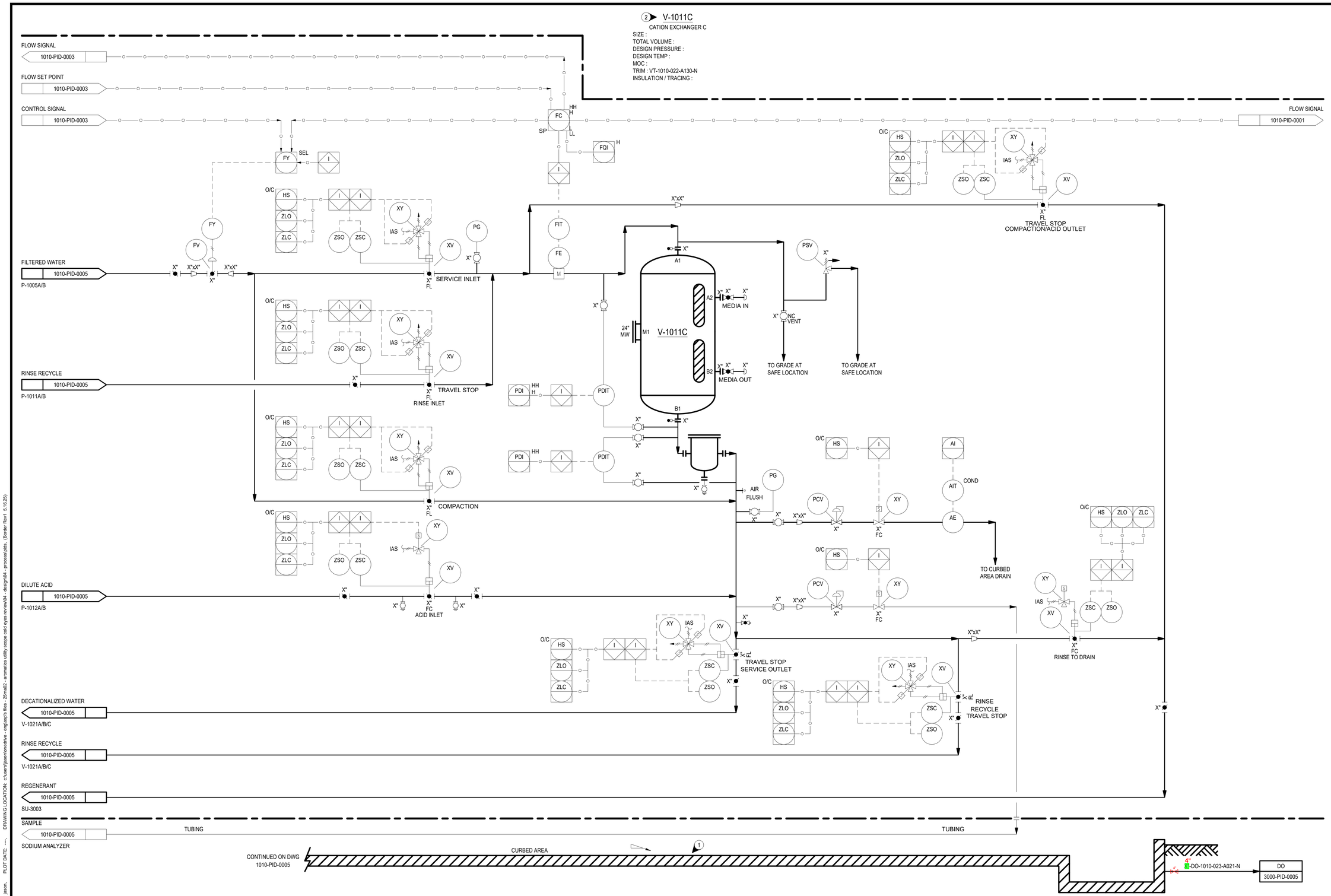

GENERAL NOTES

A. FOR PIPING AND INSTRUMENTATION LEGENDS AND SYMBOLS, SEE P&IDs 0000-PID-0001 THRU 0000-PID-00XX.

B. INSTRUMENT NUMBERS ON THIS P&ID ARE PREFIXED BY THE UNIT NUMBER ASSOCIATED WITH THIS P&ID UNLESS OTHERWISE SPECIFIED.

C. CONTROL VALVES AND BYPASS SIZES ARE PRELIMINARY AND WILL BE CONFIRMED DURING DETAIL DESIGN.

NOTES

1. ACID RESISTANT LINING.
2. CATION EXCHANGER SHOWN IS TYPICAL. EXACT CONFIGURATION WILL BE REVISED ONCE SYSTEM IS SELECTED.

CHECK PRINT

NOT PUBLISHED. ALL RIGHTS RESERVED BY THE ENGINEER. DRAWINGS AND SPECIFICATIONS, AS INSTRUMENTS OF SERVICE, ARE ISSUED TO DESCRIBE DESIGN INTENT. THEY ARE NOT TO BE USED ON OTHER PROJECTS OR EXTENSIONS TO THIS PROJECT, EXCEPT BY AGREEMENT IN WRITING AND WITH APPROPRIATE COMPENSATION TO THE ENGINEER. CONTRACTOR, SUB-CONTRACTORS, & SUPPLIERS ARE RESPONSIBLE FOR CONFIRMING AND CORRELATING DIMENSIONS AND CONDITIONS AT THE JOB SITE, AND SHALL NOTIFY THE ENGINEER IMMEDIATELY OF ANY ERRORS OR DISCREPANCIES IN REGARD TO SUCH. DRAWINGS, DESCRIBING DESIGN INTENT, SHALL NOT INDICATE EVERY DETAIL OR SYSTEM FOR CONSTRUCTION. CONTRACTOR, SUB-CONTRACTORS, AND SUPPLIERS SHALL BE RESPONSIBLE TO PROVIDE ADDITIONAL DRAWINGS AS NECESSARY FOR PERMITS, ERECTION, INSTALLATION, AND CO-ORDINATION OF ALL WORK. CONTRACTOR, SUB-CONTRACTORS, AND SUPPLIERS SHALL BE RESPONSIBLE FOR ALL LABOR AND MATERIALS REQUIRED IN ACCORDANCE WITH DESIGN INTENT. ALL MATERIALS SHALL BE NEW, UNLESS SPECIFIED OTHERWISE, AND SHALL BE INSTALLED LEVEL, PLUMB, STRAIGHT, AND TRUE TO LINE, IN ACCORDANCE WITH THE BEST PRACTICES OF THE TRADES. THE ENGINEER SHALL NOT BE RESPONSIBLE FOR CONSTRUCTION MEANS, METHODS, TECHNIQUES, SEQUENCES OR PROCEDURES, OR FOR SAFETY PRECAUTIONS AND PROGRAMS IN CONNECTION WITH THE WORK. ALL WORK SHALL BE PERFORMED IN ACCORDANCE WITH APPLICABLE CODES AND ORDINANCES.

REFERENCE DRAWINGS:

REV #	DATE	DESCRIPTION	DRWN	CHKD	APVD
A	12-05-25	ISSUED FOR APPROVAL	GS	APB	PDN

REV #	DATE	DESCRIPTION	DRWN	CHKD	APVD

MOTIVA

CLIENT: MOTIVA ENTERPRISES LLC
PLANT: PORT ARTHUR REFINERY
JOB NO:

PIPING & INSTRUMENTATION DIAGRAM
DEMINERALIZED WATER PACKAGE
CATION EXCHANGER C

PROJ TITLE: AROMATICS UTILITY SCOPE REVIEW

SSP ENGINEERING & CONSULTING
13100 NORTHWEST FREEWAY
SUITE 625,
HOUSTON, TEXAS 77040

FIRM NUMBER #13619

PROJECT NO: 25MA02	SCALE: NONE
DRAWN BY: GS	CHECKED: APB
DESIGN BY:	ENG APVL: PDN
DRAWING NO: 1010-PID-0007	REV A

DRAWING: 1010-pid-0007.dwg PLOTTED BY: jason PLOT DATE: ---- DRAWING LOCATION: c:\users\jason\onedrive - engineap's files - 25ma02 - aromatics utility scope cold eyes review\04 - design\04 - process\pids (Border Rev1 5.16.25)

P-1011A/B

DEMIN RINSE RECYCLE PUMPS
RATED CAPACITY :
DIFFERENTIAL PRESSURE :
RATED POWER :
MOC (CASING / INTERNAL) :
INSULATION / TRACING :
TRIM : VT-1010-048-A130-N
SEAL PLAN :

GENERAL NOTES

A. FOR PIPING AND INSTRUMENTATION LEGENDS AND SYMBOLS, SEE P&IDs 0000-PID-0001 THRU 0000-PID-00XX.

B. INSTRUMENT NUMBERS ON THIS P&ID ARE PREFIXED BY THE UNIT NUMBER ASSOCIATED WITH THIS P&ID UNLESS OTHERWISE SPECIFIED.

C. CONTROL VALVES AND BYPASS SIZES ARE PRELIMINARY AND WILL BE CONFIRMED DURING DETAIL DESIGN.

NOTES

1. RINSE RECYCLE PUMPS ARE USED BY CATION/ ANION. ONLY ONE PUMP CAN BE IN RINSE RECYCLE AT A TIME. PUMPS ALTERNATE AT EVERY START.
2. ACID/ CAUSTIC RESISTANT LINING.

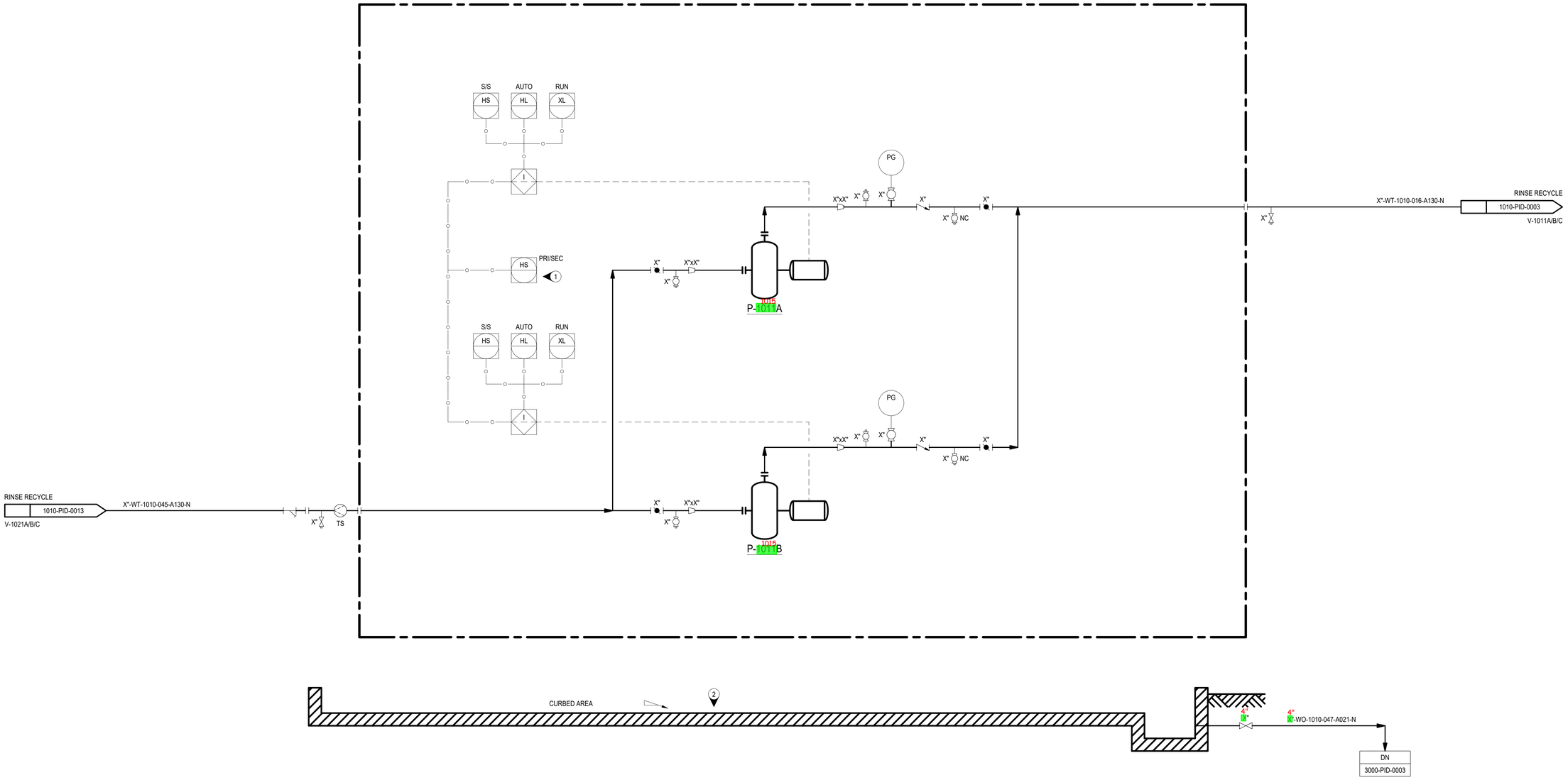

CHECK PRINT

NOT PUBLISHED, ALL RIGHTS RESERVED BY THE ENGINEER. DRAWINGS AND SPECIFICATIONS, AS INSTRUMENTS OF SERVICE, ARE ISSUED TO DESCRIBE DESIGN INTENT. THEY ARE NOT TO BE USED ON OTHER PROJECTS OR EXTENSIONS TO THIS PROJECT, EXCEPT BY AGREEMENT IN WRITING AND WITH APPROPRIATE COMPENSATION TO THE ENGINEER. CONTRACTOR, SUB-CONTRACTORS, & SUPPLIERS ARE RESPONSIBLE FOR CONFIRMING AND CORRELATING DIMENSIONS AND CONDITIONS AT THE JOB SITE, AND SHALL NOTIFY THE ENGINEER IMMEDIATELY OF ANY ERRORS OR DISCREPANCIES IN REGARD TO SUCH DRAWINGS, DESCRIBING DESIGN INTENT, SHALL NOT INDICATE EVERY DETAIL OR SYSTEM FOR CONSTRUCTION. CONTRACTOR, SUB-CONTRACTORS, AND SUPPLIERS SHALL BE RESPONSIBLE TO PROVIDE ADDITIONAL DRAWINGS AS NECESSARY FOR PERMITS, ERECTION, INSTALLATION, AND CO-ORDINATION OF ALL WORK. CONTRACTOR, SUB-CONTRACTORS, AND SUPPLIERS SHALL BE RESPONSIBLE FOR ALL LABOR AND MATERIALS REQUIRED IN ACCORDANCE WITH DESIGN INTENT. ALL MATERIALS SHALL BE NEW, UNLESS SPECIFIED OTHERWISE, AND SHALL BE INSTALLED LEVEL, PLUMB, STRAIGHT, AND TRUE TO LINE, IN ACCORDANCE WITH THE BEST PRACTICES OF THE TRADES. THE ENGINEER SHALL NOT BE RESPONSIBLE FOR CONSTRUCTION MEANS, METHODS, TECHNIQUES, SEQUENCES OR PROCEDURES, OR FOR SAFETY PRECAUTIONS AND PROGRAMS IN CONNECTION WITH THE WORK. ALL WORK SHALL BE PERFORMED IN ACCORDANCE WITH APPLICABLE CODES AND ORDINANCES.

DRAWING: 1010-pid-0009.dwg PLOTTED BY: jason. PLOT DATE: ---- DRAWING LOCATION: c:\users\jason\onedrive - eng\ssp's files - 25ma02 - aromatics utility scope cold eyes review\04 - design\04 - process\pids (Border Rev1 5.16.25)

REFERENCE DRAWINGS:

REV #	DATE	DESCRIPTION	DRWN	CHKD	APVD
A	12-05-25	ISSUED FOR APPROVAL	GS	APB	PDN

REV #	DATE	DESCRIPTION	DRWN	CHKD	APVD

MOTIVA

CLIENT: MOTIVA ENTERPRISES LLC
PLANT: PORT ARTHUR REFINERY
JOB NO:

PIPING & INSTRUMENTATION DIAGRAM
DEMINERALIZED WATER PACKAGE
DEMIN RINSE RECYCLE PUMPS

PROJ TITLE: AROMATICS UTILITY SCOPE REVIEW

SSP ENGINEERING & CONSULTING
13100 NORTHWEST FREEWAY
SUITE 625,
HOUSTON, TEXAS 77040

FIRM NUMBER #13619

PROJECT NO: 25MA02	SCALE: NONE
DRAWN BY: GS	CHECKED: APB
DESIGN BY:	ENG APVL: PDN
DRAWING NO: 1010-PID-0009	REV A

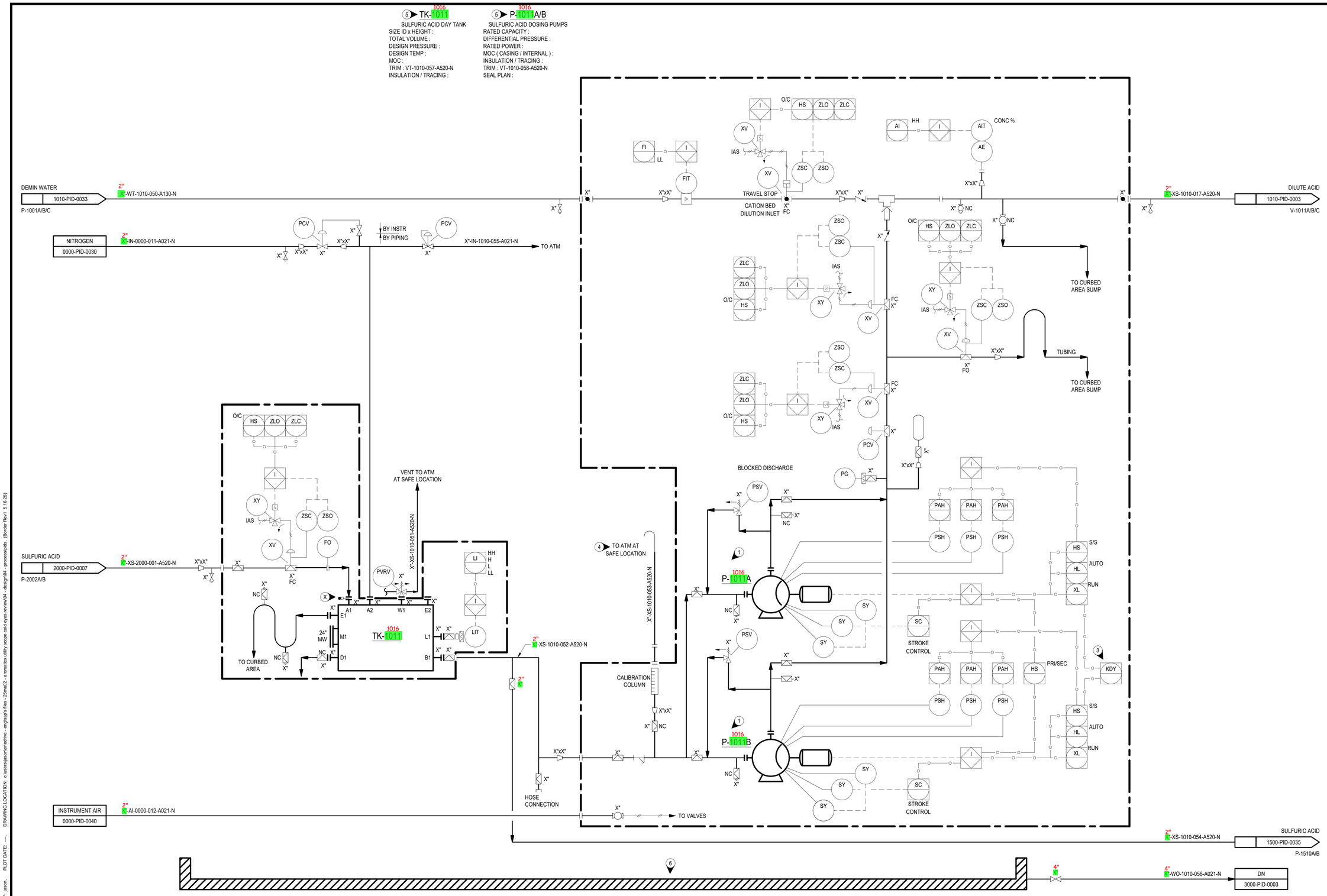

GENERAL NOTES

A. FOR PIPING AND INSTRUMENTATION LEGENDS AND SYMBOLS, SEE P&IDs 0000-PID-0001 THRU 0000-PID-00XX.

B. INSTRUMENT NUMBERS ON THIS P&ID ARE PREFIXED BY THE UNIT NUMBER ASSOCIATED WITH THIS P&ID UNLESS OTHERWISE SPECIFIED.

C. CONTROL VALVES AND BYPASS SIZES ARE PRELIMINARY AND WILL BE CONFIRMED DURING DETAIL DESIGN.

NOTES

1. CHECK VALVES ARE INTERNAL TO THE PUMP.
2. VALVE STEM IS ACCESSIBLE FROM GRADE.
3. DOSING PUMPS ALTERNATE DUTY AFTER EACH REGEN.
4. CALIBRATION COLUMN VENT IS EXTENDED ABOVE THE MAXIMUM TANK ELEVATION.
5. SULFURIC ACID DILUTION SYSTEM SHOWN IS TYPICAL. EXACT CONFIGURATION WILL BE REVISED ONCE SYSTEM IS SELECTED.
6. ACID RESISTANT LINING.

CHECK PRINT

NOT PUBLISHED. ALL RIGHTS RESERVED BY THE ENGINEER. DRAWINGS AND SPECIFICATIONS, AS INSTRUMENTS OF SERVICE, ARE ISSUED TO DESCRIBE DESIGN INTENT. THEY ARE NOT TO BE USED ON OTHER PROJECTS OR EXTENSIONS TO THIS PROJECT, EXCEPT BY AGREEMENT IN WRITING AND WITH APPROPRIATE COMPENSATION TO THE ENGINEER. CONTRACTOR, SUB-CONTRACTORS, & SUPPLIERS ARE RESPONSIBLE FOR CONFIRMING AND CORRELATING DIMENSIONS AND CONDITIONS AT THE JOB SITE, AND SHALL NOTIFY THE ENGINEER IMMEDIATELY OF ANY ERRORS OR DISCREPANCIES IN REGARD TO SUCH. DRAWINGS, DESCRIBING DESIGN INTENT, SHALL NOT INDICATE EVERY DETAIL OR SYSTEM FOR CONSTRUCTION. CONTRACTOR, SUB-CONTRACTORS, AND SUPPLIERS SHALL BE RESPONSIBLE TO PROVIDE ADDITIONAL DRAWINGS AS NECESSARY FOR PERMITS, ERECTION, INSTALLATION, AND CO-ORDINATION OF ALL WORK. CONTRACTOR, SUB-CONTRACTORS, AND SUPPLIERS SHALL BE RESPONSIBLE FOR ALL LABOR AND MATERIALS REQUIRED IN ACCORDANCE WITH DESIGN INTENT. ALL MATERIALS SHALL BE NEW, UNLESS SPECIFIED OTHERWISE, AND SHALL BE INSTALLED LEVEL, PLUMB, STRAIGHT, AND TRUE TO LINE, IN ACCORDANCE WITH THE BEST PRACTICES OF THE TRADES. THE ENGINEER SHALL NOT BE RESPONSIBLE FOR CONSTRUCTION MEANS, METHODS, TECHNIQUES, SEQUENCES OR PROCEDURES, OR FOR SAFETY PRECAUTIONS AND PROGRAMS IN CONNECTION WITH THE WORK. ALL WORK SHALL BE PERFORMED IN ACCORDANCE WITH APPLICABLE CODES AND ORDINANCES.

REFERENCE DRAWINGS:

REV #	DATE	DESCRIPTION	DRWN	CHKD	APVD
A	12-05-25	ISSUED FOR APPROVAL	GS	APB	PDN

REV #	DATE	DESCRIPTION	DRWN	CHKD	APVD

MOTIVA

CLIENT: MOTIVA ENTERPRISES LLC
PLANT: PORT ARTHUR REFINERY
JOB NO:

PIPING & INSTRUMENTATION DIAGRAM

DEMINERALIZER WATER PACKAGE
ACID DILUTION SYSTEM

PROJ TITLE: AROMATICS UTILITY SCOPE REVIEW

SSP ENGINEERING & CONSULTING
13100 NORTHWEST FREEWAY
SUITE 625,
HOUSTON, TEXAS 77040

FIRM NUMBER #13619

PROJECT NO: 25MA02	SCALE: NONE
DRAWN BY: GS	CHECKED: APB
DESIGN BY:	ENG APVL: PDN
DRAWING NO: 1010-PID-0011	REV A

DRAWING: 1010-psd-0011.dwg PLOTTED BY: jason PLOT DATE: ---- DRAWING LOCATION: c:\users\jasonjonesfive - engineering files - 25ma02 - aromatics utility scope cold eyes review\04 - design\04 - process\pids (Border Rev1 5.16.25)

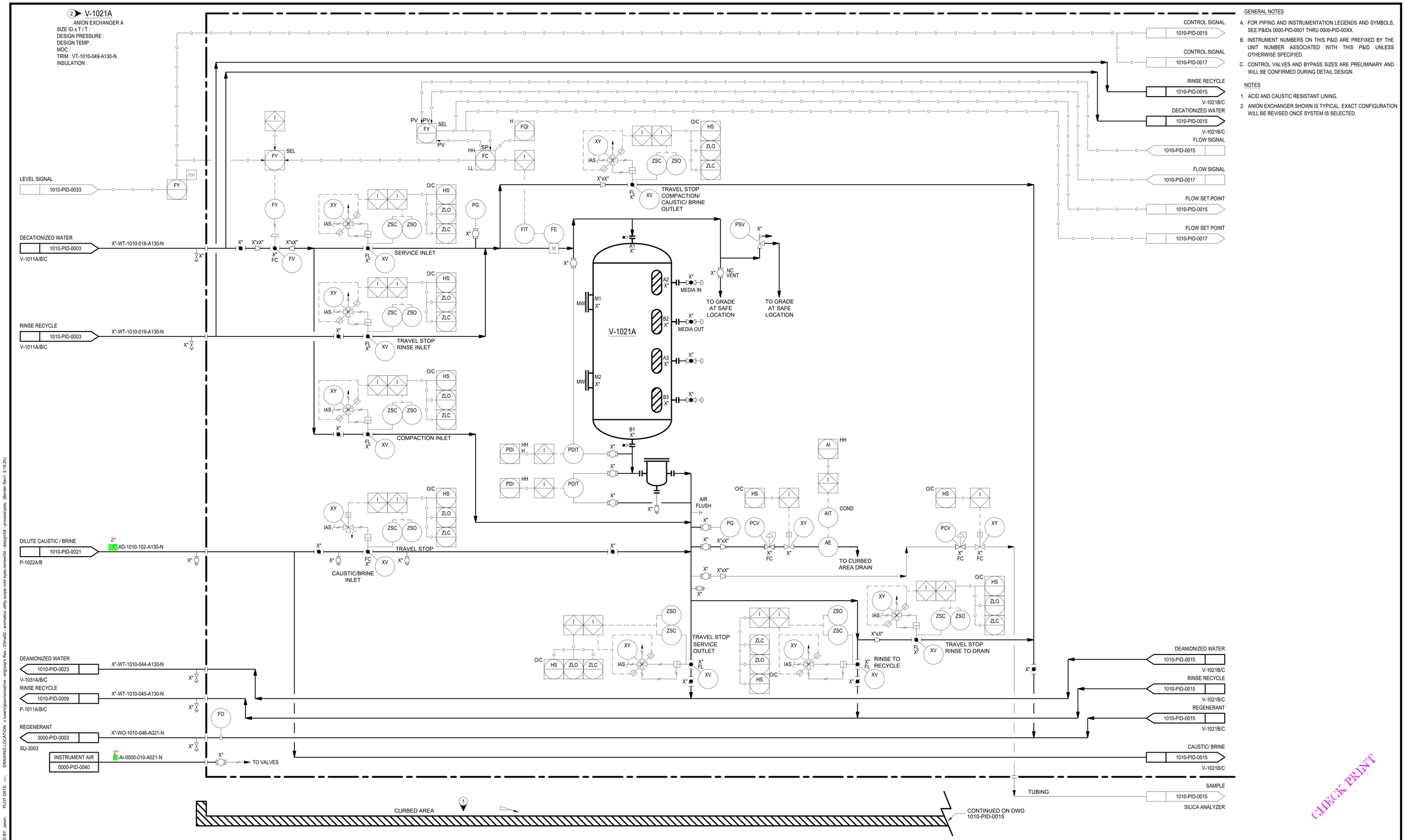

GENERAL NOTES

A. FOR PIPING AND INSTRUMENTATION LEGENDS AND SYMBOLS, SEE P&IDs 0000-PID-0001 THRU 0000-PID-00XX.

B. INSTRUMENT NUMBERS ON THIS P&ID ARE PREFIXED BY THE UNIT NUMBER ASSOCIATED WITH THIS P&ID UNLESS OTHERWISE SPECIFIED.

C. CONTROL VALVES AND BYPASS SIZES ARE PRELIMINARY AND WILL BE CONFIRMED DURING DETAIL DESIGN.

NOTES

1. ACID AND CAUSTIC RESISTANT LINING.
2. ANION EXCHANGER SHOWN IS TYPICAL. EXACT CONFIGURATION WILL BE REVISED ONCE SYSTEM IS SELECTED.

CHECK PRINT

NOT PUBLISHED, ALL RIGHTS RESERVED BY THE ENGINEER. DRAWINGS AND SPECIFICATIONS, AS INSTRUMENTS OF SERVICE, ARE ISSUED TO DESCRIBE DESIGN INTENT. THEY ARE NOT TO BE USED ON OTHER PROJECTS OR EXTENSIONS TO THIS PROJECT, EXCEPT BY AGREEMENT IN WRITING AND WITH APPROPRIATE COMPENSATION TO THE ENGINEER. CONTRACTOR, SUB-CONTRACTORS, & SUPPLIERS ARE RESPONSIBLE FOR CONFIRMING AND CORRELATING DIMENSIONS AND CONDITIONS AT THE JOB SITE, AND SHALL NOTIFY THE ENGINEER IMMEDIATELY OF ANY ERRORS OR DISCREPANCIES IN REGARD TO SUCH DRAWINGS, DESCRIBING DESIGN INTENT, SHALL NOT INDICATE EVERY DETAIL OR SYSTEM FOR CONSTRUCTION. CONTRACTOR, SUB-CONTRACTORS, AND SUPPLIERS SHALL BE RESPONSIBLE TO PROVIDE ADDITIONAL DRAWINGS AS NECESSARY FOR PERMITS, ERECTION, INSTALLATION, AND CO-ORDINATION OF ALL WORK. CONTRACTOR, SUB-CONTRACTORS, AND SUPPLIERS SHALL BE RESPONSIBLE FOR ALL LABOR AND MATERIALS REQUIRED IN ACCORDANCE WITH DESIGN INTENT. ALL MATERIALS SHALL BE NEW, UNLESS SPECIFIED OTHERWISE, AND SHALL BE INSTALLED LEVEL, PLUMB, STRAIGHT, AND TRUE TO LINE, IN ACCORDANCE WITH THE BEST PRACTICES OF THE TRADES. THE ENGINEER SHALL NOT BE RESPONSIBLE FOR CONSTRUCTION MEANS, METHODS, TECHNIQUES, SEQUENCES OR PROCEDURES, OR FOR SAFETY PRECAUTIONS AND PROGRAMS IN CONNECTION WITH THE WORK. ALL WORK SHALL BE PERFORMED IN ACCORDANCE WITH APPLICABLE CODES AND ORDINANCES.

REFERENCE DRAWINGS:

REV #	DATE	DESCRIPTION	DRWN	CHKD	APVD
A	12-05-25	ISSUED FOR APPROVAL	GS	APB	PDN

REV #	DATE	DESCRIPTION	DRWN	CHKD	APVD

MOTIVA

CLIENT: MOTIVA ENTERPRISES LLC
PLANT: PORT ARTHUR REFINERY
JOB NO:

PIPING & INSTRUMENTATION DIAGRAM
DEMINERALIZED WATER PACKAGE
ANION EXCHANGER A

PROJ TITLE: AROMATICS UTILITY SCOPE REVIEW

SSP ENGINEERING & CONSULTING
13100 NORTHWEST FREEWAY
SUITE 625,
HOUSTON, TEXAS 77040

FIRM NUMBER #13619

PROJECT NO: 25MA02	SCALE: NONE
DRAWN BY: GS	CHECKED: APB
DESIGN BY:	ENG APVL: PDN
DRAWING NO: 1010-PID-0013	REV A

DRAWING: 1010-pid-0013.dwg PLOTTED BY: jason PLOT DATE: ---- DRAWING LOCATION: C:\users\jason\onedrive - engineap's files - 25ma02 - aromatics utility scope cold eyes review\04 - design\04 - process\pids, (Border Rev1 5.16.25)

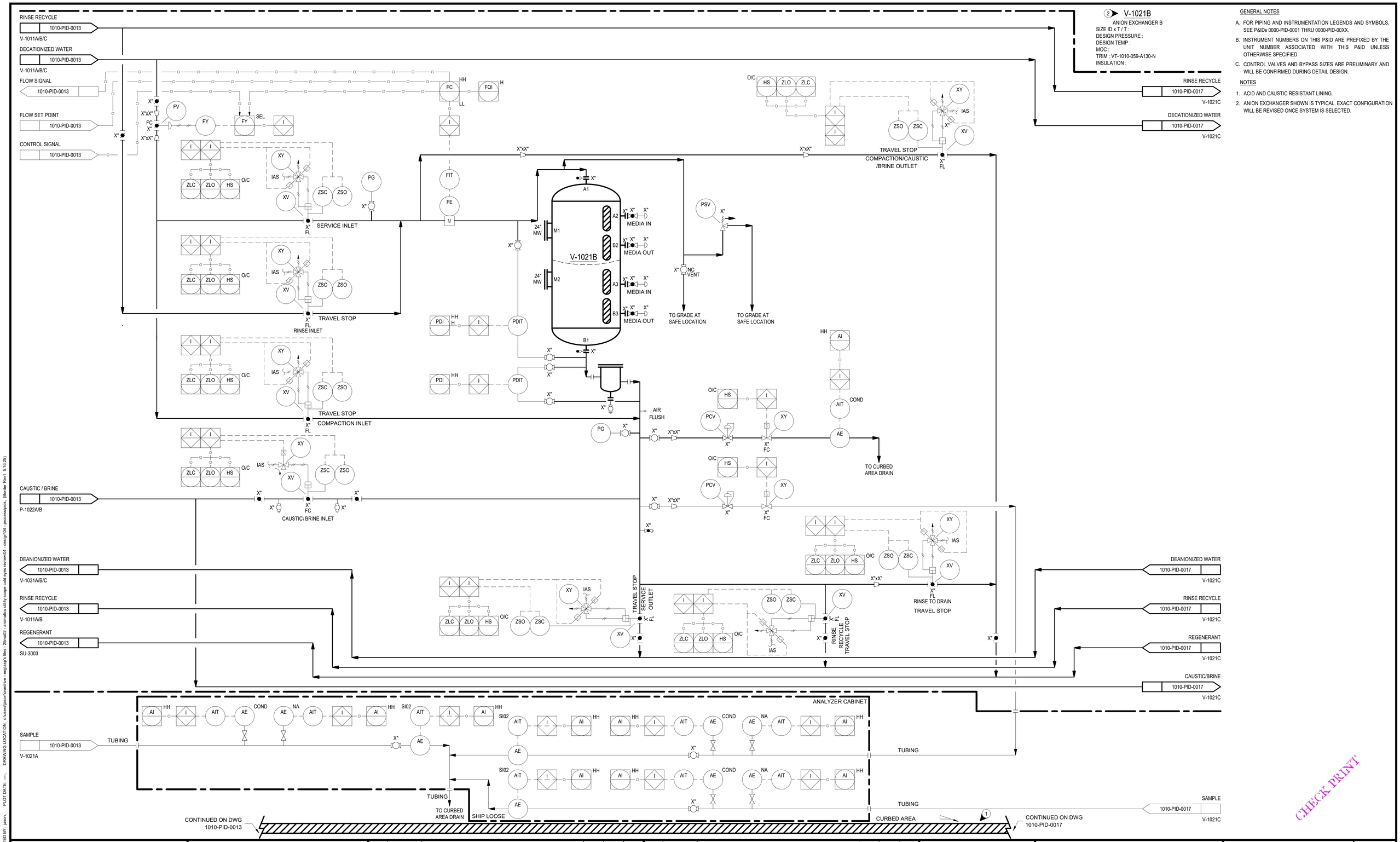

GENERAL NOTES

A. FOR PIPING AND INSTRUMENTATION LEGENDS AND SYMBOLS, SEE P&IDs 0000-PID-0001 THRU 0000-PID-00XX.

B. INSTRUMENT NUMBERS ON THIS P&ID ARE PREFIXED BY THE UNIT NUMBER ASSOCIATED WITH THIS P&ID UNLESS OTHERWISE SPECIFIED.

C. CONTROL VALVES AND BYPASS SIZES ARE PRELIMINARY AND WILL BE CONFIRMED DURING DETAIL DESIGN.

NOTES

1. ACID AND CAUSTIC RESISTANT LINING.
2. ANION EXCHANGER SHOWN IS TYPICAL. EXACT CONFIGURATION WILL BE REVISED ONCE SYSTEM IS SELECTED.

CHECK PRINT

NOT PUBLISHED. ALL RIGHTS RESERVED BY THE ENGINEER. DRAWINGS AND SPECIFICATIONS, AS INSTRUMENTS OF SERVICE, ARE ISSUED TO DESCRIBE DESIGN INTENT. THEY ARE NOT TO BE USED ON OTHER PROJECTS OR EXTENSIONS TO THIS PROJECT, EXCEPT BY AGREEMENT IN WRITING AND WITH APPROPRIATE COMPENSATION TO THE ENGINEER. CONTRACTOR, SUB-CONTRACTORS, & SUPPLIERS ARE RESPONSIBLE FOR CONFIRMING AND CORRELATING DIMENSIONS AND CONDITIONS AT THE JOB SITE, AND SHALL NOTIFY THE ENGINEER IMMEDIATELY OF ANY ERRORS OR DISCREPANCIES IN REGARD TO SUCH. DRAWINGS, DESCRIBING DESIGN INTENT, SHALL NOT INDICATE EVERY DETAIL OR SYSTEM FOR CONSTRUCTION. CONTRACTOR, SUB-CONTRACTORS, AND SUPPLIERS SHALL BE RESPONSIBLE TO PROVIDE ADDITIONAL DRAWINGS AS NECESSARY FOR PERMITS, ERECTION, INSTALLATION, AND CO-ORDINATION OF ALL WORK. CONTRACTOR, SUB-CONTRACTORS, AND SUPPLIERS SHALL BE RESPONSIBLE FOR ALL LABOR AND MATERIALS REQUIRED IN ACCORDANCE WITH DESIGN INTENT. ALL MATERIALS SHALL BE NEW, UNLESS SPECIFIED OTHERWISE, AND SHALL BE INSTALLED LEVEL, PLUMB, STRAIGHT, AND TRUE TO LINE, IN ACCORDANCE WITH THE BEST PRACTICES OF THE TRADES. THE ENGINEER SHALL NOT BE RESPONSIBLE FOR CONSTRUCTION MEANS, METHODS, TECHNIQUES, SEQUENCES OR PROCEDURES, OR FOR SAFETY PRECAUTIONS AND PROGRAMS IN CONNECTION WITH THE WORK. ALL WORK SHALL BE PERFORMED IN ACCORDANCE WITH APPLICABLE CODES AND ORDINANCES.

REFERENCE DRAWINGS:

REV #	DATE	DESCRIPTION	DRWN	CHKD	APVD
A	12-05-25	ISSUED FOR APPROVAL	GS	APB	PDN

REV #	DATE	DESCRIPTION	DRWN	CHKD	APVD

MOTIVA

CLIENT: MOTIVA ENTERPRISES LLC
PLANT: PORT ARTHUR REFINERY
JOB NO:

PIPING & INSTRUMENTATION DIAGRAM
DEMINERALIZED WATER PACKAGE
ANION EXCHANGER B

PROJ TITLE: AROMATICS UTILITY SCOPE REVIEW

SSP ENGINEERING & CONSULTING
13100 NORTHWEST FREEWAY
SUITE 625,
HOUSTON, TEXAS 77040

FIRM NUMBER #13619

PROJECT NO: 25MA02	SCALE: NONE
DRAWN BY: GS	CHECKED: APB
DESIGN BY:	ENG APVL: PDN
DRAWING NO: 1010-PID-0015	REV A

DRAWING: 1010-pid-0015.dwg PLOTTED BY: jason PLOT DATE: ---- DRAWING LOCATION: c:\users\jason\onedrive - engineap's files - 25ma02 - aromatics utility scope cold eyes review\04 - design\04 - process\pids (Border Rev1 5.16.25)

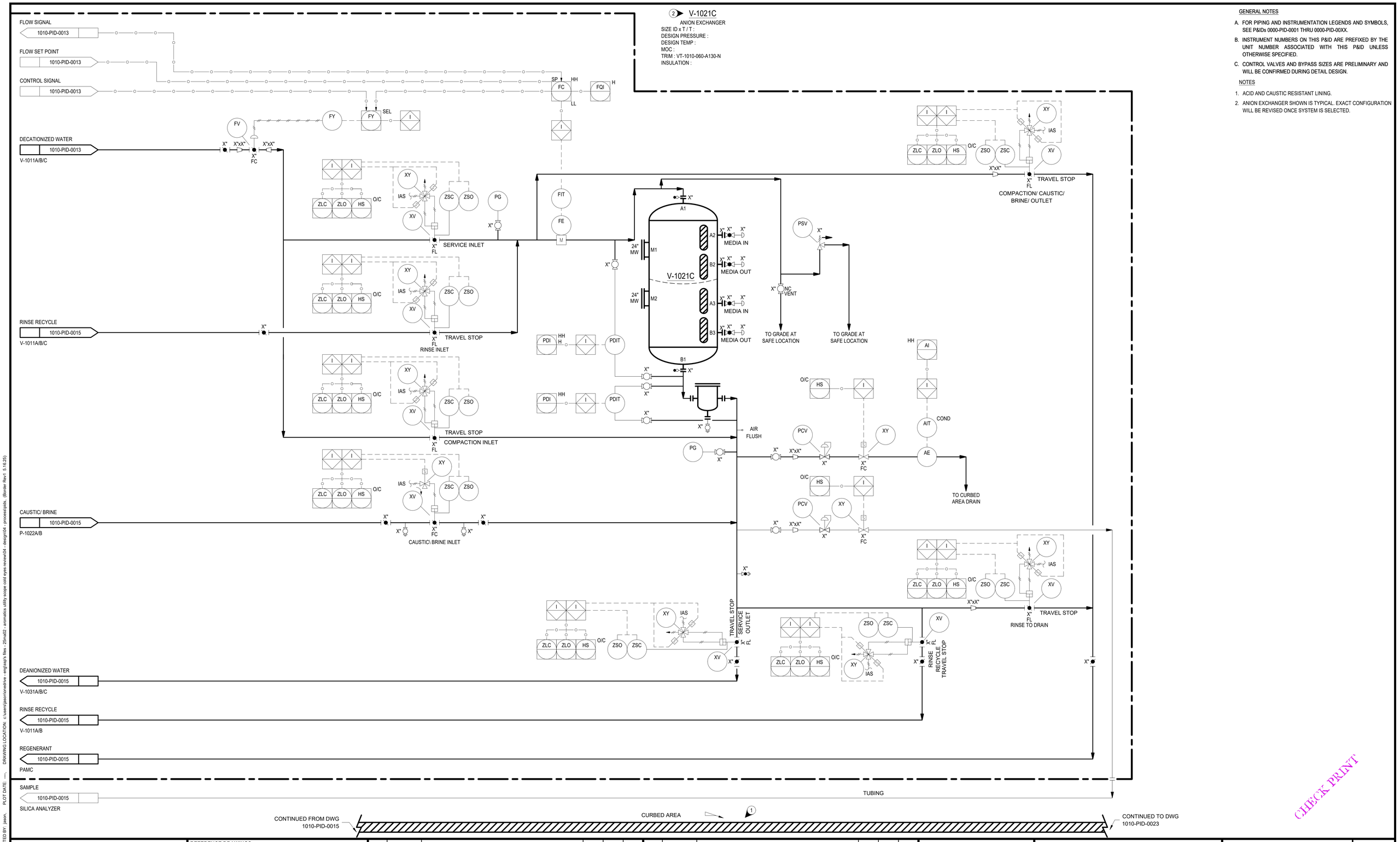

GENERAL NOTES

A. FOR PIPING AND INSTRUMENTATION LEGENDS AND SYMBOLS, SEE P&IDs 0000-PID-0001 THRU 0000-PID-00XX.

B. INSTRUMENT NUMBERS ON THIS P&ID ARE PREFIXED BY THE UNIT NUMBER ASSOCIATED WITH THIS P&ID UNLESS OTHERWISE SPECIFIED.

C. CONTROL VALVES AND BYPASS SIZES ARE PRELIMINARY AND WILL BE CONFIRMED DURING DETAIL DESIGN.

NOTES

1. ACID AND CAUSTIC RESISTANT LINING.
2. ANION EXCHANGER SHOWN IS TYPICAL. EXACT CONFIGURATION WILL BE REVISED ONCE SYSTEM IS SELECTED.

CHECK PRINT

NOT PUBLISHED, ALL RIGHTS RESERVED BY THE ENGINEER. DRAWINGS AND SPECIFICATIONS, AS INSTRUMENTS OF SERVICE, ARE ISSUED TO DESCRIBE DESIGN INTENT. THEY ARE NOT TO BE USED ON OTHER PROJECTS OR EXTENSIONS TO THIS PROJECT, EXCEPT BY AGREEMENT IN WRITING AND WITH APPROPRIATE COMPENSATION TO THE ENGINEER. CONTRACTOR, SUB-CONTRACTORS, & SUPPLIERS ARE RESPONSIBLE FOR CONFIRMING AND CORRELATING DIMENSIONS AND CONDITIONS AT THE JOB SITE, AND SHALL NOTIFY THE ENGINEER IMMEDIATELY OF ANY ERRORS OR DISCREPANCIES IN REGARD TO SUCH DRAWINGS, DESCRIBING DESIGN INTENT. SHALL NOT INDICATE EVERY DETAIL OR SYSTEM FOR CONSTRUCTION. CONTRACTOR, SUB-CONTRACTORS, AND SUPPLIERS SHALL BE RESPONSIBLE TO PROVIDE ADDITIONAL DRAWINGS AS NECESSARY FOR PERMITS, ERECTION, INSTALLATION, AND CO-ORDINATION OF ALL WORK. CONTRACTOR, SUB-CONTRACTORS, AND SUPPLIERS SHALL BE RESPONSIBLE FOR ALL LABOR AND MATERIALS REQUIRED IN ACCORDANCE WITH DESIGN INTENT. ALL MATERIALS SHALL BE NEW. UNLESS SPECIFIED OTHERWISE, AND SHALL BE INSTALLED LEVEL, PLUMB, STRAIGHT, AND TRUE TO LINE, IN ACCORDANCE WITH THE BEST PRACTICES OF THE TRADES. THE ENGINEER SHALL NOT BE RESPONSIBLE FOR CONSTRUCTION MEANS, METHODS, TECHNIQUES, SEQUENCES OR PROCEDURES, OR FOR SAFETY PRECAUTIONS AND PROGRAMS IN CONNECTION WITH THE WORK. ALL WORK SHALL BE PERFORMED IN ACCORDANCE WITH APPLICABLE CODES AND ORDINANCES.

DRAWING: 1010-pid-0017.dwg PLOTTED BY: jason PLOT DATE: ---- DRAWING LOCATION: c:\users\jason\onedrive - engineering files - 25ma02 - aromatics utility scope cold eyes review\04 - design\04 - process\pids (Border Rev1 5.16.25)

REFERENCE DRAWINGS:

REV #	DATE	DESCRIPTION	DRWN	CHKD	APVD
A	12-05-25	ISSUED FOR APPROVAL	GS	APB	PDN

REV #	DATE	DESCRIPTION	DRWN	CHKD	APVD

MOTIVA

CLIENT: MOTIVA ENTERPRISES LLC
PLANT: PORT ARTHUR REFINERY
JOB NO:

PIPING & INSTRUMENTATION DIAGRAM
DEMINERALIZED WATER PACKAGE
ANION EXCHANGER C

PROJ TITLE: AROMATICS UTILITY SCOPE REVIEW

SSP ENGINEERING & CONSULTING
13100 NORTHWEST FREEWAY
SUITE 625,
HOUSTON, TEXAS 77040

FIRM NUMBER #13619

PROJECT NO: 25MA02	SCALE: NONE
DRAWN BY: GS	CHECKED: APB
DESIGN BY:	ENG APVL: PDN
DRAWING NO: 1010-PID-0017	REV A

HE-1021

CAUSTIC DILUTION HEATER

TYPE :
RATED DUTY :
SURFACE AREA :
SHELL DESIGN PRESS @ TEMP :
TUBE DESIGN PRESS @ TEMP :
MOC (SHELL / TUBES) :
TRIM (SHELL / TUBES) : VT-1010-061-A130-N
INSULATION (SHELL / TUBES) :

GENERAL NOTES

A. FOR PIPING AND INSTRUMENTATION LEGENDS AND SYMBOLS, SEE P&IDs 0000-PID-0001 THRU 0000-PID-00XX.

B. INSTRUMENT NUMBERS ON THIS P&ID ARE PREFIXED BY THE UNIT NUMBER ASSOCIATED WITH THIS P&ID UNLESS OTHERWISE SPECIFIED.

C. CONTROL VALVES AND BYPASS SIZES ARE PRELIMINARY AND WILL BE CONFIRMED DURING DETAIL DESIGN.

NOTES

1 CAUSTIC RESISTANT LINING

1 2 CAUSTIC DILUTION HEATER CONFIGURATION IS TYPICAL. DRAWING TO BE REVISED WHEN SYSTEM IS SELECTED.

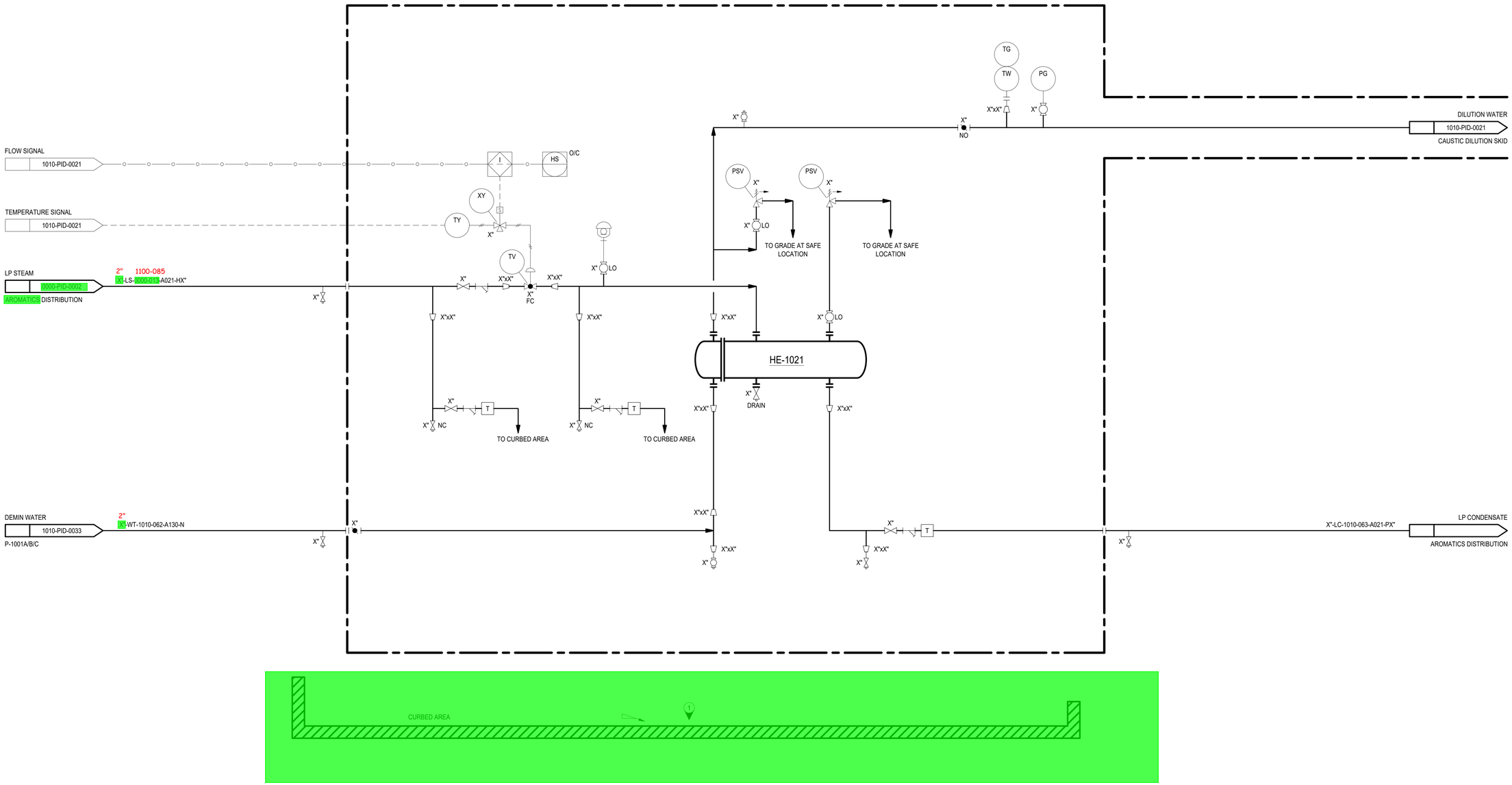

CHECK PRINT

NOT PUBLISHED. ALL RIGHTS RESERVED BY THE ENGINEER. DRAWINGS AND SPECIFICATIONS, AS INSTRUMENTS OF SERVICE, ARE ISSUED TO DESCRIBE DESIGN INTENT. THEY ARE NOT TO BE USED ON OTHER PROJECTS OR EXTENSIONS TO THIS PROJECT, EXCEPT BY AGREEMENT IN WRITING AND WITH APPROPRIATE COMPENSATION TO THE ENGINEER. CONTRACTOR, SUB-CONTRACTORS, & SUPPLIERS ARE RESPONSIBLE FOR CONFIRMING AND CORRELATING DIMENSIONS AND CONDITIONS AT THE JOB SITE, AND SHALL NOTIFY THE ENGINEER IMMEDIATELY OF ANY ERRORS OR DISCREPANCIES IN REGARD TO SUCH. DRAWINGS, DESCRIBING DESIGN INTENT, SHALL NOT INDICATE EVERY DETAIL OR SYSTEM FOR CONSTRUCTION. CONTRACTOR, SUB-CONTRACTORS, AND SUPPLIERS SHALL BE RESPONSIBLE TO PROVIDE ADDITIONAL DRAWINGS AS NECESSARY FOR PERMITS, ERECTION, INSTALLATION, AND CO-ORDINATION OF ALL WORK. CONTRACTOR, SUB-CONTRACTORS, AND SUPPLIERS SHALL BE RESPONSIBLE FOR ALL LABOR AND MATERIALS REQUIRED IN ACCORDANCE WITH DESIGN INTENT. ALL MATERIALS SHALL BE NEW, UNLESS SPECIFIED OTHERWISE, AND SHALL BE INSTALLED LEVEL, PLUMB, STRAIGHT, AND TRUE TO LINE, IN ACCORDANCE WITH THE BEST PRACTICES OF THE TRADES. THE ENGINEER SHALL NOT BE RESPONSIBLE FOR CONSTRUCTION MEANS, METHODS, TECHNIQUES, SEQUENCES OR PROCEDURES, OR FOR SAFETY PRECAUTIONS AND PROGRAMS IN CONNECTION WITH THE WORK. ALL WORK SHALL BE PERFORMED IN ACCORDANCE WITH APPLICABLE CODES AND ORDINANCES.

REFERENCE DRAWINGS:

REV #	DATE	DESCRIPTION	DRWN	CHKD	APVD
A	12-05-25	ISSUED FOR APPROVAL	GS	APB	PDN

REV #	DATE	DESCRIPTION	DRWN	CHKD	APVD

MOTIVA

CLIENT: MOTIVA ENTERPRISES LLC
PLANT: PORT ARTHUR REFINERY
JOB NO:

PIPING & INSTRUMENTATION DIAGRAM
DEMINERALIZED WATER SYSTEM
CAUSTIC DILUTION HEATER

PROJ TITLE: AROMATICS UTILITY SCOPE REVIEW

SSP ENGINEERING & CONSULTING
13100 NORTHWEST FREEWAY
SUITE 625,
HOUSTON, TEXAS 77040

FIRM NUMBER #13619

PROJECT NO: 25MA02	SCALE: NONE
DRAWN BY: GS	CHECKED: APB
DESIGN BY:	ENG APVL: PDN
DRAWING NO: 1010-PID-0019	REV A

DRAWING: 1010-pid-0019.dwg PLOTTED BY: jason PLOT DATE: ---- DRAWING LOCATION: c:\users\jason\onedrive - engineap's files - 25ma02 - aromatics utility scope cold eyes review\04 - design\04 - process\pids (Border Rev1 5.16.25)

④ ▶ TK-1021

CAUSTIC DAY TANK
SIZE ID x HEIGHT :
TOTAL VOLUME :
DESIGN PRESSURE :
DESIGN TEMP :
MOC :
TRIM : VT-1010-069-A130-N
INSULATION / TRACING :

④ ▶ P-1021 A/B

CAUSTIC DOSING PUMP
RATED CAPACITY :
DIFFERENTIAL PRESSURE :
RATED POWER :
MOC (CASING / INTERNAL) :
INSULATION / TRACING :
TRIM : VT-1010-070-A130-N
SEAL PLAN :

GENERAL NOTES

A. FOR PIPING AND INSTRUMENTATION LEGENDS AND SYMBOLS, SEE P&IDs 0000-PID-0001 THRU 0000-PID-00XX.
B. INSTRUMENT NUMBERS ON THIS P&ID ARE PREFIXED BY THE UNIT NUMBER ASSOCIATED WITH THIS P&ID UNLESS OTHERWISE SPECIFIED.
C. CONTROL VALVES AND BYPASS SIZES ARE PRELIMINARY AND WILL BE CONFIRMED DURING DETAIL DESIGN.

NOTES

1. PROVIDED BY CONTRACTOR.
2. VALVE STEM IS ACCESSIBLE FRON GRADE.
3. CAUSTIC RESISTANCE LINING.
4. CAUSTIC DILUTION SYSTEM SHOWN IS TYPICAL. EXACT CONFIGURATION WILL BE REVISED ONCE SYSTEM IS SELECTED.

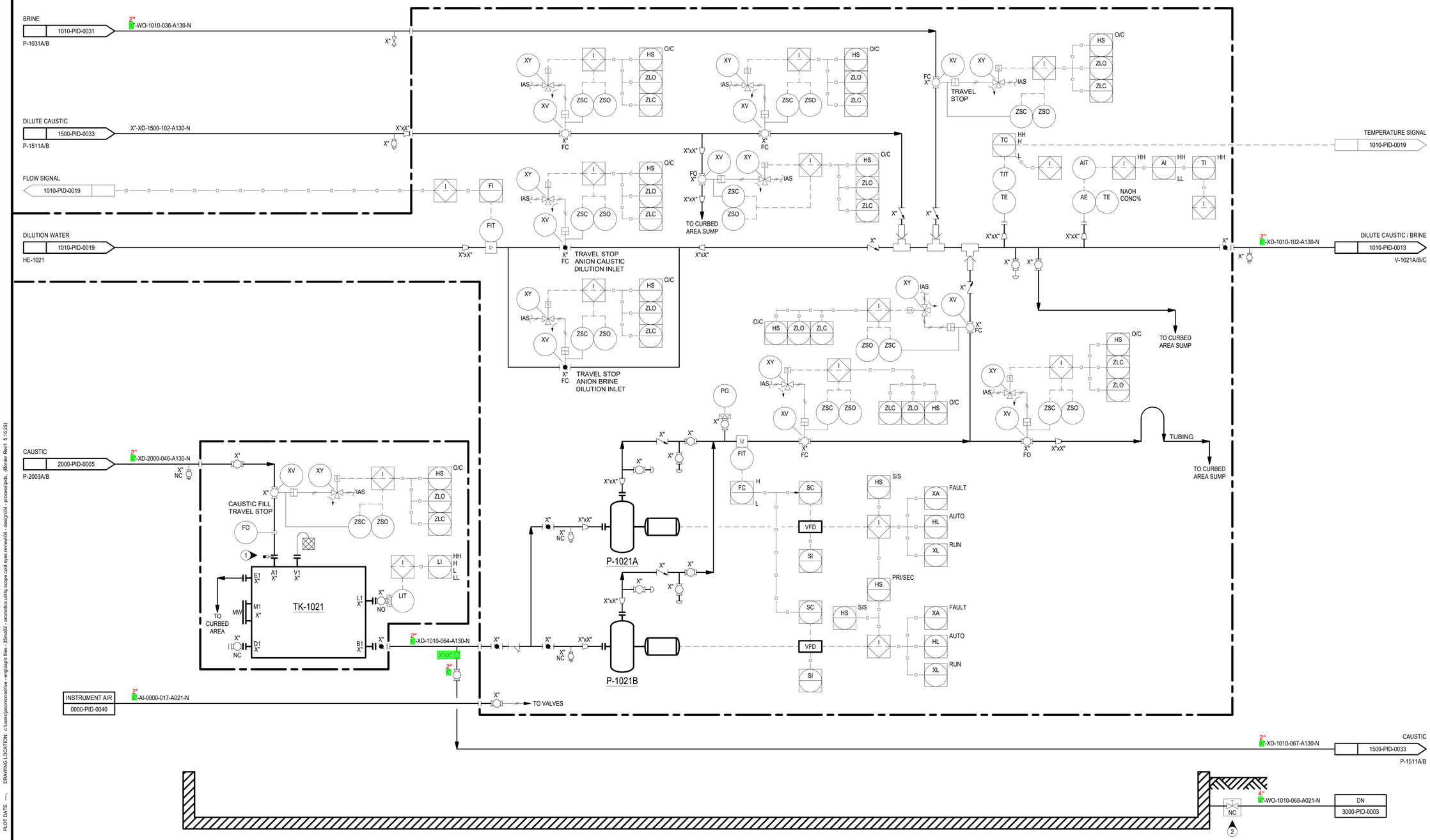

CHECK PRINT

NOT PUBLISHED. ALL RIGHTS RESERVED BY THE ENGINEER. DRAWINGS AND SPECIFICATIONS, AS INSTRUMENTS OF SERVICE, ARE ISSUED TO DESCRIBE DESIGN INTENT. THEY ARE NOT TO BE USED ON OTHER PROJECTS OR EXTENSIONS TO THIS PROJECT, EXCEPT BY AGREEMENT IN WRITING AND WITH APPROPRIATE COMPENSATION TO THE ENGINEER. CONTRACTOR, SUB-CONTRACTORS, & SUPPLIERS ARE RESPONSIBLE FOR CONFIRMING AND CORRELATING DIMENSIONS AND CONDITIONS AT THE JOB SITE, AND SHALL NOTIFY THE ENGINEER IMMEDIATELY OF ANY ERRORS OR DISCREPANCIES IN REGARD TO SUCH. DRAWINGS, DESCRIBING DESIGN INTENT, SHALL NOT INDICATE EVERY DETAIL OR SYSTEM FOR CONSTRUCTION. CONTRACTOR, SUB-CONTRACTORS, AND SUPPLIERS SHALL BE RESPONSIBLE TO PROVIDE ADDITIONAL DRAWINGS AS NECESSARY FOR PERMITS, ERECTION, INSTALLATION, AND CO-ORDINATION OF ALL WORK. CONTRACTOR, SUB-CONTRACTORS, AND SUPPLIERS SHALL BE RESPONSIBLE FOR ALL LABOR AND MATERIALS REQUIRED IN ACCORDANCE WITH DESIGN INTENT. ALL MATERIALS SHALL BE NEW, UNLESS SPECIFIED OTHERWISE, AND SHALL BE INSTALLED LEVEL, PLUMB, STRAIGHT, AND TRUE TO LINE, IN ACCORDANCE WITH THE BEST PRACTICES OF THE TRADES. THE ENGINEER SHALL NOT BE RESPONSIBLE FOR CONSTRUCTION MEANS, METHODS, TECHNIQUES, SEQUENCES OR PROCEDURES, OR FOR SAFETY PRECAUTIONS AND PROGRAMS IN CONNECTION WITH THE WORK. ALL WORK SHALL BE PERFORMED IN ACCORDANCE WITH APPLICABLE CODES AND ORDINANCES.

REFERENCE DRAWINGS:

REV #	DATE	DESCRIPTION	DRWN	CHKD	APVD
A	12-05-25	ISSUED FOR APPROVAL	GS	APB	PDN

REV #	DATE	DESCRIPTION	DRWN	CHKD	APVD

MOTIVA

CLIENT: MOTIVA ENTERPRISES LLC
PLANT: PORT ARTHUR REFINERY
JOB NO:

PIPING & INSTRUMENTATION DIAGRAM

DEMINERALIZED WATER SYSTEM
CAUSTIC DILUTION SYSTEM

PROJ TITLE: AROMATICS UTILITY SCOPE REVIEW

SSP ENGINEERING & CONSULTING
13100 NORTHWEST FREEWAY
SUITE 625
HOUSTON, TEXAS 77040

FIRM NUMBER #13619

PROJECT NO: 25MA02	SCALE: NONE
DRAWN BY: GS	CHECKED: APB
DESIGN BY:	ENG APVL: PDN
DRAWING NO: 1010-PID-0021	REV A

DRAWING: 1010-pid-0021.dwg, PLOTTED BY: jason, PLOT DATE: ----, DRAWING LOCATION: c:\users\jason\onedrive - engineering\ssp's files - 25ma02 - aromatics utility scope cold eyes review\04 - design\04 - process\pids, (Border Rev1 5.16.25)

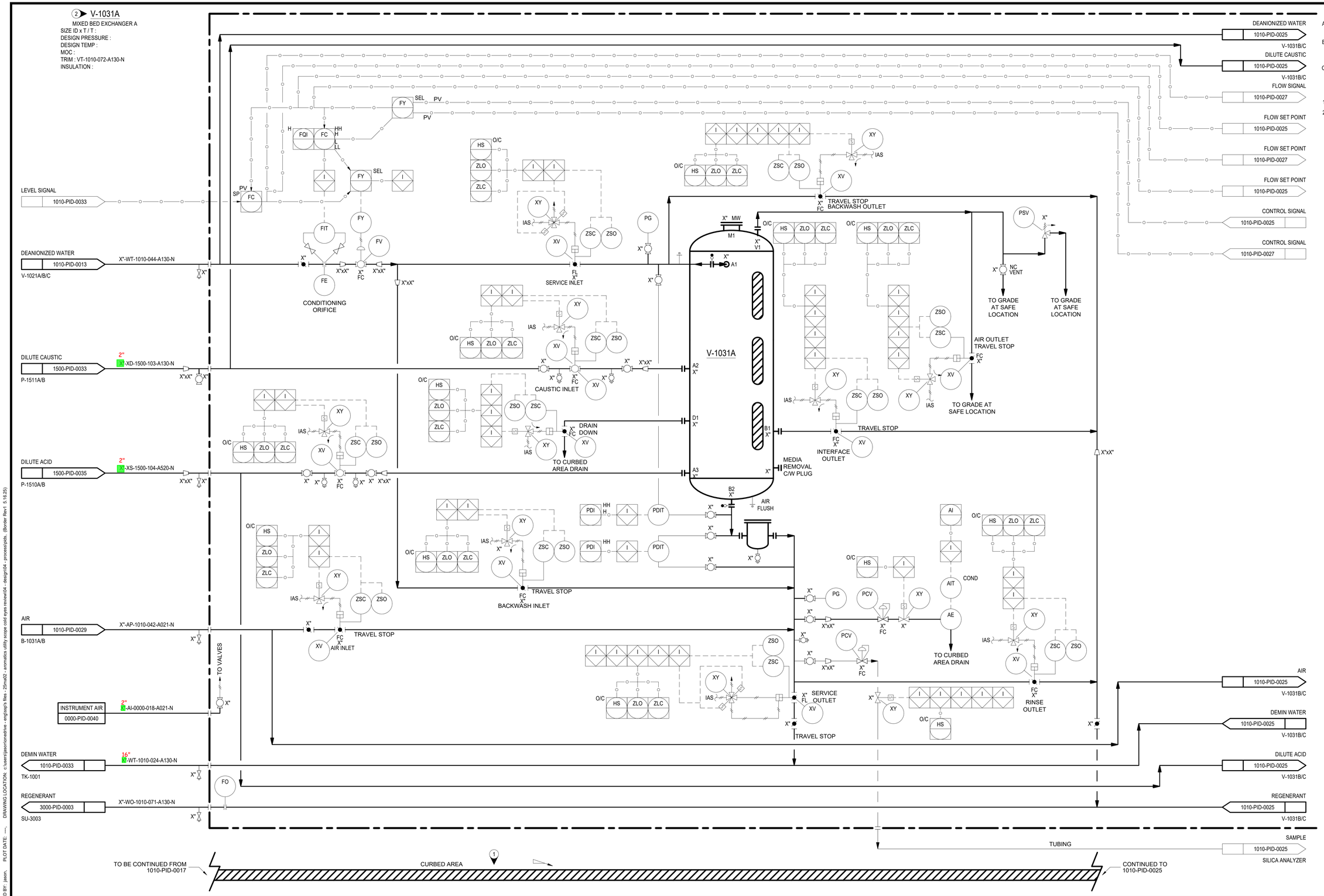

GENERAL NOTES

A. FOR PIPING AND INSTRUMENTATION LEGENDS AND SYMBOLS, SEE P&IDs 0000-PID-0001 THRU 0000-PID-00XX.

B. INSTRUMENT NUMBERS ON THIS P&ID ARE PREFIXED BY THE UNIT NUMBER ASSOCIATED WITH THIS P&ID UNLESS OTHERWISE SPECIFIED.

C. CONTROL VALVES AND BYPASS SIZES ARE PRELIMINARY AND WILL BE CONFIRMED DURING DETAIL DESIGN.

NOTES

1. ACID AND CAUSTIC RESISTANT LINING.
2. MIXED BED POLISHER SHOWN IS TYPICAL. EXACT CONFIGURATION WILL BE REVISED ONCE SYSTEM IS SELECTED.

CHECK PRINT

NOT PUBLISHED, ALL RIGHTS RESERVED BY THE ENGINEER. DRAWINGS AND SPECIFICATIONS, AS INSTRUMENTS OF SERVICE, ARE ISSUED TO DESCRIBE DESIGN INTENT. THEY ARE NOT TO BE USED ON OTHER PROJECTS OR EXTENSIONS TO THIS PROJECT, EXCEPT BY AGREEMENT IN WRITING AND WITH APPROPRIATE COMPENSATION TO THE ENGINEER. CONTRACTOR, SUB-CONTRACTORS, & SUPPLIERS ARE RESPONSIBLE FOR CONFIRMING AND CORRELATING DIMENSIONS AND CONDITIONS AT THE JOB SITE, AND SHALL NOTIFY THE ENGINEER IMMEDIATELY OF ANY ERRORS OR DISCREPANCIES IN REGARD TO SUCH DRAWINGS, DESCRIBING DESIGN INTENT. SHALL NOT INDICATE EVERY DETAIL OR SYSTEM FOR CONSTRUCTION. CONTRACTOR, SUB-CONTRACTORS, AND SUPPLIERS SHALL BE RESPONSIBLE TO PROVIDE ADDITIONAL DRAWINGS AS NECESSARY FOR PERMITS, ERECTION, INSTALLATION, AND CO-ORDINATION OF ALL WORK. CONTRACTOR, SUB-CONTRACTORS, AND SUPPLIERS SHALL BE RESPONSIBLE FOR ALL LABOR AND MATERIALS REQUIRED IN ACCORDANCE WITH DESIGN INTENT. ALL MATERIALS SHALL BE NEW, UNLESS SPECIFIED OTHERWISE, AND SHALL BE INSTALLED LEVEL, PLUMB, STRAIGHT, AND TRUE TO LINE, IN ACCORDANCE WITH THE BEST PRACTICES OF THE TRADES. THE ENGINEER SHALL NOT BE RESPONSIBLE FOR CONSTRUCTION MEANS, METHODS, TECHNIQUES, SEQUENCES OR PROCEDURES, OR FOR SAFETY PRECAUTIONS AND PROGRAMS IN CONNECTION WITH THE WORK. ALL WORK SHALL BE PERFORMED IN ACCORDANCE WITH APPLICABLE CODES AND ORDINANCES.

REFERENCE DRAWINGS:

REV #	DATE	DESCRIPTION	DRWN	CHKD	APVD
A	12-05-25	ISSUED FOR APPROVAL	GS	APB	PDN

REV #	DATE	DESCRIPTION	DRWN	CHKD	APVD

MOTIVA

CLIENT: MOTIVA ENTERPRISES LLC
PLANT: PORT ARTHUR REFINERY
JOB NO:

PIPING & INSTRUMENTATION DIAGRAM

DEMINERALIZED WATER PACKAGE
MIXED BED EXCHANGER A

PROJ TITLE: AROMATICS UTILITY SCOPE REVIEW

SSP ENGINEERING & CONSULTING
13100 NORTHWEST FREEWAY
SUITE 625,
HOUSTON, TEXAS 77040

FIRM NUMBER #13619

PROJECT NO: 25MA02	SCALE: NONE
DRAWN BY: GS	CHECKED: APB
DESIGN BY:	ENG APVL: PDN
DRAWING NO: 1010-PID-0023	REV A

DRAWING: 1010-pid-0023.dwg, PLOTTED BY: jason, PLOT DATE: ----, DRAWING LOCATION: c:\users\jason\onedrive - engineap's files - 25ma02 - aromatics utility scope cold eyes review\04 - design\04 - process\pids, (Border Rev1 5.16.25)

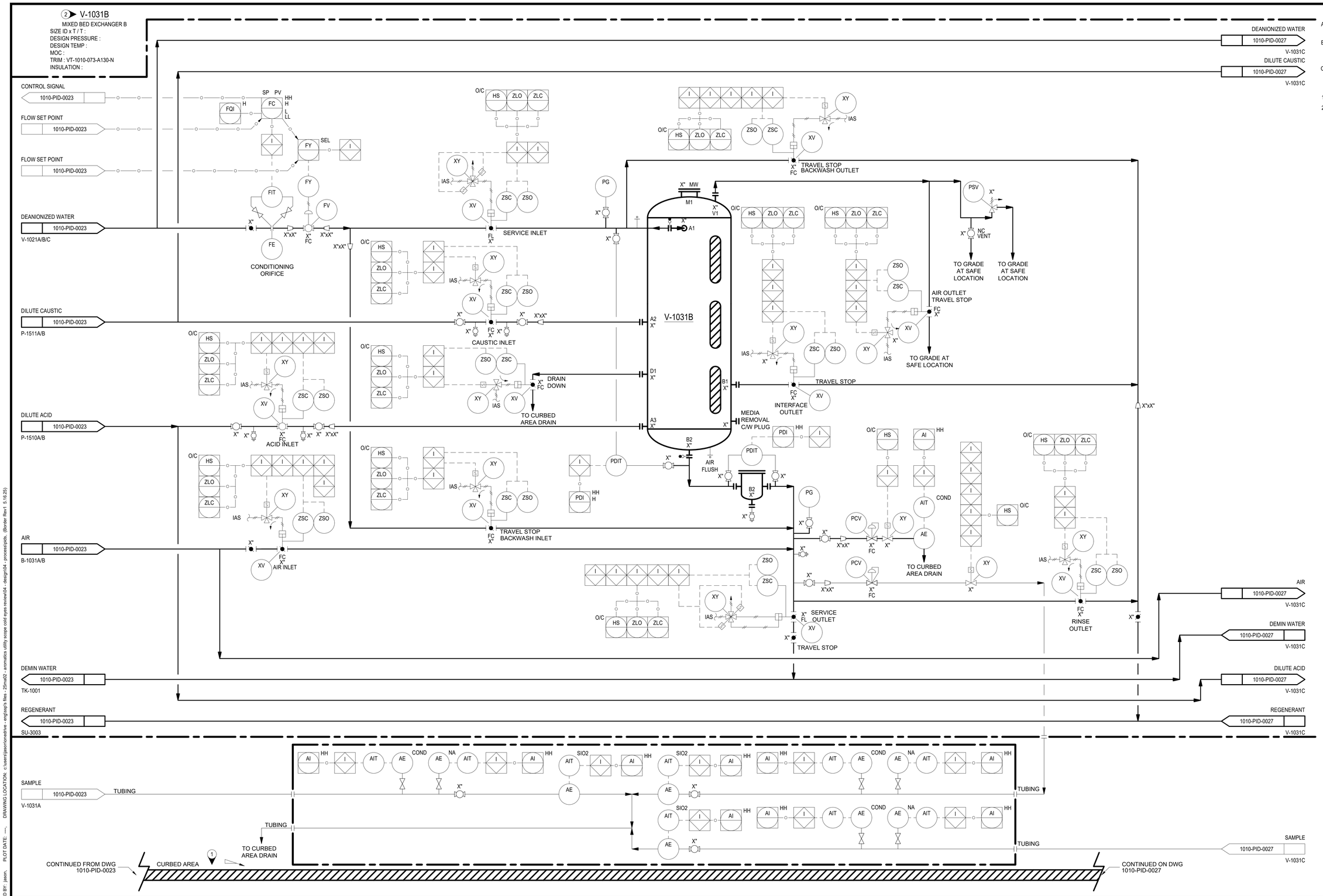

GENERAL NOTES

A. FOR PIPING AND INSTRUMENTATION LEGENDS AND SYMBOLS, SEE P&IDs 0000-PID-0001 THRU 0000-PID-00XX.

B. INSTRUMENT NUMBERS ON THIS P&ID ARE PREFIXED BY THE UNIT NUMBER ASSOCIATED WITH THIS P&ID UNLESS OTHERWISE SPECIFIED.

C. CONTROL VALVES AND BYPASS SIZES ARE PRELIMINARY AND WILL BE CONFIRMED DURING DETAIL DESIGN.

NOTES

1. ACID RESISTANT AND CAUSTIC RESISTANT LINING.
2. MIXED BED POLISHER SHOWN IS TYPICAL. EXACT CONFIGURATION WILL BE REVISED ONCE SYSTEM IS SELECTED.

CHECK PRINT

NOT PUBLISHED. ALL RIGHTS RESERVED BY THE ENGINEER. DRAWINGS AND SPECIFICATIONS, AS INSTRUMENTS OF SERVICE, ARE ISSUED TO DESCRIBE DESIGN INTENT. THEY ARE NOT TO BE USED ON OTHER PROJECTS OR EXTENSIONS TO THIS PROJECT, EXCEPT BY AGREEMENT IN WRITING AND WITH APPROPRIATE COMPENSATION TO THE ENGINEER. CONTRACTOR, SUB-CONTRACTORS, & SUPPLIERS ARE RESPONSIBLE FOR CONFIRMING AND CORRELATING DIMENSIONS AND CONDITIONS AT THE JOB SITE, AND SHALL NOTIFY THE ENGINEER IMMEDIATELY OF ANY ERRORS OR DISCREPANCIES IN REGARD TO SUCH. DRAWINGS, DESCRIBING DESIGN INTENT, SHALL NOT INDICATE EVERY DETAIL OR SYSTEM FOR CONSTRUCTION. CONTRACTOR, SUB-CONTRACTORS, AND SUPPLIERS SHALL BE RESPONSIBLE TO PROVIDE ADDITIONAL DRAWINGS AS NECESSARY FOR PERMITS, ERECTION, INSTALLATION, AND CO-ORDINATION OF ALL WORK. CONTRACTOR, SUB-CONTRACTORS, AND SUPPLIERS SHALL BE RESPONSIBLE FOR ALL LABOR AND MATERIALS REQUIRED IN ACCORDANCE WITH DESIGN INTENT. ALL MATERIALS SHALL BE NEW, UNLESS SPECIFIED OTHERWISE, AND SHALL BE INSTALLED LEVEL, PLUMB, STRAIGHT, AND TRUE TO LINE, IN ACCORDANCE WITH THE BEST PRACTICES OF THE TRADES. THE ENGINEER SHALL NOT BE RESPONSIBLE FOR CONSTRUCTION MEANS, METHODS, TECHNIQUES, SEQUENCES OR PROCEDURES, OR FOR SAFETY PRECAUTIONS AND PROGRAMS IN CONNECTION WITH THE WORK. ALL WORK SHALL BE PERFORMED IN ACCORDANCE WITH APPLICABLE CODES AND ORDINANCES.

REFERENCE DRAWINGS:

REV #	DATE	DESCRIPTION	DRWN	CHKD	APVD
A	12-05-25	ISSUED FOR APPROVAL	GS	APB	PDN

REV #	DATE	DESCRIPTION	DRWN	CHKD	APVD

MOTIVA

CLIENT: MOTIVA ENTERPRISES LLC
PLANT: PORT ARTHUR REFINERY
JOB NO:

PIPING & INSTRUMENTATION DIAGRAM

DEMINERALIZED WATER PACKAGE
MIXED BED EXCHANGER B

PROJ TITLE: AROMATICS UTILITY SCOPE REVIEW

SSP ENGINEERING & CONSULTING
13100 NORTHWEST FREEWAY
SUITE 625,
HOUSTON, TEXAS 77040

FIRM NUMBER #13619

PROJECT NO: 25MA02	SCALE: NONE
DRAWN BY: GS	CHECKED: APB
DESIGN BY:	ENG APVL: PDN
DRAWING NO: 1010-PID-0025	REV A

DRAWING: 1010-pid-0025.dwg PLOTTED BY: jason. PLOT DATE: ---- DRAWING LOCATION: c:\users\jason\onedrive - engineap's files - 25ma02 - aromatics utility scope cold eyes review\04 - design\04 - process\pids. (Border Rev1 5.16.25)

② V-1031C
MIXED BED EXCHANGER C
SIZE ID x T / T :
DESIGN PRESSURE :
DESIGN TEMP :
MOC :
TRIM : VT-1010-066-A130-N
INSULATION :

GENERAL NOTES

A. FOR PIPING AND INSTRUMENTATION LEGENDS AND SYMBOLS, SEE P&IDs 0000-PID-0001 THRU 0000-PID-00XX.

B. INSTRUMENT NUMBERS ON THIS P&ID ARE PREFIXED BY THE UNIT NUMBER ASSOCIATED WITH THIS P&ID UNLESS OTHERWISE SPECIFIED.

C. CONTROL VALVES AND BYPASS SIZES ARE PRELIMINARY AND WILL BE CONFIRMED DURING DETAIL DESIGN.

NOTES

1. ACID RESISTANT AND CAUSTIC RESISTANT LINING.
2. MIXED BED POLISHER SHOWN IS TYPICAL. EXACT CONFIGURATION WILL BE REVISED ONCE SYSTEM IS SELECTED.

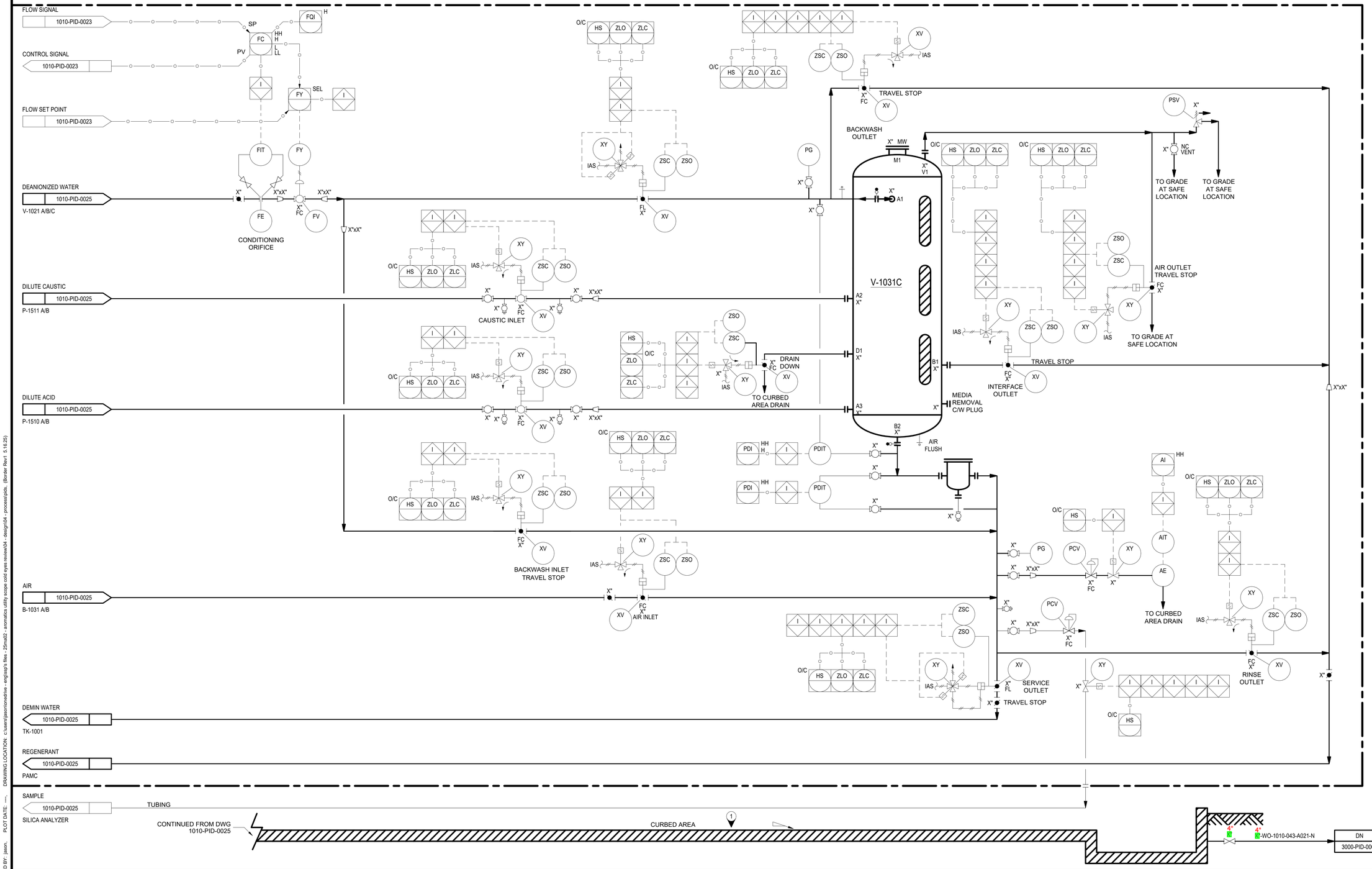

CHECK PRINT

NOT PUBLISHED, ALL RIGHTS RESERVED BY THE ENGINEER. DRAWINGS AND SPECIFICATIONS, AS INSTRUMENTS OF SERVICE, ARE ISSUED TO DESCRIBE DESIGN INTENT. THEY ARE NOT TO BE USED ON OTHER PROJECTS OR EXTENSIONS TO THIS PROJECT, EXCEPT BY AGREEMENT IN WRITING AND WITH APPROPRIATE COMPENSATION TO THE ENGINEER. CONTRACTOR, SUB-CONTRACTORS, & SUPPLIERS ARE RESPONSIBLE FOR CONFIRMING AND CORRELATING DIMENSIONS AND CONDITIONS AT THE JOB SITE, AND SHALL NOTIFY THE ENGINEER IMMEDIATELY OF ANY ERRORS OR DISCREPANCIES IN REGARD TO SUCH DRAWINGS, DESCRIBING DESIGN INTENT. SHALL NOT INDICATE EVERY DETAIL OR SYSTEM FOR CONSTRUCTION. CONTRACTOR, SUB-CONTRACTORS, AND SUPPLIERS SHALL BE RESPONSIBLE TO PROVIDE ADDITIONAL DRAWINGS AS NECESSARY FOR PERMITS, ERECTION, INSTALLATION, AND CO-ORDINATION OF ALL WORK. CONTRACTOR, SUB-CONTRACTORS, AND SUPPLIERS SHALL BE RESPONSIBLE FOR ALL LABOR AND MATERIALS REQUIRED IN ACCORDANCE WITH DESIGN INTENT. ALL MATERIALS SHALL BE NEW, UNLESS SPECIFIED OTHERWISE, AND SHALL BE INSTALLED LEVEL, PLUMB, STRAIGHT, AND TRUE TO LINE, IN ACCORDANCE WITH THE BEST PRACTICES OF THE TRADES. THE ENGINEER SHALL NOT BE RESPONSIBLE FOR CONSTRUCTION MEANS, METHODS, TECHNIQUES, SEQUENCES OR PROCEDURES, OR FOR SAFETY PRECAUTIONS AND PROGRAMS IN CONNECTION WITH THE WORK. ALL WORK SHALL BE PERFORMED IN ACCORDANCE WITH APPLICABLE CODES AND ORDINANCES.

REFERENCE DRAWINGS:

REV #	DATE	DESCRIPTION	DRWN	CHKD	APVD
A	12-05-25	ISSUED FOR APPROVAL	GS	APB	PDN

REV #	DATE	DESCRIPTION	DRWN	CHKD	APVD

MOTIVA

CLIENT: MOTIVA ENTERPRISES LLC
PLANT: PORT ARTHUR REFINERY
JOB NO:

PIPING & INSTRUMENTATION DIAGRAM
DEMINERALIZED WATER PACKAGE
MIXED BED EXCHANGER C

PROJ TITLE: AROMATICS UTILITY SCOPE REVIEW

SSP ENGINEERING & CONSULTING
13100 NORTHWEST FREEWAY
SUITE 625,
HOUSTON, TEXAS 77040

FIRM NUMBER #13619

PROJECT NO: 25MA02	SCALE: NONE
DRAWN BY: GS	CHECKED: APB
DESIGN BY:	ENG APVL: PDN
DRAWING NO: 1010-PID-0027	REV A

DRAWING: 1010-pid-0027.dwg, PLOTTED BY: jason, PLOT DATE: ----, DRAWING LOCATION: c:\users\jason\onedrive - eng\sap's files - 25ma02 - aromatics utility scope cold eyes review\04 - design\04 - process\pids, (Border Rev1 5.16.25)

GENERAL NOTES

A. FOR PIPING AND INSTRUMENTATION LEGENDS AND SYMBOLS, SEE P&IDs 0000-PID-0001 THRU 0000-PID-00XX.

B. INSTRUMENT NUMBERS ON THIS P&ID ARE PREFIXED BY THE UNIT NUMBER ASSOCIATED WITH THIS P&ID UNLESS OTHERWISE SPECIFIED.

C. CONTROL VALVES AND BYPASS SIZES ARE PRELIMINARY AND WILL BE CONFIRMED DURING DETAIL DESIGN.

NOTES

1. MIXED BED SCOUR BLOWERS ALTERNATE DUTY AFTER EACH USE.
2. MIXED BED SCOUR BLOWERS CONFIGURATION IS TYPICAL. DRAWING TO BE REVISED WHEN SYSTEM IS SELECTED.

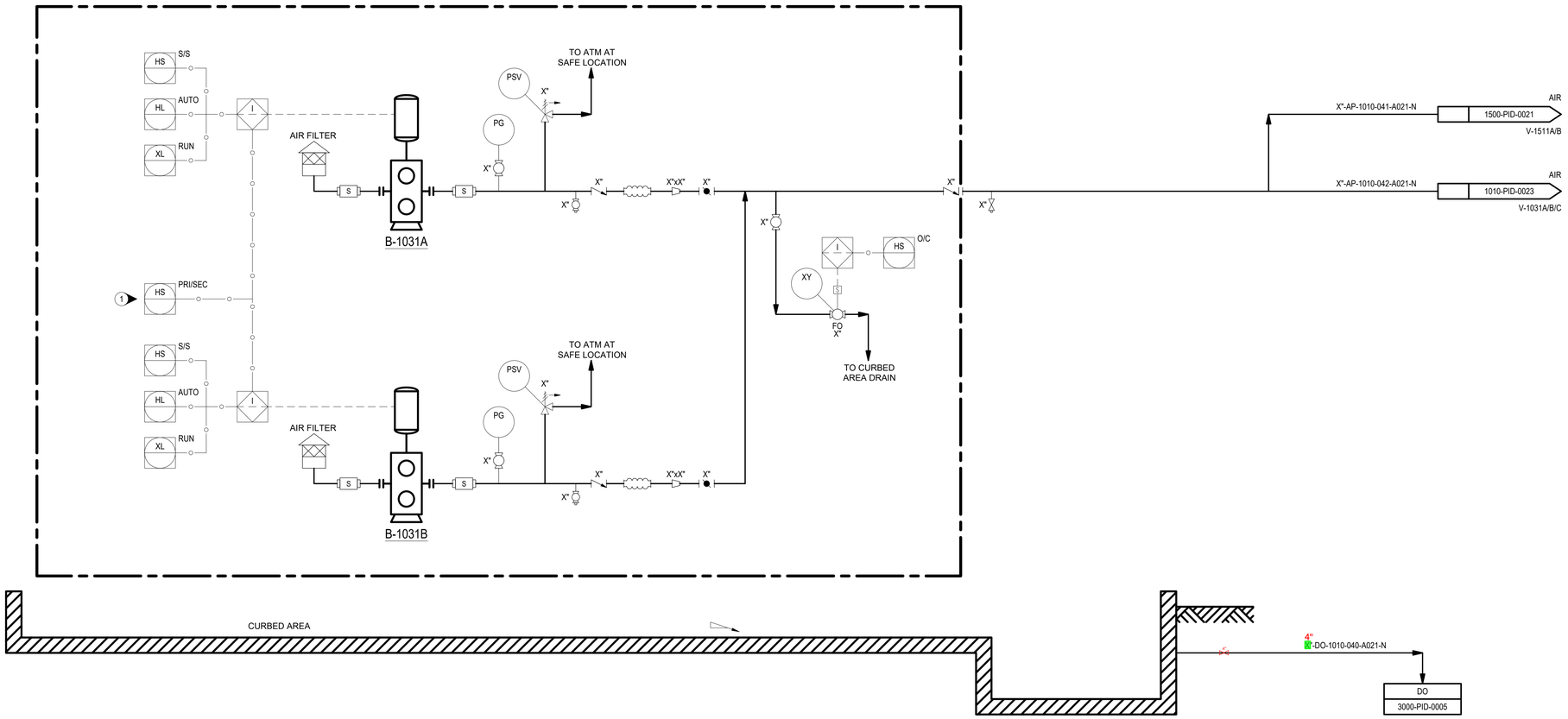

B-1031A/B

MIXED BED AIR SCOUR BLOWERS
RATED CAPACITY :
DIFFERENTIAL PRESSURE :
RATED POWER :
MOC (CASING / INTERNAL) :
INSULATION / TRACING :
TRIM : VT-1010-065-A130-N
SEAL PLAN :

CHECK PRINT

NOT PUBLISHED, ALL RIGHTS RESERVED BY THE ENGINEER. DRAWINGS AND SPECIFICATIONS, AS INSTRUMENTS OF SERVICE, ARE ISSUED TO DESCRIBE DESIGN INTENT. THEY ARE NOT TO BE USED ON OTHER PROJECTS OR EXTENSIONS TO THIS PROJECT, EXCEPT BY AGREEMENT IN WRITING AND WITH APPROPRIATE COMPENSATION TO THE ENGINEER. CONTRACTOR, SUB-CONTRACTORS, & SUPPLIERS ARE RESPONSIBLE FOR CONFIRMING AND CORRELATING DIMENSIONS AND CONDITIONS AT THE JOB SITE, AND SHALL NOTIFY THE ENGINEER IMMEDIATELY OF ANY ERRORS OR DISCREPANCIES IN REGARD TO SUCH DRAWINGS, DESCRIBING DESIGN INTENT. SHALL NOT INDICATE EVERY DETAIL OR SYSTEM FOR CONSTRUCTION. CONTRACTOR, SUB-CONTRACTORS, AND SUPPLIERS SHALL BE RESPONSIBLE TO PROVIDE ADDITIONAL DRAWINGS AS NECESSARY FOR PERMITS, ERECTION, INSTALLATION, AND CO-ORDINATION OF ALL WORK. CONTRACTOR, SUB-CONTRACTORS, AND SUPPLIERS SHALL BE RESPONSIBLE FOR ALL LABOR AND MATERIALS REQUIRED IN ACCORDANCE WITH DESIGN INTENT. ALL MATERIALS SHALL BE NEW, UNLESS SPECIFIED OTHERWISE, AND SHALL BE INSTALLED LEVEL, PLUMB, STRAIGHT, AND TRUE TO LINE, IN ACCORDANCE WITH THE BEST PRACTICES OF THE TRADES. THE ENGINEER SHALL NOT BE RESPONSIBLE FOR CONSTRUCTION MEANS, METHODS, TECHNIQUES, SEQUENCES OR PROCEDURES, OR FOR SAFETY PRECAUTIONS AND PROGRAMS IN CONNECTION WITH THE WORK. ALL WORK SHALL BE PERFORMED IN ACCORDANCE WITH APPLICABLE CODES AND ORDINANCES.

REFERENCE DRAWINGS:

REV #	DATE	DESCRIPTION	DRWN	CHKD	APVD
A	12-05-25	ISSUED FOR APPROVAL	GS	APB	PDN

REV #	DATE	DESCRIPTION	DRWN	CHKD	APVD

MOTIVA

CLIENT: MOTIVA ENTERPRISES LLC
PLANT: PORT ARTHUR REFINERY
JOB NO:

PIPING & INSTRUMENTATION DIAGRAM
DEMINERALIZED WATER PACKAGE
MIXED BED AIR SCOUR BLOWERS

PROJ TITLE: AROMATICS UTILITY SCOPE REVIEW

SSP ENGINEERING & CONSULTING
13100 NORTHWEST FREEWAY
SUITE 625,
HOUSTON, TEXAS 77040

FIRM NUMBER #13619

PROJECT NO: 25MA02	SCALE: NONE
DRAWN BY: GS	CHECKED: APB
DESIGN BY:	ENG APVL: PDN
DRAWING NO: 1010-PID-0029	REV A

DRAWING: 1010-pid-0029.dwg, PLOTTED BY: jason, PLOT DATE: ----, DRAWING LOCATION: c:\users\jason\onedrive - eng\sap's files - 25ma02 - aromatics utility scope cold eyes review\04 - design\04 - process\pids, (Border Rev1 5.16.25)

TK-1031

BRINE MEASURING TANK
SIZE ID x HEIGHT :
TOTAL VOLUME :
DESIGN PRESSURE :
DESIGN TEMP :
MOC :
TRIM : VT-1010-037-A130-N
INSULATION / TRACING :

GENERAL NOTES

A. FOR PIPING AND INSTRUMENTATION LEGENDS AND SYMBOLS, SEE P&IDs 0000-PID-0001 THRU 0000-PID-00XX.
B. INSTRUMENT NUMBERS ON THIS P&ID ARE PREFIXED BY THE UNIT NUMBER ASSOCIATED WITH THIS P&ID UNLESS OTHERWISE SPECIFIED.
C. CONTROL VALVES AND BYPASS SIZES ARE PRELIMINARY AND WILL BE CONFIRMED DURING DETAIL DESIGN.

NOTES

1. PUMPS ALTERNATE AFTER EVERY BRINE INJECTION.
2. BRINE SYSTEM CONFIGURATION IS TYPICAL. DRAWING TO BE REVISED WHEN SYSTEM IS SELECTED.

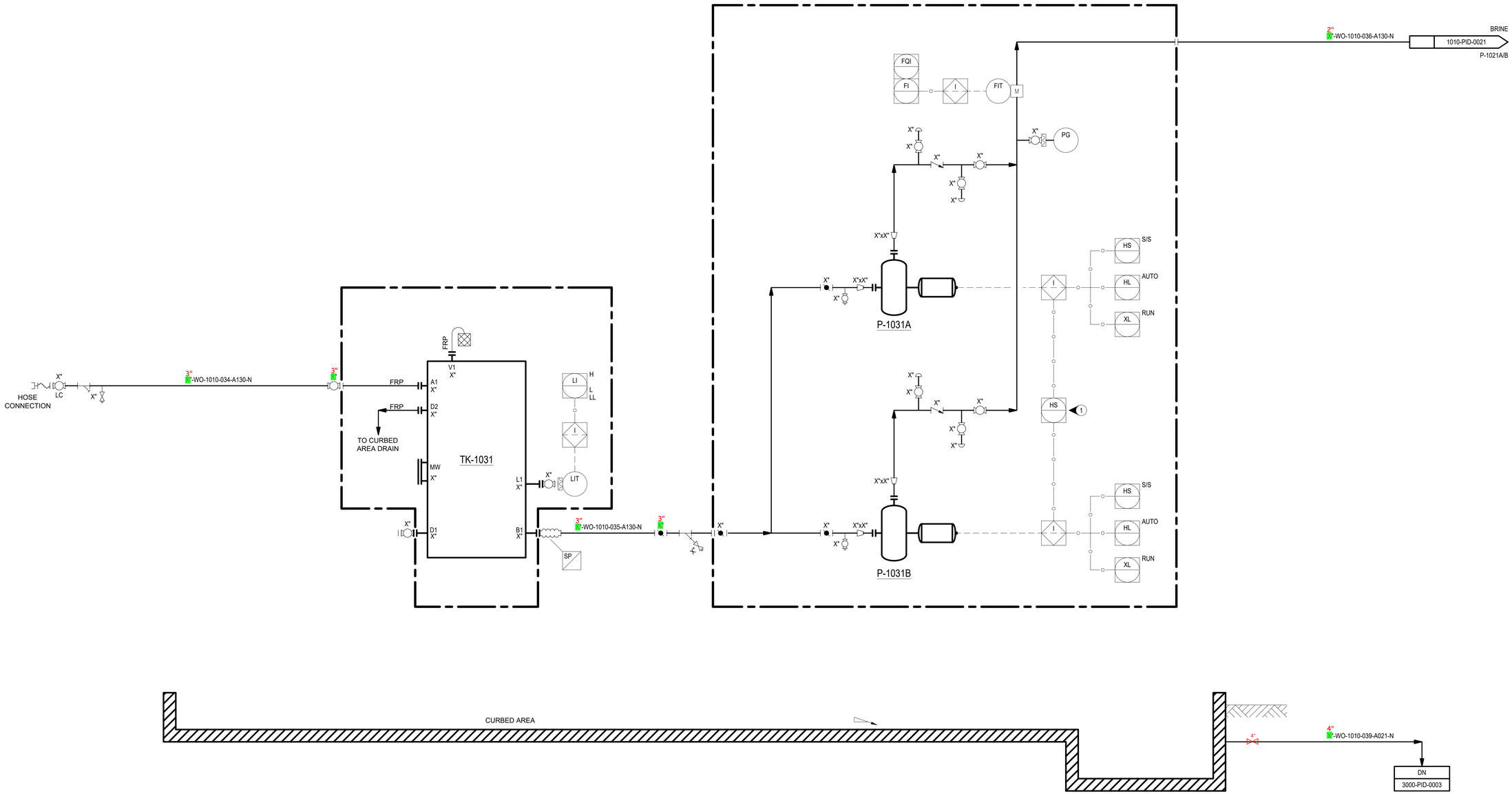

P-1031 A/B

BRINE TRANSFER PUMPS
RATED CAPACITY :
DIFFERENTIAL PRESSURE :
RATED POWER :
MOC (CASING / INTERNAL) :
INSULATION / TRACING :
TRIM : VT-1010-038-A130-N
SEAL PLAN :

CHECK PRINT

NOT PUBLISHED, ALL RIGHTS RESERVED BY THE ENGINEER. DRAWINGS AND SPECIFICATIONS, AS INSTRUMENTS OF SERVICE, ARE ISSUED TO DESCRIBE DESIGN INTENT. THEY ARE NOT TO BE USED ON OTHER PROJECTS OR EXTENSIONS TO THIS PROJECT, EXCEPT BY AGREEMENT IN WRITING AND WITH APPROPRIATE COMPENSATION TO THE ENGINEER. CONTRACTOR, SUB-CONTRACTORS, & SUPPLIERS ARE RESPONSIBLE FOR CONFIRMING AND CORRELATING DIMENSIONS AND CONDITIONS AT THE JOB SITE, AND SHALL NOTIFY THE ENGINEER IMMEDIATELY OF ANY ERRORS OR DISCREPANCIES IN REGARD TO SUCH DRAWINGS, DESCRIBING DESIGN INTENT, SHALL NOT INDICATE EVERY DETAIL OR SYSTEM FOR CONSTRUCTION. CONTRACTOR, SUB-CONTRACTORS, AND SUPPLIERS SHALL BE RESPONSIBLE TO PROVIDE ADDITIONAL DRAWINGS AS NECESSARY FOR PERMITS, ERECTION, INSTALLATION, AND CO-ORDINATION OF ALL WORK. CONTRACTOR, SUB-CONTRACTORS, AND SUPPLIERS SHALL BE RESPONSIBLE FOR ALL LABOR AND MATERIALS REQUIRED IN ACCORDANCE WITH DESIGN INTENT. ALL MATERIALS SHALL BE NEW, UNLESS SPECIFIED OTHERWISE, AND SHALL BE INSTALLED LEVEL, PLUMB, STRAIGHT, AND TRUE TO LINE, IN ACCORDANCE WITH THE BEST PRACTICES OF THE TRADES. THE ENGINEER SHALL NOT BE RESPONSIBLE FOR CONSTRUCTION MEANS, METHODS, TECHNIQUES, SEQUENCES OR PROCEDURES, OR FOR SAFETY PRECAUTIONS AND PROGRAMS IN CONNECTION WITH THE WORK. ALL WORK SHALL BE PERFORMED IN ACCORDANCE WITH APPLICABLE CODES AND ORDINANCES.

REFERENCE DRAWINGS:

REV #	DATE	DESCRIPTION	DRWN	CHKD	APVD
A	12-05-25	ISSUED FOR APPROVAL	GS	APB	PDN

REV #	DATE	DESCRIPTION	DRWN	CHKD	APVD

MOTIVA

CLIENT: MOTIVA ENTERPRISES LLC
PLANT: PORT ARTHUR REFINERY
JOB NO:

PIPING & INSTRUMENTATION DIAGRAM
DEMINERALIZER WATER PACKAGE
BRINE SYSTEM

PROJ TITLE: AROMATICS UTILITY SCOPE REVIEW

SSP ENGINEERING & CONSULTING
13100 NORTHWEST FREEWAY
SUITE 625,
HOUSTON, TEXAS 77040

FIRM NUMBER #13619

PROJECT NO: 25MA02	SCALE: NONE
DRAWN BY: GS	CHECKED: APB
DESIGN BY:	ENG APVL: PDN
DRAWING NO: 1010-PID-0031	REV A

DRAWING: 1010-pid-0031.dwg PLOTTED BY: jason. PLOT DATE: ---- DRAWING LOCATION: c:\users\jasontonsfeine - engtap's files - 25ma02 - aromatics utility scope cold eyes review\04 - design\04 - process\pids. (Border Rev1 5.16.25)

TK-1001

DEMIN WATER TANK
SIZE ID x HEIGHT :
TOTAL VOLUME :
DESIGN PRESSURE :
DESIGN TEMP :
MOC :
TRIM : VT-1010-032-A130-N
INSULATION / TRACING :

P-1001A/B/C

DEMIN WATER PUMPS
RATED CAPACITY :
DIFFERENTIAL PRESSURE :
RATED POWER :
MOC (CASING / INTERNAL) :
INSULATION / TRACING :
TRIM : VT-1010-033-A130-N
SEAL PLAN :

GENERAL NOTES

A. FOR PIPING AND INSTRUMENTATION LEGENDS AND SYMBOLS, SEE P&IDs 0000-PID-0001 THRU 0000-PID-00XX.

B. INSTRUMENT NUMBERS ON THIS P&ID ARE PREFIXED BY THE UNIT NUMBER ASSOCIATED WITH THIS P&ID UNLESS OTHERWISE SPECIFIED.

C. CONTROL VALVES AND BYPASS SIZES ARE PRELIMINARY AND WILL BE CONFIRMED DURING DETAIL DESIGN.

NOTES

1. THREADED BLEED RING ON WATER SERVICE.

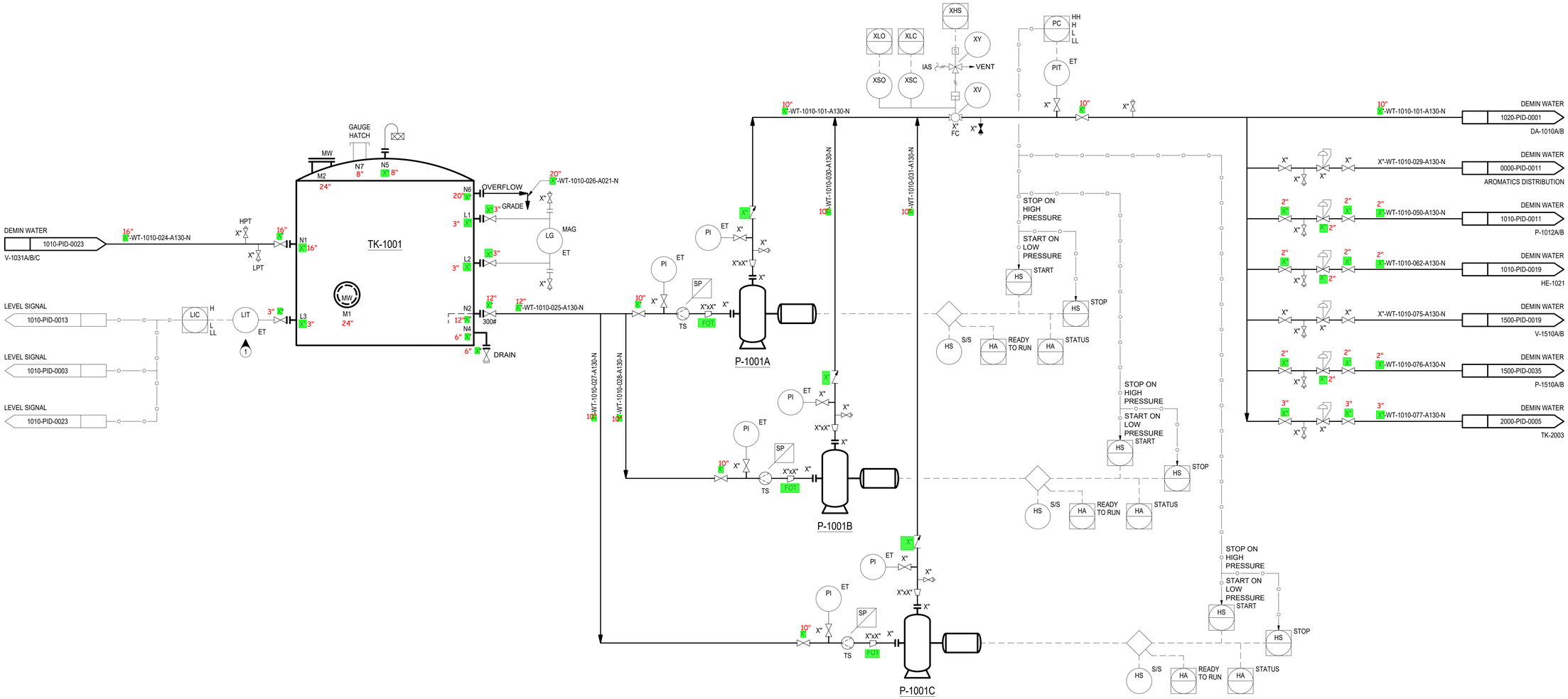

CHECK PRINT

NOT PUBLISHED. ALL RIGHTS RESERVED BY THE ENGINEER. DRAWINGS AND SPECIFICATIONS, AS INSTRUMENTS OF SERVICE, ARE ISSUED TO DESCRIBE DESIGN INTENT. THEY ARE NOT TO BE USED ON OTHER PROJECTS OR EXTENSIONS TO THIS PROJECT, EXCEPT BY AGREEMENT IN WRITING AND WITH APPROPRIATE COMPENSATION TO THE ENGINEER. CONTRACTOR, SUB-CONTRACTORS, & SUPPLIERS ARE RESPONSIBLE FOR CONFIRMING AND CORRELATING DIMENSIONS AND CONDITIONS AT THE JOB SITE, AND SHALL NOTIFY THE ENGINEER IMMEDIATELY OF ANY ERRORS OR DISCREPANCIES IN REGARD TO SUCH. DRAWINGS, DESCRIBING DESIGN INTENT, SHALL NOT INDICATE EVERY DETAIL OR SYSTEM FOR CONSTRUCTION. CONTRACTOR, SUB-CONTRACTORS, AND SUPPLIERS SHALL BE RESPONSIBLE TO PROVIDE ADDITIONAL DRAWINGS AS NECESSARY FOR PERMITS, ERECTION, INSTALLATION, AND CO-ORDINATION OF ALL WORK. CONTRACTOR, SUB-CONTRACTORS, AND SUPPLIERS SHALL BE RESPONSIBLE FOR ALL LABOR AND MATERIALS REQUIRED IN ACCORDANCE WITH DESIGN INTENT. ALL MATERIALS SHALL BE NEW, UNLESS SPECIFIED OTHERWISE, AND SHALL BE INSTALLED LEVEL, PLUMB, STRAIGHT, AND TRUE TO LINE, IN ACCORDANCE WITH THE BEST PRACTICES OF THE TRADES. THE ENGINEER SHALL NOT BE RESPONSIBLE FOR CONSTRUCTION MEANS, METHODS, TECHNIQUES, SEQUENCES OR PROCEDURES, OR FOR SAFETY PRECAUTIONS AND PROGRAMS IN CONNECTION WITH THE WORK. ALL WORK SHALL BE PERFORMED IN ACCORDANCE WITH APPLICABLE CODES AND ORDINANCES.

REFERENCE DRAWINGS:

REV #	DATE	DESCRIPTION	DRWN	CHKD	APVD
A	12-05-25	ISSUED FOR APPROVAL	GS	APB	PDN

REV #	DATE	DESCRIPTION	DRWN	CHKD	APVD

MOTIVA

CLIENT: MOTIVA ENTERPRISES LLC
PLANT: PORT ARTHUR REFINERY
JOB NO:

PIPING & INSTRUMENTATION DIAGRAM
DEMIN WATER TANK

PROJ TITLE: AROMATICS UTILITY SCOPE REVIEW

SSP ENGINEERING & CONSULTING
13100 NORTHWEST FREEWAY
SUITE 625,
HOUSTON, TEXAS 77040

FIRM NUMBER #13619

PROJECT NO: 25MA02	SCALE: NONE
DRAWN BY: GS	CHECKED: APB
DESIGN BY:	ENG APVL: PDN
DRAWING NO: 1010-PID-0033	REV A

DRAWING: 1010-pid-0033.dwg, PLOTTED BY: jason, PLOT DATE: ----, DRAWING LOCATION: c:\users\jason\onedrive - engineer's files - 25ma02 - aromatics utility scope cold eyes review\04 - design\04 - process\pids, (Border Rev1 5.16.25)

GENERAL NOTES

A. FOR PIPING AND INSTRUMENTATION LEGENDS AND SYMBOLS, SEE P&IDs 0000-PID-0001 THRU 0000-PID-00XX.

B. INSTRUMENT NUMBERS ON THIS P&ID ARE PREFIXED BY THE UNIT NUMBER ASSOCIATED WITH THIS P&ID UNLESS OTHERWISE SPECIFIED.

C. CONTROL VALVES AND BYPASS SIZES ARE PRELIMINARY AND WILL BE CONFIRMED DURING DETAIL DESIGN.

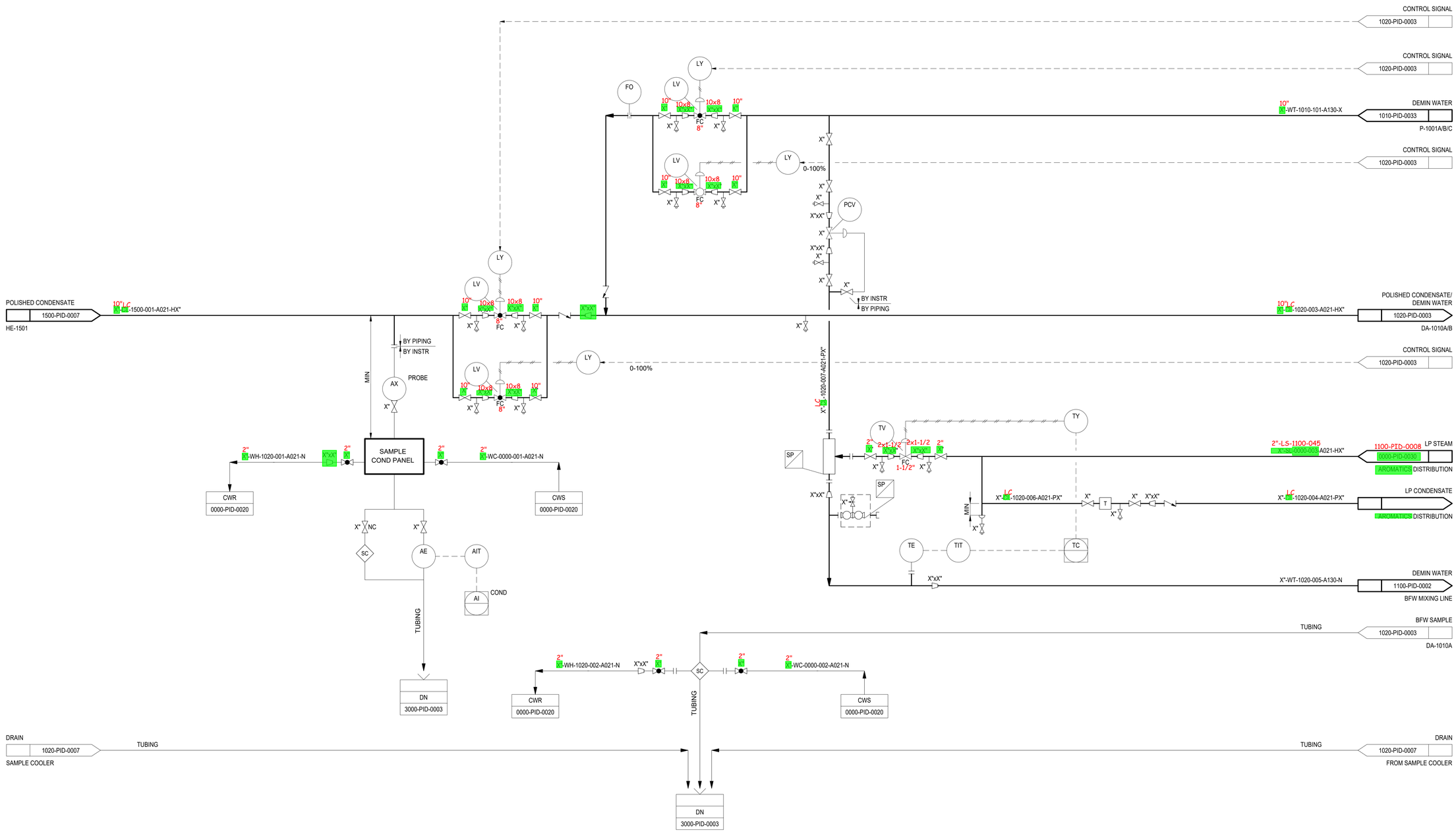

CHECK PRINT

NOT PUBLISHED. ALL RIGHTS RESERVED BY THE ENGINEER. DRAWINGS AND SPECIFICATIONS, AS INSTRUMENTS OF SERVICE, ARE ISSUED TO DESCRIBE DESIGN INTENT. THEY ARE NOT TO BE USED ON OTHER PROJECTS OR EXTENSIONS TO THIS PROJECT, EXCEPT BY AGREEMENT IN WRITING AND WITH APPROPRIATE COMPENSATION TO THE ENGINEER. CONTRACTOR, SUB-CONTRACTORS, & SUPPLIERS ARE RESPONSIBLE FOR CONFIRMING AND CORRELATING DIMENSIONS AND CONDITIONS AT THE JOB SITE, AND SHALL NOTIFY THE ENGINEER IMMEDIATELY OF ANY ERRORS OR DISCREPANCIES IN REGARD TO SUCH. DRAWINGS, DESCRIBING DESIGN INTENT, SHALL NOT INDICATE EVERY DETAIL OR SYSTEM FOR CONSTRUCTION. CONTRACTOR, SUB-CONTRACTORS, AND SUPPLIERS SHALL BE RESPONSIBLE TO PROVIDE ADDITIONAL DRAWINGS AS NECESSARY FOR PERMITS, ERECTION, INSTALLATION, AND CO-ORDINATION OF ALL WORK. CONTRACTOR, SUB-CONTRACTORS, AND SUPPLIERS SHALL BE RESPONSIBLE FOR ALL LABOR AND MATERIALS REQUIRED IN ACCORDANCE WITH DESIGN INTENT. ALL MATERIALS SHALL BE NEW, UNLESS SPECIFIED OTHERWISE, AND SHALL BE INSTALLED LEVEL, PLUMB, STRAIGHT, AND TRUE TO LINE, IN ACCORDANCE WITH THE BEST PRACTICES OF THE TRADES. THE ENGINEER SHALL NOT BE RESPONSIBLE FOR CONSTRUCTION MEANS, METHODS, TECHNIQUES, SEQUENCES OR PROCEDURES, OR FOR SAFETY PRECAUTIONS AND PROGRAMS IN CONNECTION WITH THE WORK. ALL WORK SHALL BE PERFORMED IN ACCORDANCE WITH APPLICABLE CODES AND ORDINANCES.

REFERENCE DRAWINGS:

REV #	DATE	DESCRIPTION	DRWN	CHKD	APVD
A	12-05-25	ISSUED FOR APPROVAL	GS	DLH	PDN

REV #	DATE	DESCRIPTION	DRWN	CHKD	APVD

MOTIVA

CLIENT: MOTIVA ENTERPRISES LLC
PLANT: PORT ARTHUR REFINERY
JOB NO:

PIPING & INSTRUMENTATION DIAGRAM

STEAM UNIT
DEAERATOR SAMPLE SYSTEM

PROJ TITLE: AROMATICS UTILITY SCOPE REVIEW

SSP ENGINEERING & CONSULTING
13100 NORTHWEST FREEWAY
SUITE 625
HOUSTON, TEXAS 77040

FIRM NUMBER #13619

PROJECT NO: 25MA02	SCALE: NONE
DRAWN BY: GS	CHECKED: APB
DESIGN BY:	ENG APVL: PDN
DRAWING NO: 1020-PID-0001	REV A

DRAWING: 1020-pid-0001.dwg PLOTTED BY: jason PLOT DATE: ---- DRAWING LOCATION: c:\users\jason\onedrive - engineering's files - 25ma02 - aromatics utility scope cold eyes review\04 - design\04 - process\pids, (Border Rev1 5.16.25)

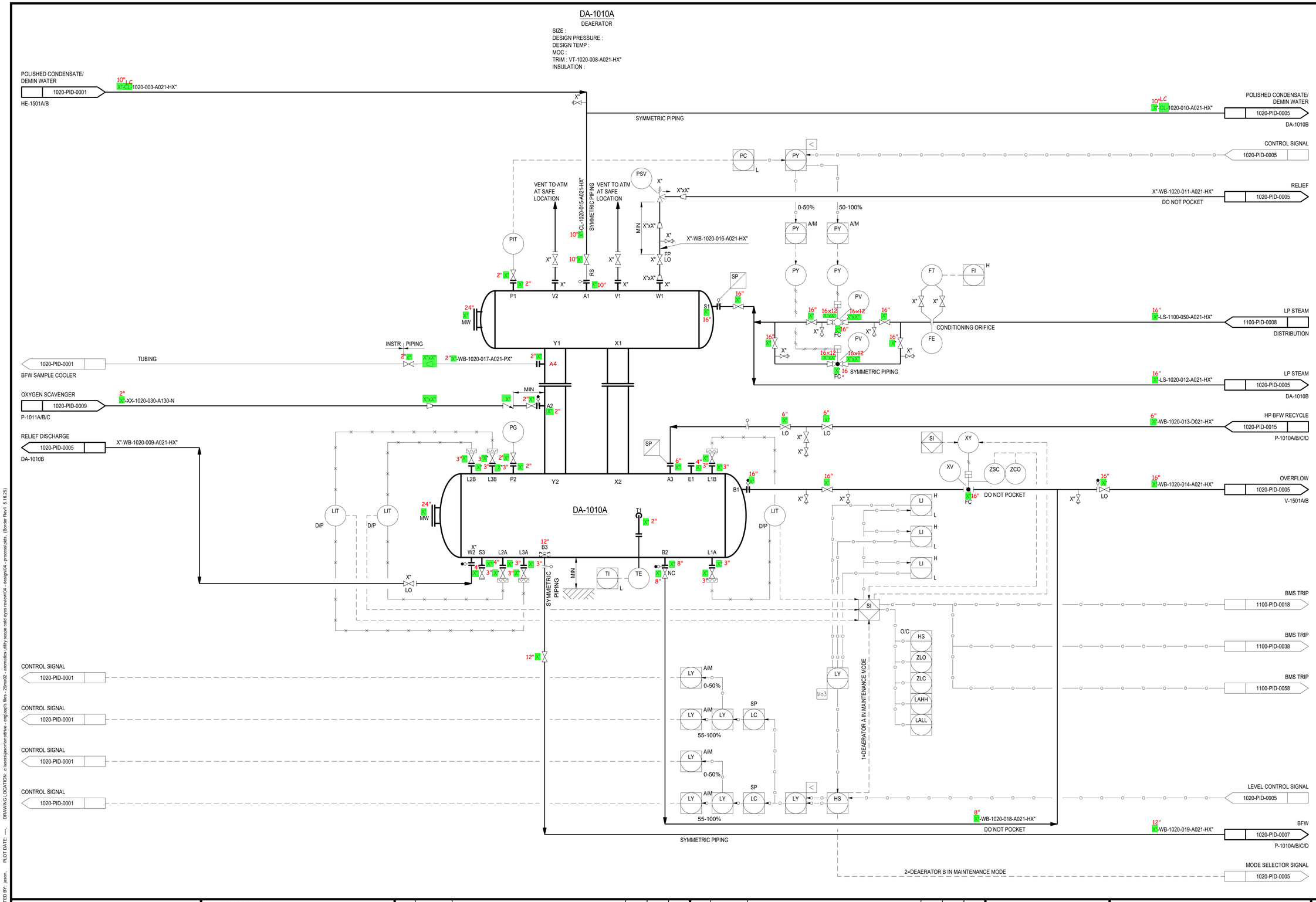

GENERAL NOTES

A. FOR PIPING AND INSTRUMENTATION LEGENDS AND SYMBOLS, SEE P&IDs 0000-PID-0001 THRU 0000-PID-00XX.

B. INSTRUMENT NUMBERS ON THIS P&ID ARE PREFIXED BY THE UNIT NUMBER ASSOCIATED WITH THIS P&ID UNLESS OTHERWISE SPECIFIED.

C. CONTROL VALVES AND BYPASS SIZES ARE PRELIMINARY AND WILL BE CONFIRMED DURING DETAIL DESIGN.

CHECK PRINT

NOT PUBLISHED. ALL RIGHTS RESERVED BY THE ENGINEER. DRAWINGS AND SPECIFICATIONS, AS INSTRUMENTS OF SERVICE, ARE ISSUED TO DESCRIBE DESIGN INTENT. THEY ARE NOT TO BE USED ON OTHER PROJECTS OR EXTENSIONS TO THIS PROJECT, EXCEPT BY AGREEMENT IN WRITING AND WITH APPROPRIATE COMPENSATION TO THE ENGINEER. CONTRACTOR, SUB-CONTRACTORS, & SUPPLIERS ARE RESPONSIBLE FOR CONFIRMING AND CORRELATING DIMENSIONS AND CONDITIONS AT THE JOB SITE, AND SHALL NOTIFY THE ENGINEER IMMEDIATELY OF ANY ERRORS OR DISCREPANCIES IN REGARD TO SUCH DRAWINGS, DESCRIBING DESIGN INTENT. SHALL NOT INDICATE EVERY DETAIL OR SYSTEM FOR CONSTRUCTION. CONTRACTOR, SUB-CONTRACTORS, AND SUPPLIERS SHALL BE RESPONSIBLE TO PROVIDE ADDITIONAL DRAWINGS AS NECESSARY FOR PERMITS, ERECTION, INSTALLATION, AND CO-ORDINATION OF ALL WORK. CONTRACTOR, SUB-CONTRACTORS, AND SUPPLIERS SHALL BE RESPONSIBLE FOR ALL LABOR AND MATERIALS REQUIRED IN ACCORDANCE WITH DESIGN INTENT. ALL MATERIALS SHALL BE NEW, UNLESS SPECIFIED OTHERWISE, AND SHALL BE INSTALLED LEVEL, PLUMB, STRAIGHT, AND TRUE TO LINE, IN ACCORDANCE WITH THE BEST PRACTICES OF THE TRADES. THE ENGINEER SHALL NOT BE RESPONSIBLE FOR CONSTRUCTION MEANS, METHODS, TECHNIQUES, SEQUENCES OR PROCEDURES, OR FOR SAFETY PRECAUTIONS AND PROGRAMS IN CONNECTION WITH THE WORK. ALL WORK SHALL BE PERFORMED IN ACCORDANCE WITH APPLICABLE CODES AND ORDINANCES.

REFERENCE DRAWINGS:

REV #	DATE	DESCRIPTION	DRWN	CHKD	APVD
A	12-05-25	ISSUED FOR APPROVAL	GS	DLH	PDN

REV #	DATE	DESCRIPTION	DRWN	CHKD	APVD

MOTIVA

CLIENT: MOTIVA ENTERPRISES LLC
PLANT: PORT ARTHUR REFINERY
JOB NO:

PIPING & INSTRUMENT DIAGRAM

STEAM UNIT
DEAERATOR A

PROJ TITLE: AROMATICS UTILITY SCOPE REVIEW

SSP ENGINEERING & CONSULTING
13100 NORTHWEST FREEWAY
SUITE 625,
HOUSTON, TEXAS 77040

FIRM NUMBER #13619

PROJECT NO: 25MA02	SCALE: NONE
DRAWN BY: GS	CHECKED: APB
DESIGN BY:	ENG APVL: PDN
DRAWING NO: 1020-PID-0003	REV A

DRAWING: 1020-pid-0003.dwg PLOTTED BY: jason PLOT DATE: ---- DRAWING LOCATION: c:\users\jason\onedrive - engineap's files - 25ma02 - aromatics utility scope cold eyes review\04 - design\04 - process\pids (Border Rev1 5.16.25)

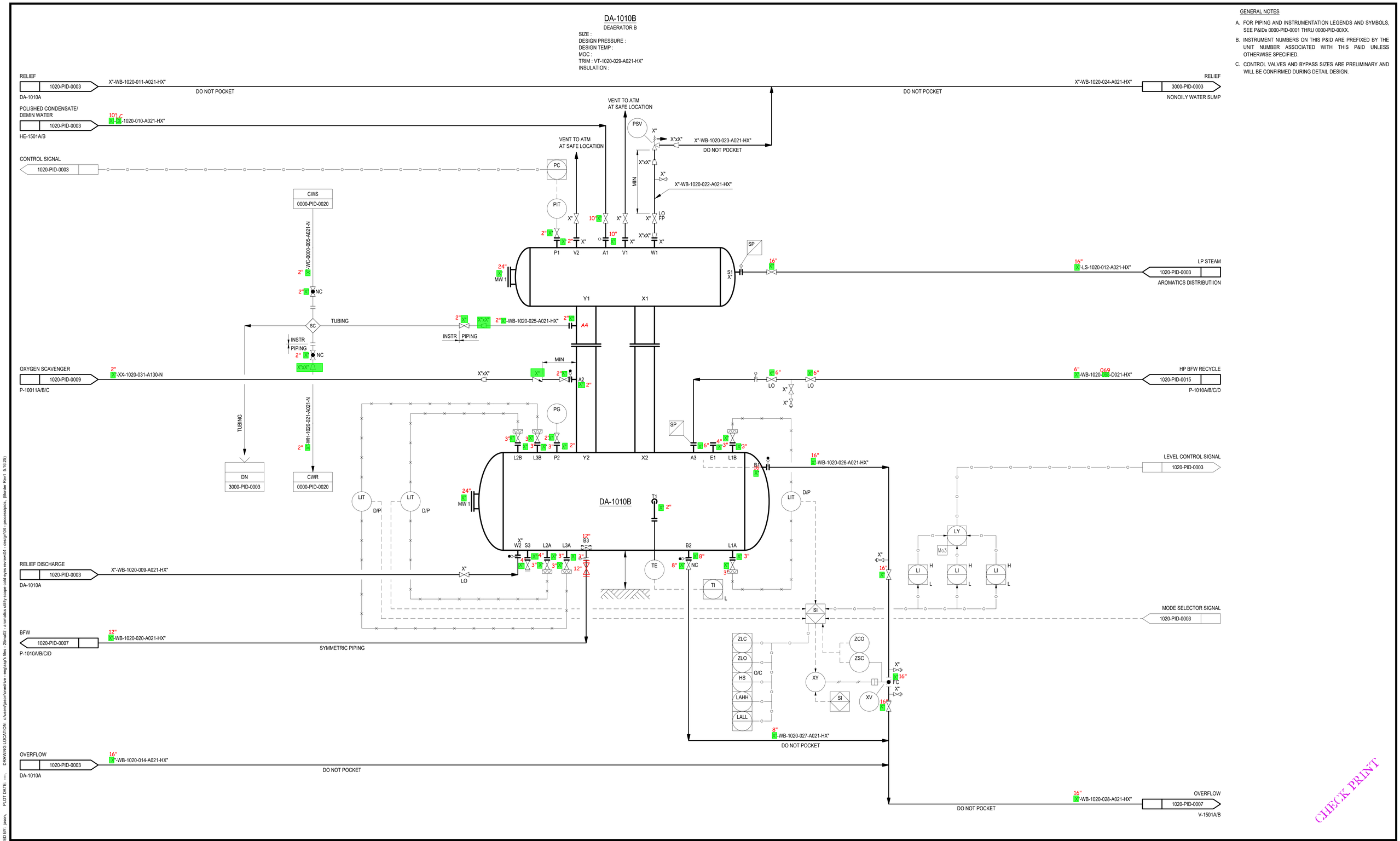

GENERAL NOTES

A. FOR PIPING AND INSTRUMENTATION LEGENDS AND SYMBOLS, SEE P&IDs 0000-PID-0001 THRU 0000-PID-00XX.

B. INSTRUMENT NUMBERS ON THIS P&ID ARE PREFIXED BY THE UNIT NUMBER ASSOCIATED WITH THIS P&ID UNLESS OTHERWISE SPECIFIED.

C. CONTROL VALVES AND BYPASS SIZES ARE PRELIMINARY AND WILL BE CONFIRMED DURING DETAIL DESIGN.

CHECK PRINT

NOT PUBLISHED, ALL RIGHTS RESERVED BY THE ENGINEER. DRAWINGS AND SPECIFICATIONS, AS INSTRUMENTS OF SERVICE, ARE ISSUED TO DESCRIBE DESIGN INTENT. THEY ARE NOT TO BE USED ON OTHER PROJECTS OR EXTENSIONS TO THIS PROJECT, EXCEPT BY AGREEMENT IN WRITING AND WITH APPROPRIATE COMPENSATION TO THE ENGINEER. CONTRACTOR, SUB-CONTRACTORS, & SUPPLIERS ARE RESPONSIBLE FOR CONFIRMING AND CORRELATING DIMENSIONS AND CONDITIONS AT THE JOB SITE, AND SHALL NOTIFY THE ENGINEER IMMEDIATELY OF ANY ERRORS OR DISCREPANCIES IN REGARD TO SUCH. DRAWINGS, DESCRIBING DESIGN INTENT, SHALL NOT INDICATE EVERY DETAIL OR SYSTEM FOR CONSTRUCTION. CONTRACTOR, SUB-CONTRACTORS, AND SUPPLIERS SHALL BE RESPONSIBLE TO PROVIDE ADDITIONAL DRAWINGS AS NECESSARY FOR PERMITS, ERECTION, INSTALLATION, AND CO-ORDINATION OF ALL WORK. CONTRACTOR, SUB-CONTRACTORS, AND SUPPLIERS SHALL BE RESPONSIBLE FOR ALL LABOR AND MATERIALS REQUIRED IN ACCORDANCE WITH DESIGN INTENT. ALL MATERIALS SHALL BE NEW, UNLESS SPECIFIED OTHERWISE, AND SHALL BE INSTALLED LEVEL, PLUMB, STRAIGHT, AND TRUE TO LINE, IN ACCORDANCE WITH THE BEST PRACTICES OF THE TRADES. THE ENGINEER SHALL NOT BE RESPONSIBLE FOR CONSTRUCTION MEANS, METHODS, TECHNIQUES, SEQUENCES OR PROCEDURES, OR FOR SAFETY PRECAUTIONS AND PROGRAMS IN CONNECTION WITH THE WORK. ALL WORK SHALL BE PERFORMED IN ACCORDANCE WITH APPLICABLE CODES AND ORDINANCES.

REFERENCE DRAWINGS:

REV #	DATE	DESCRIPTION	DRWN	CHKD	APVD
A	12-05-25	ISSUED FOR APPROVAL	GS	DLH	PDN

REV #	DATE	DESCRIPTION	DRWN	CHKD	APVD

MOTIVA

CLIENT: MOTIVA ENTERPRISES LLC
PLANT: PORT ARTHUR REFINERY
JOB NO:

PIPING & INSTRUMENT DIAGRAM
STEAM UNIT
DEAERATOR B

PROJ TITLE: AROMATICS UTILITY SCOPE REVIEW

SSP ENGINEERING & CONSULTING
13100 NORTHWEST FREEWAY
SUITE 625,
HOUSTON, TEXAS 77040

FIRM NUMBER #13619

PROJECT NO: 25MA02	SCALE: NONE
DRAWN BY: GS	CHECKED: APB
DESIGN BY:	ENG APVL: PDN
DRAWING NO: 1020-PID-0005	REV A

DRAWING: 1020-pid-00005.dwg PLOTTED BY: jason PLOT DATE: ---- DRAWING LOCATION: c:\users\jason\onedrive - engineer's files - 25ma02 - aromatics utility scope cold eyes review\04 - design\04 - process\pids (Border Rev1 5.16.25)

GENERAL NOTES

A. FOR PIPING AND INSTRUMENTATION LEGENDS AND SYMBOLS, SEE P&IDs 0000-PID-0001 THRU 0000-PID-00XX.

B. INSTRUMENT NUMBERS ON THIS P&ID ARE PREFIXED BY THE UNIT NUMBER ASSOCIATED WITH THIS P&ID UNLESS OTHERWISE SPECIFIED.

C. CONTROL VALVES AND BYPASS SIZES ARE PRELIMINARY AND WILL BE CONFIRMED DURING DETAIL DESIGN.

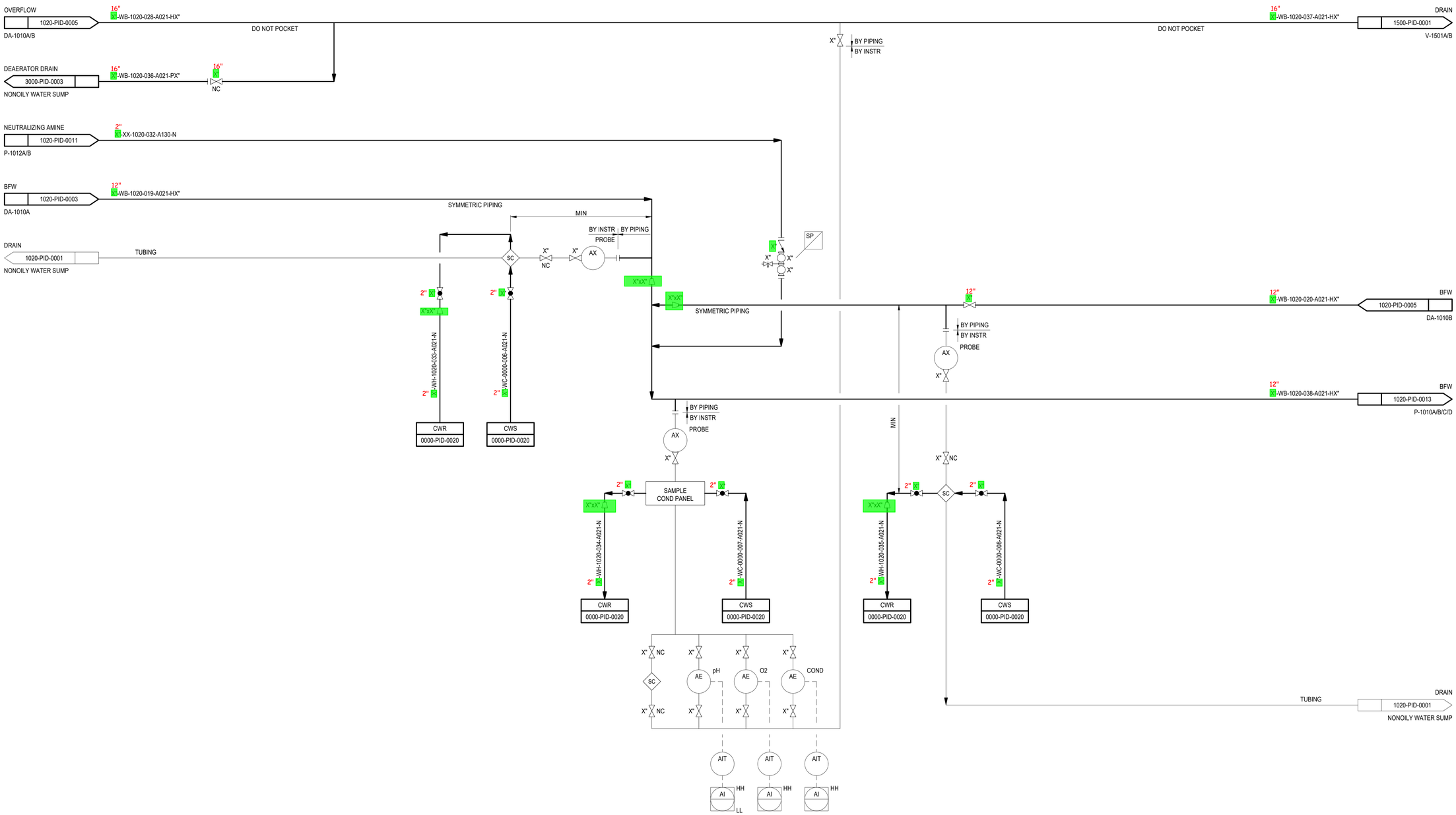

CHECK PRINT

NOT PUBLISHED. ALL RIGHTS RESERVED BY THE ENGINEER. DRAWINGS AND SPECIFICATIONS, AS INSTRUMENTS OF SERVICE, ARE ISSUED TO DESCRIBE DESIGN INTENT. THEY ARE NOT TO BE USED ON OTHER PROJECTS OR EXTENSIONS TO THIS PROJECT, EXCEPT BY AGREEMENT IN WRITING AND WITH APPROPRIATE COMPENSATION TO THE ENGINEER. CONTRACTOR, SUB-CONTRACTORS, & SUPPLIERS ARE RESPONSIBLE FOR CONFIRMING AND CORRELATING DIMENSIONS AND CONDITIONS AT THE JOB SITE, AND SHALL NOTIFY THE ENGINEER IMMEDIATELY OF ANY ERRORS OR DISCREPANCIES IN REGARD TO SUCH. DRAWINGS, DESCRIBING DESIGN INTENT, SHALL NOT INDICATE EVERY DETAIL OR SYSTEM FOR CONSTRUCTION. CONTRACTOR, SUB-CONTRACTORS, AND SUPPLIERS SHALL BE RESPONSIBLE TO PROVIDE ADDITIONAL DRAWINGS AS NECESSARY FOR PERMITS, ERECTION, INSTALLATION, AND CO-ORDINATION OF ALL WORK. CONTRACTOR, SUB-CONTRACTORS, AND SUPPLIERS SHALL BE RESPONSIBLE FOR ALL LABOR AND MATERIALS REQUIRED IN ACCORDANCE WITH DESIGN INTENT. ALL MATERIALS SHALL BE NEW, UNLESS SPECIFIED OTHERWISE, AND SHALL BE INSTALLED LEVEL, PLUMB, STRAIGHT, AND TRUE TO LINE, IN ACCORDANCE WITH THE BEST PRACTICES OF THE TRADES. THE ENGINEER SHALL NOT BE RESPONSIBLE FOR CONSTRUCTION MEANS, METHODS, TECHNIQUES, SEQUENCES OR PROCEDURES, OR FOR SAFETY PRECAUTIONS AND PROGRAMS IN CONNECTION WITH THE WORK. ALL WORK SHALL BE PERFORMED IN ACCORDANCE WITH APPLICABLE CODES AND ORDINANCES.

REFERENCE DRAWINGS:

REV #	DATE	DESCRIPTION	DRWN	CHKD	APVD
A	12-05-25	ISSUED FOR APPROVAL	GS	DLH	PDN

REV #	DATE	DESCRIPTION	DRWN	CHKD	APVD

MOTIVA

CLIENT: MOTIVA ENTERPRISES LLC
PLANT: PORT ARTHUR REFINERY
JOB NO:

PIPING & INSTRUMENTATION DIAGRAM

STEAM UNIT
BFW SAMPLE SYSTEM

PROJ TITLE: AROMATICS UTILITY SCOPE REVIEW

SSP ENGINEERING & CONSULTING
13100 NORTHWEST FREEWAY
SUITE 625,
HOUSTON, TEXAS 77040

FIRM NUMBER #13619

PROJECT NO: 25MA02	SCALE: NONE
DRAWN BY: GS	CHECKED: APB
DESIGN BY:	ENG APVL: PDN
DRAWING NO: 1020-PID-0007	REV A

DRAWING: 1020-pid-0007.dwg PLOTTED BY: jason PLOT DATE: ---- DRAWING LOCATION: c:\users\jason\onedrive - engineyo's files - 25ma02 - aromatics utility scope cold eyes review\04 - design\04 - process\pids (Border Rev1 5.16.25)

TT-1011

OXYGEN SCAVENGER STACKED TOTE
SIZE ID x HEIGHT :
TOTAL VOLUME :
DESIGN PRESSURE :
DESIGN TEMP :
MOC :
TRIM : VT-1020-040-A130-N
INSULATION / TRACING :

P-1011A/B/C

OXYGEN SCAVENGER PUMP
RATED CAPACITY :
DIFFERENTIAL PRESSURE :
RATED POWER :
MOC (CASING / INTERNAL) :
INSULATION / TRACING :
TRIM : VT-1020-041-A130-N
SEAL PLAN :

GENERAL NOTES

A. FOR PIPING AND INSTRUMENTATION LEGENDS AND SYMBOLS, SEE P&IDs 0000-PID-0001 THRU 0000-PID-00XX.

B. INSTRUMENT NUMBERS ON THIS P&ID ARE PREFIXED BY THE UNIT NUMBER ASSOCIATED WITH THIS P&ID UNLESS OTHERWISE SPECIFIED.

C. CONTROL VALVES AND BYPASS SIZES ARE PRELIMINARY AND WILL BE CONFIRMED DURING DETAIL DESIGN.

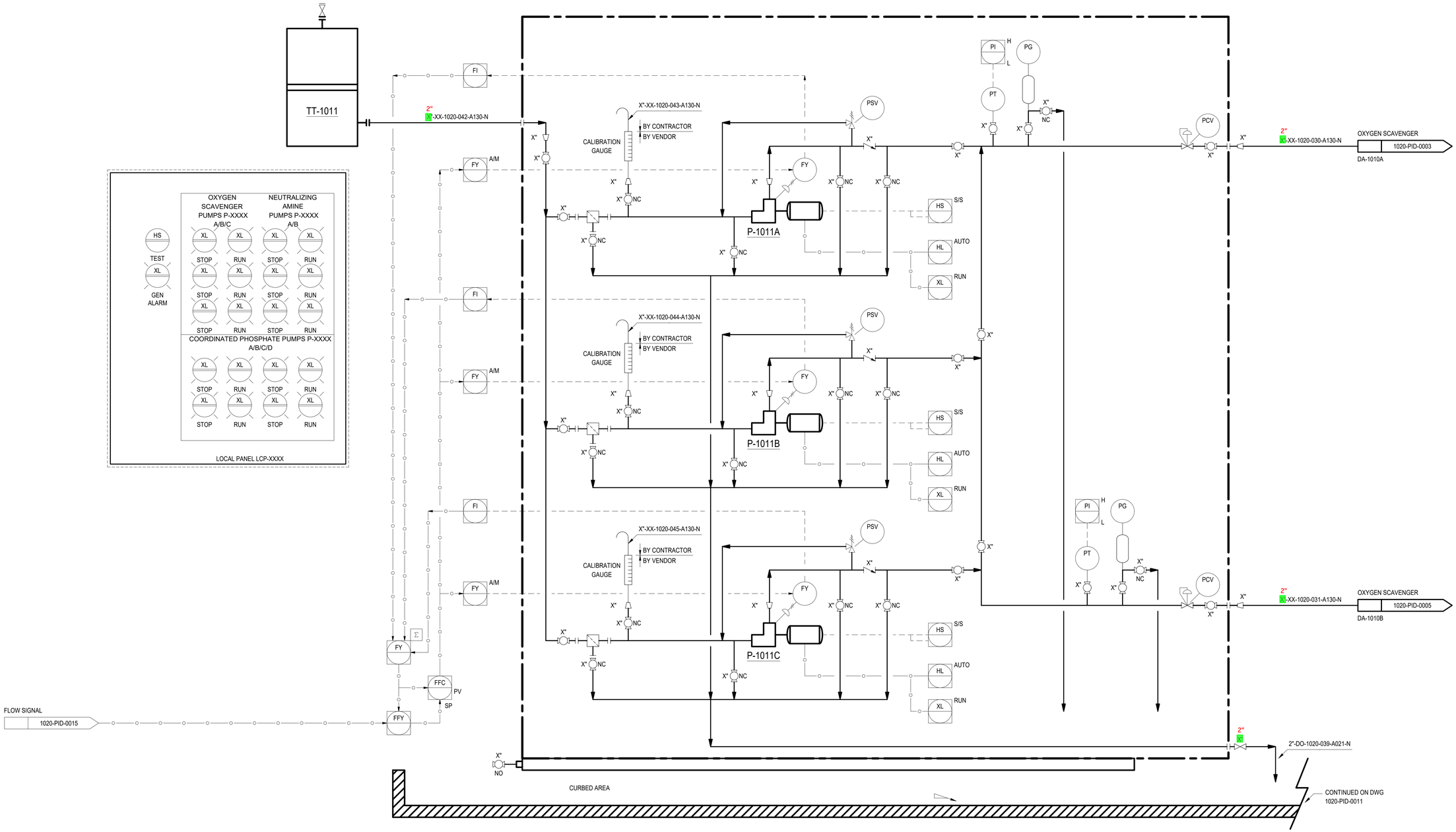

CHECK PRINT

NOT PUBLISHED. ALL RIGHTS RESERVED BY THE ENGINEER. DRAWINGS AND SPECIFICATIONS, AS INSTRUMENTS OF SERVICE, ARE ISSUED TO DESCRIBE DESIGN INTENT. THEY ARE NOT TO BE USED ON OTHER PROJECTS OR EXTENSIONS TO THIS PROJECT, EXCEPT BY AGREEMENT IN WRITING AND WITH APPROPRIATE COMPENSATION TO THE ENGINEER. CONTRACTOR, SUB-CONTRACTORS, & SUPPLIERS ARE RESPONSIBLE FOR CONFIRMING AND CORRELATING DIMENSIONS AND CONDITIONS AT THE JOB SITE, AND SHALL NOTIFY THE ENGINEER IMMEDIATELY OF ANY ERRORS OR DISCREPANCIES IN REGARD TO SUCH. DRAWINGS, DESCRIBING DESIGN INTENT, SHALL NOT INDICATE EVERY DETAIL OR SYSTEM FOR CONSTRUCTION. CONTRACTOR, SUB-CONTRACTORS, AND SUPPLIERS SHALL BE RESPONSIBLE TO PROVIDE ADDITIONAL DRAWINGS AS NECESSARY FOR PERMITS, ERECTION, INSTALLATION, AND CO-ORDINATION OF ALL WORK. CONTRACTOR, SUB-CONTRACTORS, AND SUPPLIERS SHALL BE RESPONSIBLE FOR ALL LABOR AND MATERIALS REQUIRED IN ACCORDANCE WITH DESIGN INTENT. ALL MATERIALS SHALL BE NEW, UNLESS SPECIFIED OTHERWISE, AND SHALL BE INSTALLED LEVEL, PLUMB, STRAIGHT, AND TRUE TO LINE, IN ACCORDANCE WITH THE BEST PRACTICES OF THE TRADES. THE ENGINEER SHALL NOT BE RESPONSIBLE FOR CONSTRUCTION MEANS, METHODS, TECHNIQUES, SEQUENCES OR PROCEDURES, OR FOR SAFETY PRECAUTIONS AND PROGRAMS IN CONNECTION WITH THE WORK. ALL WORK SHALL BE PERFORMED IN ACCORDANCE WITH APPLICABLE CODES AND ORDINANCES.

DRAWING: 1020-pid-0009.dwg PLOTTED BY: jason DRAWING LOCATION: c:\users\jason\onedrive - engineering's files - 25ma02 - aromatics utility scope cold eyes review\04 - design\04 - process\pids (Border Rev1 5.16.25)

REFERENCE DRAWINGS:

REV #	DATE	DESCRIPTION	DRWN	CHKD	APVD
A	12-05-25	ISSUED FOR APPROVAL	GS	DLH	PDN

REV #	DATE	DESCRIPTION	DRWN	CHKD	APVD

MOTIVA

CLIENT: MOTIVA ENTERPRISES LLC
PLANT: PORT ARTHUR REFINERY
JOB NO:

PIPING & INSTRUMENTATION DIAGRAM

OXYGEN SCAVENGER PACKAGE

PROJ TITLE: AROMATICS UTILITY SCOPE REVIEW

SSP ENGINEERING & CONSULTING
13100 NORTHWEST FREEWAY
SUITE 625
HOUSTON, TEXAS 77040

FIRM NUMBER #13619

PROJECT NO: 25MA02	SCALE: NONE
DRAWN BY: GS	CHECKED: APB
DESIGN BY:	ENG APVL: PDN
DRAWING NO: 1020-PID-0009	REV A

TT-1012
NEUTRALIZING AMINE STACKED TOTE
SIZE ID x HEIGHT :
NUMBER OF TRAYS :
RATED CAPACITY :
DESIGN PRESSURE :
DESIGN TEMP :
MOC :
TRIM : VT-1020-050-A130-N
INSULATION :

P-1012A/B
NEUTRALIZING AMINE PUMPS
RATED CAPACITY :
DIFFERENTIAL PRESSURE :
RATED POWER :
MOC (CASING / INTERNAL) :
INSULATION / TRACING :
TRIM : VT-1020-051-A130-N
SEAL PLAN :

GENERAL NOTES

A. FOR PIPING AND INSTRUMENTATION LEGENDS AND SYMBOLS, SEE P&IDs 0000-PID-0001 THRU 0000-PID-00XX.

B. INSTRUMENT NUMBERS ON THIS P&ID ARE PREFIXED BY THE UNIT NUMBER ASSOCIATED WITH THIS P&ID UNLESS OTHERWISE SPECIFIED.

C. CONTROL VALVES AND BYPASS SIZES ARE PRELIMINARY AND WILL BE CONFIRMED DURING DETAIL DESIGN.

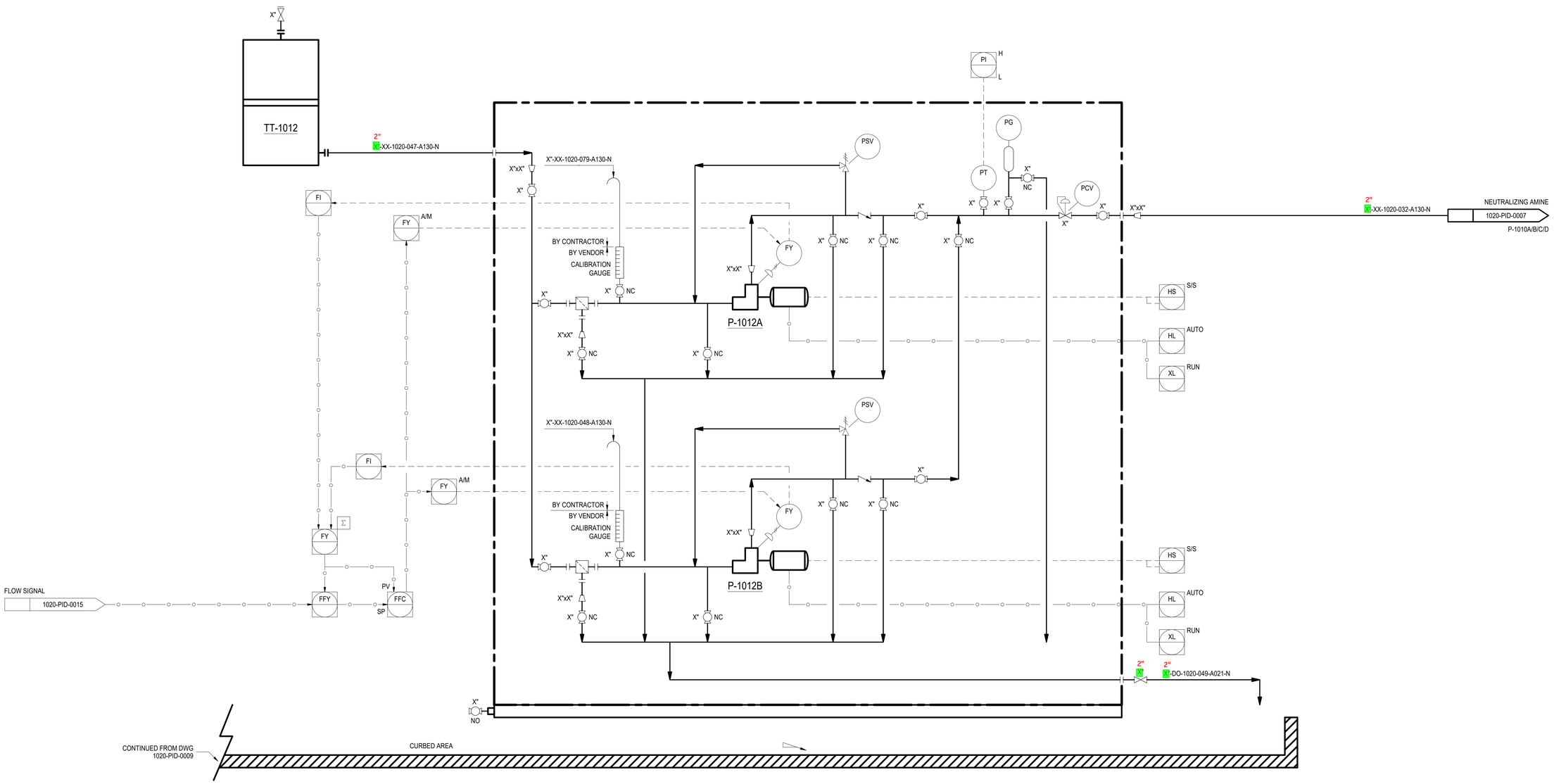

CHECK PRINT

NOT PUBLISHED, ALL RIGHTS RESERVED BY THE ENGINEER. DRAWINGS AND SPECIFICATIONS, AS INSTRUMENTS OF SERVICE, ARE ISSUED TO DESCRIBE DESIGN INTENT. THEY ARE NOT TO BE USED ON OTHER PROJECTS OR EXTENSIONS TO THIS PROJECT, EXCEPT BY AGREEMENT IN WRITING AND WITH APPROPRIATE COMPENSATION TO THE ENGINEER. CONTRACTOR, SUB-CONTRACTORS, & SUPPLIERS ARE RESPONSIBLE FOR CONFIRMING AND CORRELATING DIMENSIONS AND CONDITIONS AT THE JOB SITE, AND SHALL NOTIFY THE ENGINEER IMMEDIATELY OF ANY ERRORS OR DISCREPANCIES IN REGARD TO SUCH DRAWINGS, DESCRIBING DESIGN INTENT. SHALL NOT INDICATE EVERY DETAIL OR SYSTEM FOR CONSTRUCTION. CONTRACTOR, SUB-CONTRACTORS, AND SUPPLIERS SHALL BE RESPONSIBLE TO PROVIDE ADDITIONAL DRAWINGS AS NECESSARY FOR PERMITS, ERECTION, INSTALLATION, AND CO-ORDINATION OF ALL WORK. CONTRACTOR, SUB-CONTRACTORS, AND SUPPLIERS SHALL BE RESPONSIBLE FOR ALL LABOR AND MATERIALS REQUIRED IN ACCORDANCE WITH DESIGN INTENT. ALL MATERIALS SHALL BE NEW, UNLESS SPECIFIED OTHERWISE, AND SHALL BE INSTALLED LEVEL, PLUMB, STRAIGHT, AND TRUE TO LINE, IN ACCORDANCE WITH THE BEST PRACTICES OF THE TRADES. THE ENGINEER SHALL NOT BE RESPONSIBLE FOR CONSTRUCTION MEANS, METHODS, TECHNIQUES, SEQUENCES OR PROCEDURES, OR FOR SAFETY PRECAUTIONS AND PROGRAMS IN CONNECTION WITH THE WORK. ALL WORK SHALL BE PERFORMED IN ACCORDANCE WITH APPLICABLE CODES AND ORDINANCES.

REFERENCE DRAWINGS:

REV #	DATE	DESCRIPTION	DRWN	CHKD	APVD
A	12-05-25	ISSUED FOR APPROVAL	GS	DLH	PDN

REV #	DATE	DESCRIPTION	DRWN	CHKD	APVD

MOTIVA

CLIENT: MOTIVA ENTERPRISES LLC
PLANT: PORT ARTHUR REFINERY
JOB NO:

PIPING & INSTRUMENTATION DIAGRAM
NEUTRALIZING AMINE PACKAGE

PROJ TITLE: AROMATICS UTILITY SCOPE REVIEW

SSP ENGINEERING & CONSULTING
13100 NORTHWEST FREEWAY
SUITE 625,
HOUSTON, TEXAS 77040

FIRM NUMBER #13619

PROJECT NO: 25MA02	SCALE: NONE
DRAWN BY: GS	CHECKED: APB
DESIGN BY:	ENG APVL: PDN
DRAWING NO: 1020-PID-0011	REV A

DRAWING: 1020-pid-0011.dwg PLOTTED BY: jason. PLOT DATE: ---- DRAWING LOCATION: c:\users\jasonionedrive - eng\ssp's files - 25ma02 - aromatics utility scope cold eyes review\04 - design\04 - process\pids. (Border Rev1 5.16.25)

P-1010A/B

BFW PUMPS

RATED CAPACITY :
DIFFERENTIAL PRESSURE :
RATED POWER :
MOC (CASING / INTERNAL) :
INSULATION / TRACING :
TRIM : VT-1020-062-D021-HX
SEAL PLAN :

GENERAL NOTES

A. FOR PIPING AND INSTRUMENTATION LEGENDS AND SYMBOLS, SEE P&IDs 0000-PID-0001 THRU 0000-PID-00XX.

B. INSTRUMENT NUMBERS ON THIS P&ID ARE PREFIXED BY THE UNIT NUMBER ASSOCIATED WITH THIS P&ID UNLESS OTHERWISE SPECIFIED.

C. CONTROL VALVES AND BYPASS SIZES ARE PRELIMINARY AND WILL BE CONFIRMED DURING DETAIL DESIGN.

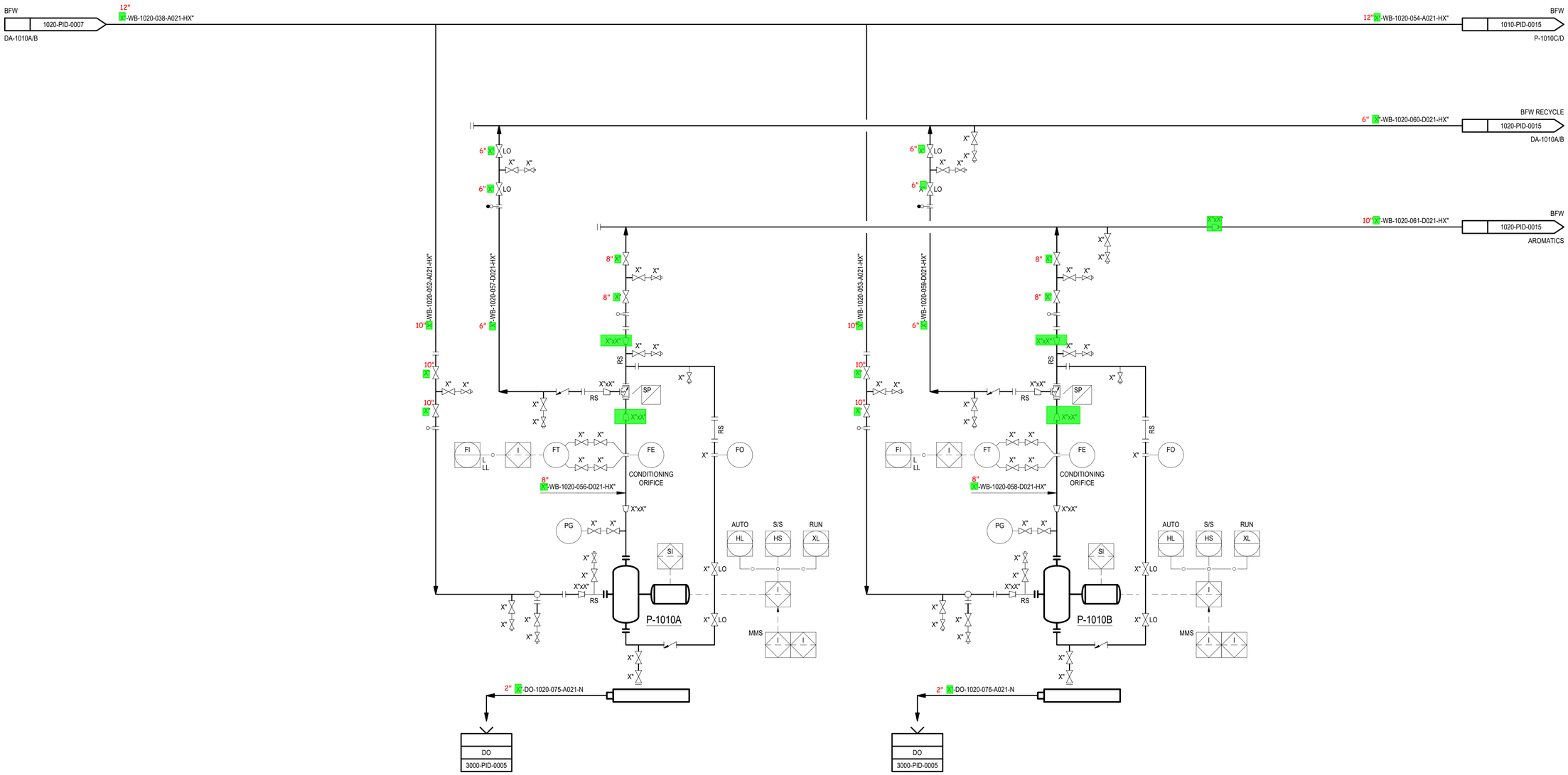

CHECK PRINT

NOT PUBLISHED. ALL RIGHTS RESERVED BY THE ENGINEER. DRAWINGS AND SPECIFICATIONS, AS INSTRUMENTS OF SERVICE, ARE ISSUED TO DESCRIBE DESIGN INTENT. THEY ARE NOT TO BE USED ON OTHER PROJECTS OR EXTENSIONS TO THIS PROJECT, EXCEPT BY AGREEMENT IN WRITING AND WITH APPROPRIATE COMPENSATION TO THE ENGINEER. CONTRACTOR, SUB-CONTRACTORS, & SUPPLIERS ARE RESPONSIBLE FOR CONFIRMING AND CORRELATING DIMENSIONS AND CONDITIONS AT THE JOB SITE, AND SHALL NOTIFY THE ENGINEER IMMEDIATELY OF ANY ERRORS OR DISCREPANCIES IN REGARD TO SUCH. DRAWINGS, DESCRIBING DESIGN INTENT, SHALL NOT INDICATE EVERY DETAIL OR SYSTEM FOR CONSTRUCTION. CONTRACTOR, SUB-CONTRACTORS, AND SUPPLIERS SHALL BE RESPONSIBLE TO PROVIDE ADDITIONAL DRAWINGS AS NECESSARY FOR PERMITS, ERECTION, INSTALLATION, AND CO-ORDINATION OF ALL WORK. CONTRACTOR, SUB-CONTRACTORS, AND SUPPLIERS SHALL BE RESPONSIBLE FOR ALL LABOR AND MATERIALS REQUIRED IN ACCORDANCE WITH DESIGN INTENT. ALL MATERIALS SHALL BE NEW, UNLESS SPECIFIED OTHERWISE, AND SHALL BE INSTALLED LEVEL, PLUMB, STRAIGHT, AND TRUE TO LINE, IN ACCORDANCE WITH THE BEST PRACTICES OF THE TRADES. THE ENGINEER SHALL NOT BE RESPONSIBLE FOR CONSTRUCTION MEANS, METHODS, TECHNIQUES, SEQUENCES OR PROCEDURES, OR FOR SAFETY PRECAUTIONS AND PROGRAMS IN CONNECTION WITH THE WORK. ALL WORK SHALL BE PERFORMED IN ACCORDANCE WITH APPLICABLE CODES AND ORDINANCES.

DRAWING: 1020-pid-0013.dwg, PLOTTED BY: jason, PLOT DATE: ----, DRAWING LOCATION: c:\users\jason\onedrive - engineer's files - 25ma02 - aromatics utility scope cold eyes review\04 - design\04 - process\pids, (Border Rev1 5.16.25)

REFERENCE DRAWINGS:

REV #	DATE	DESCRIPTION	DRWN	CHKD	APVD
A	12-05-25	ISSUED FOR APPROVAL	GS	DLH	PDN

REV #	DATE	DESCRIPTION	DRWN	CHKD	APVD

MOTIVA

CLIENT: MOTIVA ENTERPRISES LLC
PLANT: PORT ARTHUR REFINERY
JOB NO:

PIPING & INSTRUMENTATION DIAGRAM

STEAM UNIT
BFW PUMPS A/B

PROJ TITLE: AROMATICS UTILITY SCOPE REVIEW

SSP ENGINEERING & CONSULTING
13100 NORTHWEST FREEWAY
SUITE 625,
HOUSTON, TEXAS 77040

FIRM NUMBER #13619

PROJECT NO: 25MA02	SCALE: NONE
DRAWN BY: GS	CHECKED: APB
DESIGN BY:	ENG APVL: PDN
DRAWING NO: 1020-PID-0013	REV A

P-1010C/D

BFW PUMPS

RATED CAPACITY :
DIFFERENTIAL PRESSURE :
RATED POWER :
MOC (CASING / INTERNAL) :
INSULATION / TRACING :
TRIM : VT-1020-074-D021-HX"
SEAL PLAN :

GENERAL NOTES

A. FOR PIPING AND INSTRUMENTATION LEGENDS AND SYMBOLS, SEE P&IDs 0000-PID-0001 THRU 0000-PID-00XX.

B. INSTRUMENT NUMBERS ON THIS P&ID ARE PREFIXED BY THE UNIT NUMBER ASSOCIATED WITH THIS P&ID UNLESS OTHERWISE SPECIFIED.

C. CONTROL VALVES AND BYPASS SIZES ARE PRELIMINARY AND WILL BE CONFIRMED DURING DETAIL DESIGN.

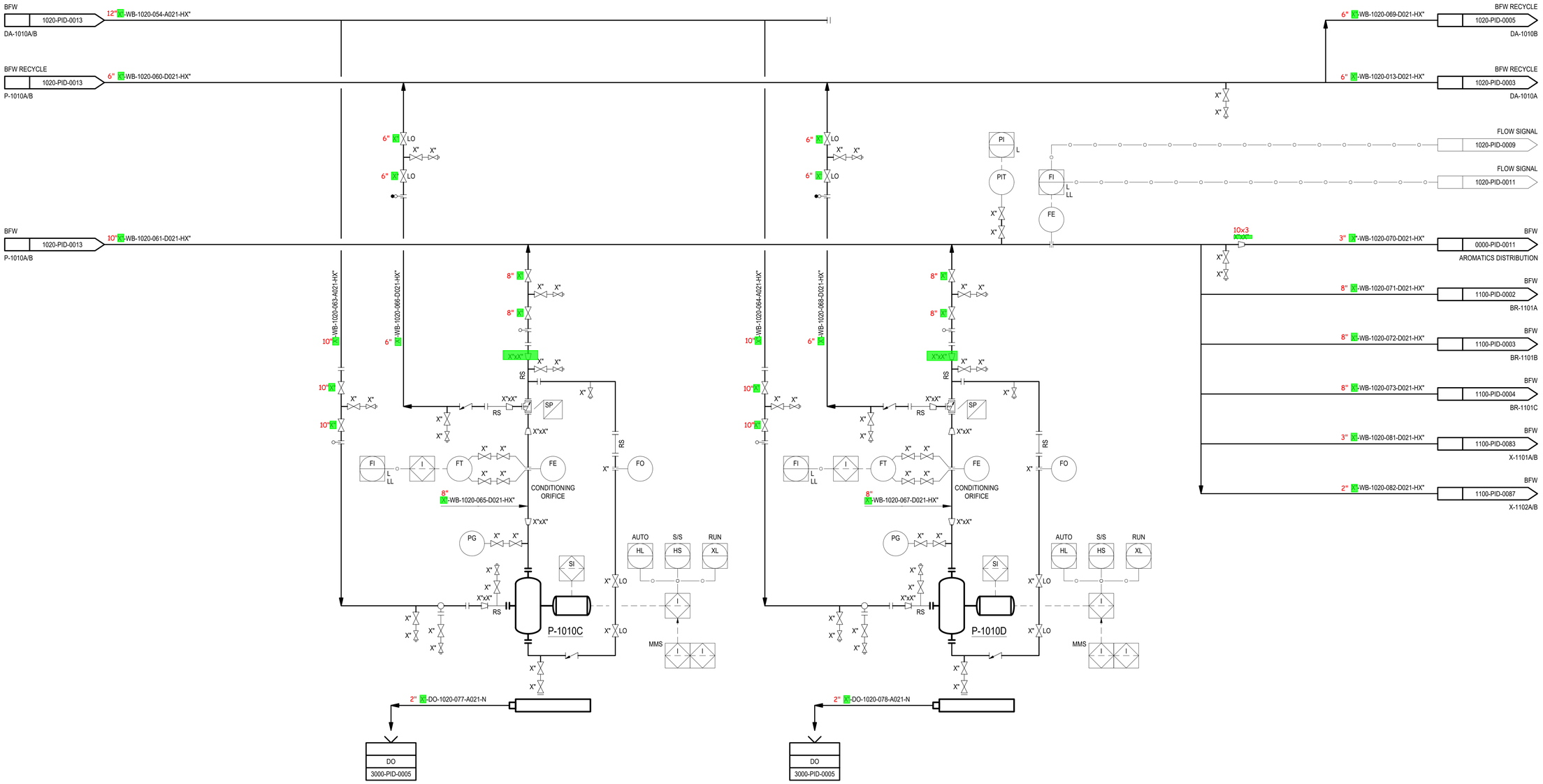

CHECK PRINT

NOT PUBLISHED, ALL RIGHTS RESERVED BY THE ENGINEER. DRAWINGS AND SPECIFICATIONS, AS INSTRUMENTS OF SERVICE, ARE ISSUED TO DESCRIBE DESIGN INTENT. THEY ARE NOT TO BE USED ON OTHER PROJECTS OR EXTENSIONS TO THIS PROJECT, EXCEPT BY AGREEMENT IN WRITING AND WITH APPROPRIATE COMPENSATION TO THE ENGINEER. CONTRACTOR, SUB-CONTRACTORS, & SUPPLIERS ARE RESPONSIBLE FOR CONFIRMING AND CORRELATING DIMENSIONS AND CONDITIONS AT THE JOB SITE, AND SHALL NOTIFY THE ENGINEER IMMEDIATELY OF ANY ERRORS OR DISCREPANCIES IN REGARD TO SUCH DRAWINGS, DESCRIBING DESIGN INTENT. SHALL NOT INDICATE EVERY DETAIL OR SYSTEM FOR CONSTRUCTION. CONTRACTOR, SUB-CONTRACTORS, AND SUPPLIERS SHALL BE RESPONSIBLE TO PROVIDE ADDITIONAL DRAWINGS AS NECESSARY FOR PERMITS, ERECTION, INSTALLATION, AND CO-ORDINATION OF ALL WORK. CONTRACTOR, SUB-CONTRACTORS, AND SUPPLIERS SHALL BE RESPONSIBLE FOR ALL LABOR AND MATERIALS REQUIRED IN ACCORDANCE WITH DESIGN INTENT. ALL MATERIALS SHALL BE NEW. UNLESS SPECIFIED OTHERWISE, AND SHALL BE INSTALLED LEVEL, PLUMB, STRAIGHT, AND TRUE TO LINE, IN ACCORDANCE WITH THE BEST PRACTICES OF THE TRADES. THE ENGINEER SHALL NOT BE RESPONSIBLE FOR CONSTRUCTION MEANS, METHODS, TECHNIQUES, SEQUENCES OR PROCEDURES, OR FOR SAFETY PRECAUTIONS AND PROGRAMS IN CONNECTION WITH THE WORK. ALL WORK SHALL BE PERFORMED IN ACCORDANCE WITH APPLICABLE CODES AND ORDINANCES.

REFERENCE DRAWINGS:

REV #	DATE	DESCRIPTION	DRWN	CHKD	APVD
A	12-05-25	ISSUED FOR APPROVAL	GS	DLH	PDN

REV #	DATE	DESCRIPTION	DRWN	CHKD	APVD

MOTIVA

CLIENT: MOTIVA ENTERPRISES LLC
PLANT: PORT ARTHUR REFINERY
JOB NO:

PIPING & INSTRUMENTATION DIAGRAM

STEAM UNIT
BFW PUMPS C/D

PROJ TITLE: AROMATICS UTILITY SCOPE REVIEW

SSP ENGINEERING & CONSULTING
13100 NORTHWEST FREEWAY
SUITE 625,
HOUSTON, TEXAS 77040

FIRM NUMBER #13619

PROJECT NO: 25MA02	SCALE: NONE
DRAWN BY: GS	CHECKED: APB
DESIGN BY:	ENG APVL: PDN
DRAWING NO: 1020-PID-0015	REV A

DRAWING: 1020-pid-0015.dwg, PLOTTED BY: jason, PLOT DATE: ----, DRAWING LOCATION: c:\users\jason\onedrive - eng\ssp's files - 25ma02 - aromatics utility scope cold eyes review\04 - design\04 - process\pids, (Border Rev1 5.16.25)

V-1105

FUEL GAS COALESCER
SIZE ID x T / T :
DESIGN PRESSURE :
DESIGN TEMP :
MOC :
TRIM : VT-1100-013-A130-N
INSULATION :

GENERAL NOTES

A. FOR PIPING AND INSTRUMENTATION LEGENDS AND SYMBOLS, SEE P&IDs 0000-PID-0001 THRU 0000-PID-00XX.

B. INSTRUMENT NUMBERS ON THIS P&ID ARE PREFIXED BY THE UNIT NUMBER ASSOCIATED WITH THIS P&ID UNLESS OTHERWISE SPECIFIED.

C. CONTROL VALVES AND BYPASS SIZES ARE PRELIMINARY AND WILL BE CONFIRMED DURING DETAIL DESIGN.

NOTES

1. COALESCER PSV WILL BE ROUTED TO AROMATICS FLARE DEPENDING ON AVAILABILITY OF TIE-IN POINT.

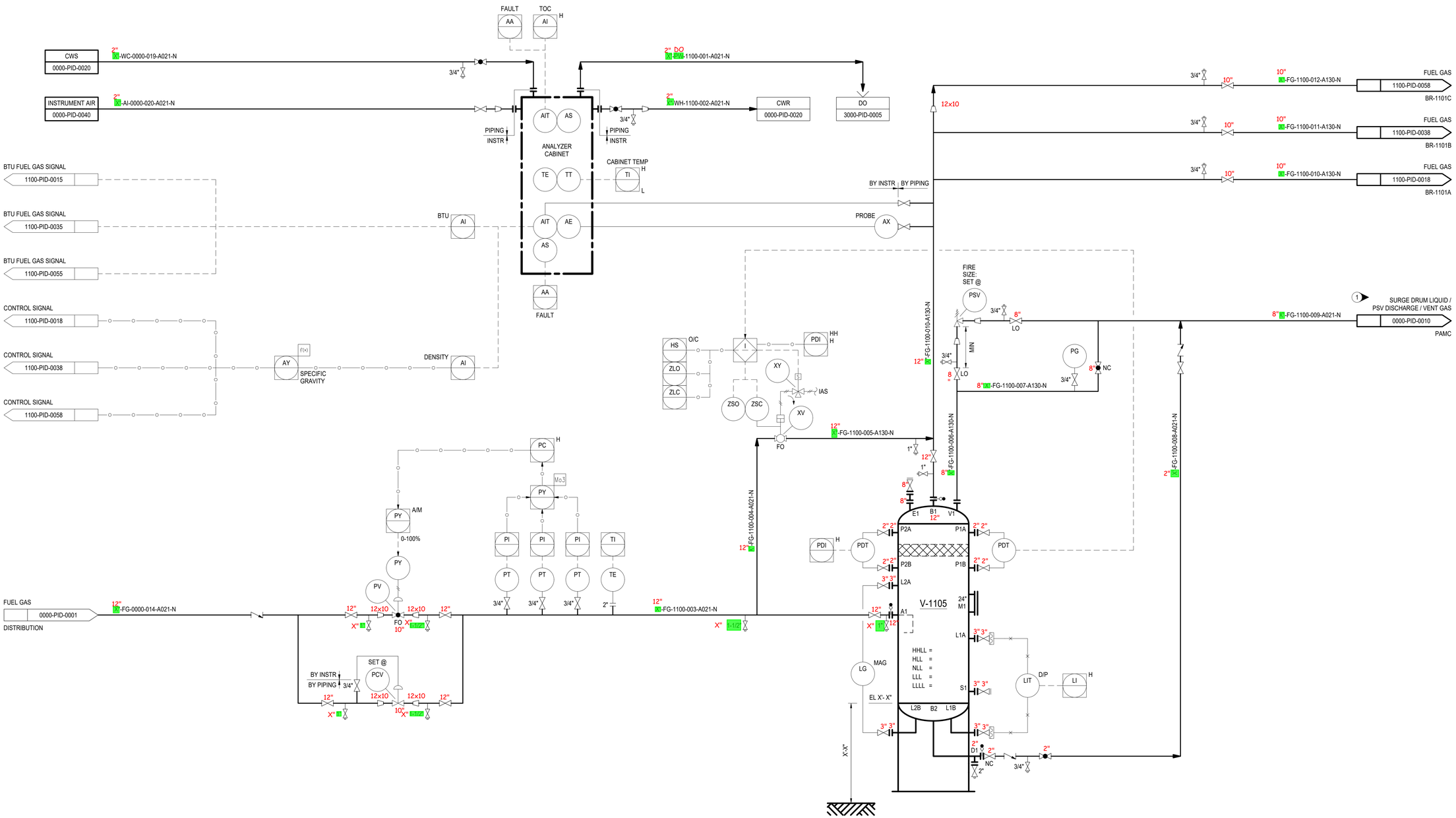

CHECK PRINT

NOT PUBLISHED. ALL RIGHTS RESERVED BY THE ENGINEER. DRAWINGS AND SPECIFICATIONS, AS INSTRUMENTS OF SERVICE, ARE ISSUED TO DESCRIBE DESIGN INTENT. THEY ARE NOT TO BE USED ON OTHER PROJECTS OR EXTENSIONS TO THIS PROJECT, EXCEPT BY AGREEMENT IN WRITING AND WITH APPROPRIATE COMPENSATION TO THE ENGINEER. CONTRACTOR, SUB-CONTRACTORS, & SUPPLIERS ARE RESPONSIBLE FOR CONFIRMING AND CORRELATING DIMENSIONS AND CONDITIONS AT THE JOB SITE, AND SHALL NOTIFY THE ENGINEER IMMEDIATELY OF ANY ERRORS OR DISCREPANCIES IN REGARD TO SUCH DRAWINGS, DESCRIBING DESIGN INTENT, SHALL NOT INDICATE EVERY DETAIL OR SYSTEM FOR CONSTRUCTION. CONTRACTOR, SUB-CONTRACTORS, AND SUPPLIERS SHALL BE RESPONSIBLE TO PROVIDE ADDITIONAL DRAWINGS AS NECESSARY FOR PERMITS, ERECTION, INSTALLATION, AND CO-ORDINATION OF ALL WORK. CONTRACTOR, SUB-CONTRACTORS, AND SUPPLIERS SHALL BE RESPONSIBLE FOR ALL LABOR AND MATERIALS REQUIRED IN ACCORDANCE WITH DESIGN INTENT. ALL MATERIALS SHALL BE NEW, UNLESS SPECIFIED OTHERWISE, AND SHALL BE INSTALLED LEVEL, PLUMB, STRAIGHT, AND TRUE TO LINE, IN ACCORDANCE WITH THE BEST PRACTICES OF THE TRADES. THE ENGINEER SHALL NOT BE RESPONSIBLE FOR CONSTRUCTION MEANS, METHODS, TECHNIQUES, SEQUENCES OR PROCEDURES, OR FOR SAFETY PRECAUTIONS AND PROGRAMS IN CONNECTION WITH THE WORK. ALL WORK SHALL BE PERFORMED IN ACCORDANCE WITH APPLICABLE CODES AND ORDINANCES.

REFERENCE DRAWINGS:

REV #	DATE	DESCRIPTION	DRWN	CHKD	APVD
A	12-05-25	ISSUED FOR APPROVAL	GS	APB	PDN

REV #	DATE	DESCRIPTION	DRWN	CHKD	APVD

MOTIVA

CLIENT: MOTIVA ENTERPRISES LLC
PLANT: PORT ARTHUR REFINERY
JOB NO:

PIPING & INSTRUMENTATION DIAGRAM
STEAM UNIT
FUEL GAS COALESCER

PROJ TITLE: AROMATICS UTILITY SCOPE REVIEW

SSP ENGINEERING & CONSULTING
13100 NORTHWEST FREEWAY
SUITE 625,
HOUSTON, TEXAS 77040

FIRM NUMBER #13619

PROJECT NO: 25MA02	SCALE: NONE
DRAWN BY: GS	CHECKED: APB
DESIGN BY:	ENG APVL: PDN
DRAWING NO: 1100-PID-0001	REV A

DRAWING: 1100-pid-0001.dwg, PLOTTED BY: jason, PLOT DATE: ----, DRAWING LOCATION: c:\users\jason\onedrive - engineg's files - 25ma02 - aromatics utility scope cold eyes review\04 - design\04 - process\pids, (Border Rev1 5.16.25)

GENERAL NOTES

A. FOR PIPING AND INSTRUMENTATION LEGENDS AND SYMBOLS, SEE P&IDs 0000-PID-0001 THRU 0000-PID-00XX.

B. INSTRUMENT NUMBERS ON THIS P&ID ARE PREFIXED BY THE UNIT NUMBER ASSOCIATED WITH THIS P&ID UNLESS OTHERWISE SPECIFIED.

C. CONTROL VALVES AND BYPASS SIZES ARE PRELIMINARY AND WILL BE CONFIRMED DURING DETAIL DESIGN.

NOTES

1. VALVE FOR STEAM BLOWS OF HP SYSTEM.

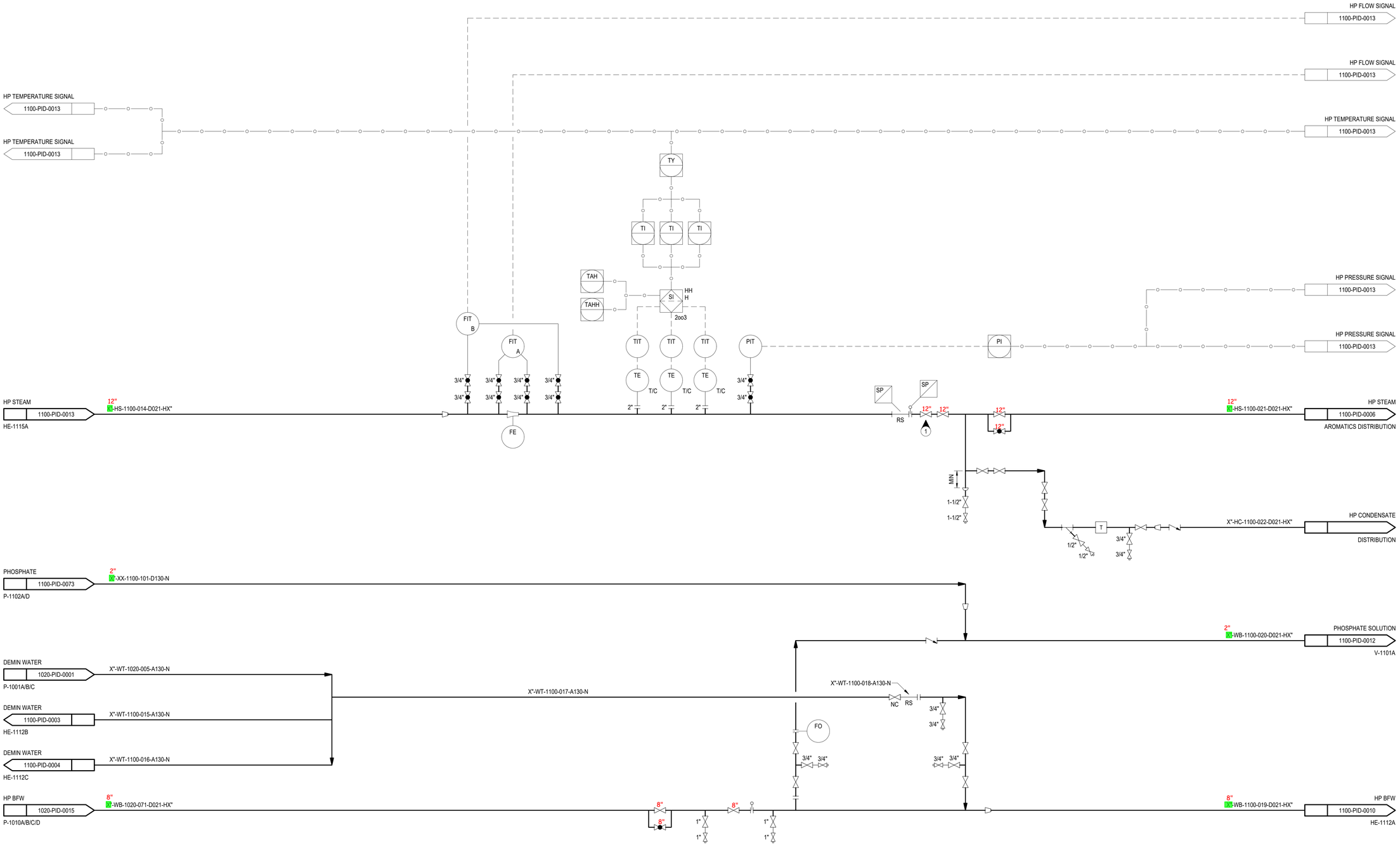

CHECK PRINT

NOT PUBLISHED. ALL RIGHTS RESERVED BY THE ENGINEER. DRAWINGS AND SPECIFICATIONS, AS INSTRUMENTS OF SERVICE, ARE ISSUED TO DESCRIBE DESIGN INTENT. THEY ARE NOT TO BE USED ON OTHER PROJECTS OR EXTENSIONS TO THIS PROJECT, EXCEPT BY AGREEMENT IN WRITING AND WITH APPROPRIATE COMPENSATION TO THE ENGINEER. CONTRACTOR, SUB-CONTRACTORS, & SUPPLIERS ARE RESPONSIBLE FOR CONFIRMING AND CORRELATING DIMENSIONS AND CONDITIONS AT THE JOB SITE, AND SHALL NOTIFY THE ENGINEER IMMEDIATELY OF ANY ERRORS OR DISCREPANCIES IN REGARD TO SUCH DRAWINGS, DESCRIBING DESIGN INTENT, SHALL NOT INDICATE EVERY DETAIL OR SYSTEM FOR CONSTRUCTION. CONTRACTOR, SUB-CONTRACTORS, AND SUPPLIERS SHALL BE RESPONSIBLE TO PROVIDE ADDITIONAL DRAWINGS AS NECESSARY FOR PERMITS, ERECTION, INSTALLATION, AND CO-ORDINATION OF ALL WORK. CONTRACTOR, SUB-CONTRACTORS, AND SUPPLIERS SHALL BE RESPONSIBLE FOR ALL LABOR AND MATERIALS REQUIRED IN ACCORDANCE WITH DESIGN INTENT. ALL MATERIALS SHALL BE NEW, UNLESS SPECIFIED OTHERWISE, AND SHALL BE INSTALLED LEVEL, PLUMB, STRAIGHT, AND TRUE TO LINE, IN ACCORDANCE WITH THE BEST PRACTICES OF THE TRADES. THE ENGINEER SHALL NOT BE RESPONSIBLE FOR CONSTRUCTION MEANS, METHODS, TECHNIQUES, SEQUENCES OR PROCEDURES, OR FOR SAFETY PRECAUTIONS AND PROGRAMS IN CONNECTION WITH THE WORK. ALL WORK SHALL BE PERFORMED IN ACCORDANCE WITH APPLICABLE CODES AND ORDINANCES.

REFERENCE DRAWINGS:

REV #	DATE	DESCRIPTION	DRWN	CHKD	APVD
A	12-05-25	ISSUED FOR APPROVAL	GS	APB	PDN

REV #	DATE	DESCRIPTION	DRWN	CHKD	APVD

MOTIVA

CLIENT: MOTIVA ENTERPRISES LLC
PLANT: PORT ARTHUR REFINERY
JOB NO:

PIPING & INSTRUMENTATION DIAGRAM
STEAM UNIT
BFW AND HP STEAM BOILER A

PROJ TITLE: AROMATICS UTILITY SCOPE REVIEW

SSP ENGINEERING & CONSULTING
13100 NORTHWEST FREEWAY
SUITE 625,
HOUSTON, TEXAS 77040

FIRM NUMBER #13619

PROJECT NO: 25MA02	SCALE: NONE
DRAWN BY: GS	CHECKED: APB
DESIGN BY:	ENG APVL: PDN
DRAWING NO: 1100-PID-0002	REV A

DRAWING: 1100-pid-0002.dwg, PLOTTED BY: jason, PLOT DATE: ----, DRAWING LOCATION: c:\users\jason\onedrive - eng\sag's files - 25ma02 - aromatics utility scope cold eyes review\04 - design\04 - process\pids, (Border Rev1 5.16.25)

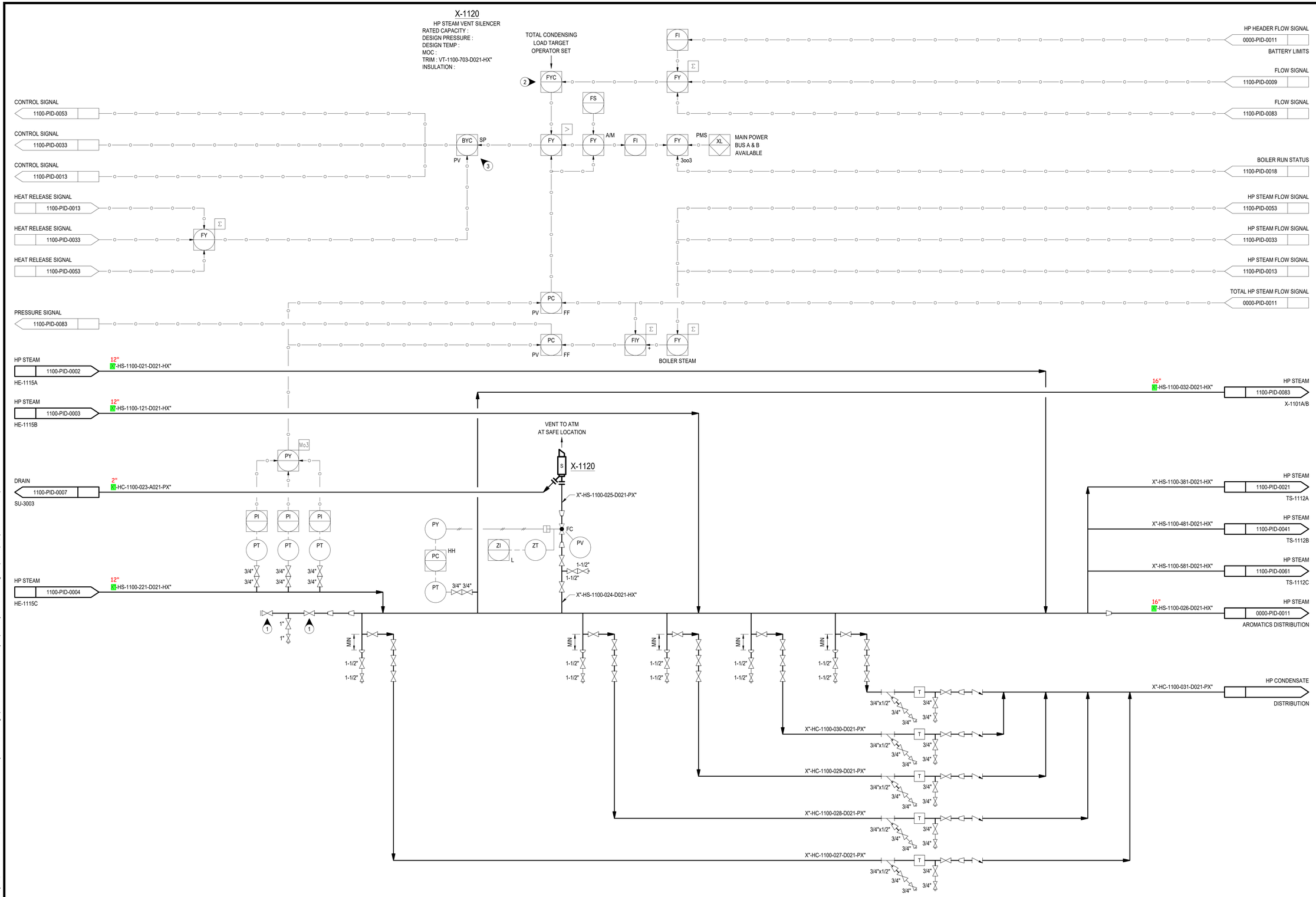

GENERAL NOTES

A. FOR PIPING AND INSTRUMENTATION LEGENDS AND SYMBOLS, SEE P&IDs 0000-PID-0001 THRU 0000-PID-00XX.

B. INSTRUMENT NUMBERS ON THIS P&ID ARE PREFIXED BY THE UNIT NUMBER ASSOCIATED WITH THIS P&ID UNLESS OTHERWISE SPECIFIED.

C. CONTROL VALVES AND BYPASS SIZES ARE PRELIMINARY AND WILL BE CONFIRMED DURING DETAIL DESIGN.

NOTES

1. VALVE FOR STEAM BLOWS OF HP SYSTEM.
2. DE-TUNED TO PROVIDE AVERAGING CONTROL ACTION. THE PROCESS VALUE OF THIS PID CONTROLLER SHOULD BE MOVING AVERAGE PV AND NOT A HEAVILY FILTERED VALUE.
3. BYC IS A LOAD ALLOCATOR (I-ONLY PID) THAT ACT AS FAST SECONDARY TO RE-DISTRIBUTE LOAD.

CHECK PRINT

NOT PUBLISHED, ALL RIGHTS RESERVED BY THE ENGINEER. DRAWINGS AND SPECIFICATIONS, AS INSTRUMENTS OF SERVICE, ARE ISSUED TO DESCRIBE DESIGN INTENT. THEY ARE NOT TO BE USED ON OTHER PROJECTS OR EXTENSIONS TO THIS PROJECT, EXCEPT BY AGREEMENT IN WRITING AND WITH APPROPRIATE COMPENSATION TO THE ENGINEER. CONTRACTOR, SUB-CONTRACTORS, & SUPPLIERS ARE RESPONSIBLE FOR CONFIRMING AND CORRELATING DIMENSIONS AND CONDITIONS AT THE JOB SITE, AND SHALL NOTIFY THE ENGINEER IMMEDIATELY OF ANY ERRORS OR DISCREPANCIES IN REGARD TO SUCH DRAWINGS, DESCRIBING DESIGN INTENT, SHALL NOT INDICATE EVERY DETAIL OR SYSTEM FOR CONSTRUCTION. CONTRACTOR, SUB-CONTRACTORS, AND SUPPLIERS SHALL BE RESPONSIBLE TO PROVIDE ADDITIONAL DRAWINGS AS NECESSARY FOR PERMITS, ERECTION, INSTALLATION, AND CO-ORDINATION OF ALL WORK. CONTRACTOR, SUB-CONTRACTORS, AND SUPPLIERS SHALL BE RESPONSIBLE FOR ALL LABOR AND MATERIALS REQUIRED IN ACCORDANCE WITH DESIGN INTENT. ALL MATERIALS SHALL BE NEW, UNLESS SPECIFIED OTHERWISE, AND SHALL BE INSTALLED LEVEL, PLUMB, STRAIGHT, AND TRUE TO LINE, IN ACCORDANCE WITH THE BEST PRACTICES OF THE TRADES. THE ENGINEER SHALL NOT BE RESPONSIBLE FOR CONSTRUCTION MEANS, METHODS, TECHNIQUES, SEQUENCES OR PROCEDURES, OR FOR SAFETY PRECAUTIONS AND PROGRAMS IN CONNECTION WITH THE WORK. ALL WORK SHALL BE PERFORMED IN ACCORDANCE WITH APPLICABLE CODES AND ORDINANCES.

DRAWING: 1100-pid-0006.dwg PLOTTED BY: jason. PLOT DATE: ---- DRAWING LOCATION: c:\users\jason\onedrive - engineg's files - 25ma02 - aromatics utility scope cold eyes review\04 - design\04 - process\pids. (Border Rev1 5.16.25)

REFERENCE DRAWINGS:

REV #	DATE	DESCRIPTION	DRWN	CHKD	APVD
A	12-05-25	ISSUED FOR APPROVAL	GS	APB	PDN

REV #	DATE	DESCRIPTION	DRWN	CHKD	APVD

MOTIVA

CLIENT: MOTIVA ENTERPRISES LLC
PLANT: PORT ARTHUR REFINERY
JOB NO:

PIPING & INSTRUMENTATION DIAGRAM
STEAM UNIT
HP STEAM HEADER

PROJ TITLE: AROMATICS UTILITY SCOPE REVIEW

SSP ENGINEERING & CONSULTING
13100 NORTHWEST FREEWAY
SUITE 625,
HOUSTON, TEXAS 77040

FIRM NUMBER #13619

PROJECT NO: 25MA02 | SCALE: NONE
DRAWN BY: GS | CHECKED: APB
DESIGN BY: | ENG APVL: PDN
DRAWING NO: 1100-PID-0006 | REV A

X-1130

MP STEAM VENT SILENCER
RATED CAPACITY :
DESIGN PRESSURE :
DESIGN TEMP :
MOC :
TRIM : VT-1100-041-B021-PX"
INSULATION :

GENERAL NOTES

A. FOR PIPING AND INSTRUMENTATION LEGENDS AND SYMBOLS, SEE P&IDs 0000-PID-0001 THRU 0000-PID-00XX.
B. INSTRUMENT NUMBERS ON THIS P&ID ARE PREFIXED BY THE UNIT NUMBER ASSOCIATED WITH THIS P&ID UNLESS OTHERWISE SPECIFIED.
C. CONTROL VALVES AND BYPASS SIZES ARE PRELIMINARY AND WILL BE CONFIRMED DURING DETAIL DESIGN.

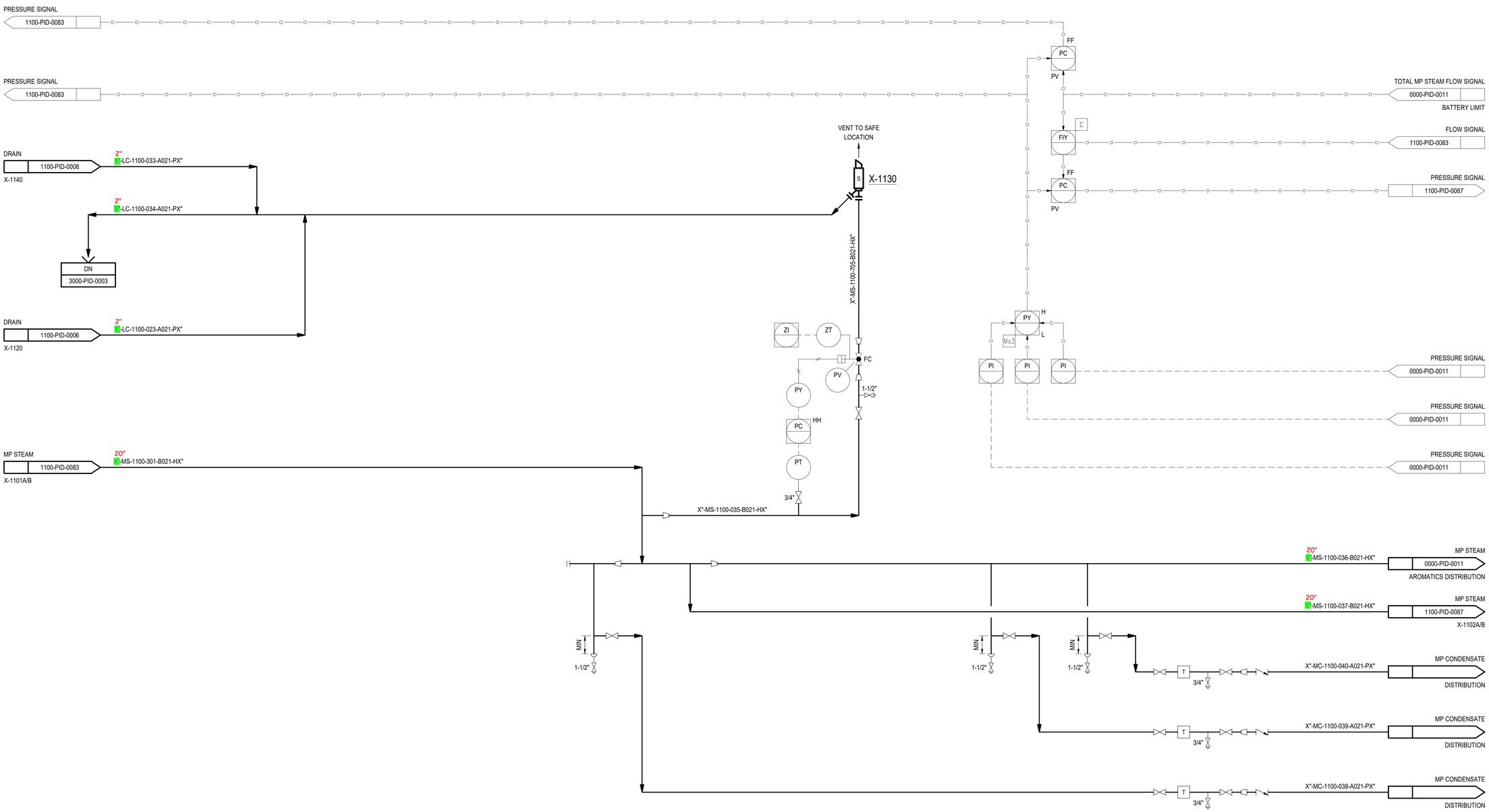

CHECK PRINT

NOT PUBLISHED. ALL RIGHTS RESERVED BY THE ENGINEER. DRAWINGS AND SPECIFICATIONS, AS INSTRUMENTS OF SERVICE, ARE ISSUED TO DESCRIBE DESIGN INTENT. THEY ARE NOT TO BE USED ON OTHER PROJECTS OR EXTENSIONS TO THIS PROJECT, EXCEPT BY AGREEMENT IN WRITING AND WITH APPROPRIATE COMPENSATION TO THE ENGINEER. CONTRACTOR, SUB-CONTRACTORS, & SUPPLIERS ARE RESPONSIBLE FOR CONFIRMING AND CORRELATING DIMENSIONS AND CONDITIONS AT THE JOB SITE, AND SHALL NOTIFY THE ENGINEER IMMEDIATELY OF ANY ERRORS OR DISCREPANCIES IN REGARD TO SUCH. DRAWINGS, DESCRIBING DESIGN INTENT, SHALL NOT INDICATE EVERY DETAIL OR SYSTEM FOR CONSTRUCTION. CONTRACTOR, SUB-CONTRACTORS, AND SUPPLIERS SHALL BE RESPONSIBLE TO PROVIDE ADDITIONAL DRAWINGS AS NECESSARY FOR PERMITS, ERECTION, INSTALLATION, AND CO-ORDINATION OF ALL WORK. CONTRACTOR, SUB-CONTRACTORS, AND SUPPLIERS SHALL BE RESPONSIBLE FOR ALL LABOR AND MATERIALS REQUIRED IN ACCORDANCE WITH DESIGN INTENT. ALL MATERIALS SHALL BE NEW. UNLESS SPECIFIED OTHERWISE, AND SHALL BE INSTALLED LEVEL, PLUMB, STRAIGHT, AND TRUE TO LINE, IN ACCORDANCE WITH THE BEST PRACTICES OF THE TRADES. THE ENGINEER SHALL NOT BE RESPONSIBLE FOR CONSTRUCTION MEANS, METHODS, TECHNIQUES, SEQUENCES OR PROCEDURES, OR FOR SAFETY PRECAUTIONS AND PROGRAMS IN CONNECTION WITH THE WORK. ALL WORK SHALL BE PERFORMED IN ACCORDANCE WITH APPLICABLE CODES AND ORDINANCES.

REFERENCE DRAWINGS:

REV #	DATE	DESCRIPTION	DRWN	CHKD	APVD
A	12-05-25	ISSUED FOR APPROVAL	GS	DLH	PDN

REV #	DATE	DESCRIPTION	DRWN	CHKD	APVD

MOTIVA

CLIENT: MOTIVA ENTERPRISES LLC
PLANT: PORT ARTHUR REFINERY
JOB NO:

PIPING & INSTRUMENTATION DIAGRAM
STEAM UNIT
MP STEAM HEADER

PROJ TITLE: AROMATICS UTILITY SCOPE REVIEW

SSP ENGINEERING & CONSULTING
13100 NORTHWEST FREEWAY
SUITE 625,
HOUSTON, TEXAS 77040

FIRM NUMBER #13619

PROJECT NO: 25MA02	SCALE: NONE
DRAWN BY: GS	CHECKED: DLH
DESIGN BY:	ENG APVL: PDN
DRAWING NO: 1100-PID-0007	REV A

DRAWING: 1100-pid-0007.dwg, PLOTTED BY: jason, PLOT DATE: ----, DRAWING LOCATION: c:\users\jason\onedrive - engineer's files - 25ma02 - aromatics utility scope cold eyes review\04 - design\04 - process\pids, (Border Rev1 5.16.25)

X-1140

LP STEAM VENT SILENCER
RATED CAPACITY :
DESIGN PRESSURE :
DESIGN TEMP :
MOC :
TRIM : VT-1100-704-A021-HX"
INSULATION :

GENERAL NOTES

A. FOR PIPING AND INSTRUMENTATION LEGENDS AND SYMBOLS, SEE P&IDs 0000-PID-0001 THRU 0000-PID-00XX.

B. INSTRUMENT NUMBERS ON THIS P&ID ARE PREFIXED BY THE UNIT NUMBER ASSOCIATED WITH THIS P&ID UNLESS OTHERWISE SPECIFIED.

C. CONTROL VALVES AND BYPASS SIZES ARE PRELIMINARY AND WILL BE CONFIRMED DURING DETAIL DESIGN.

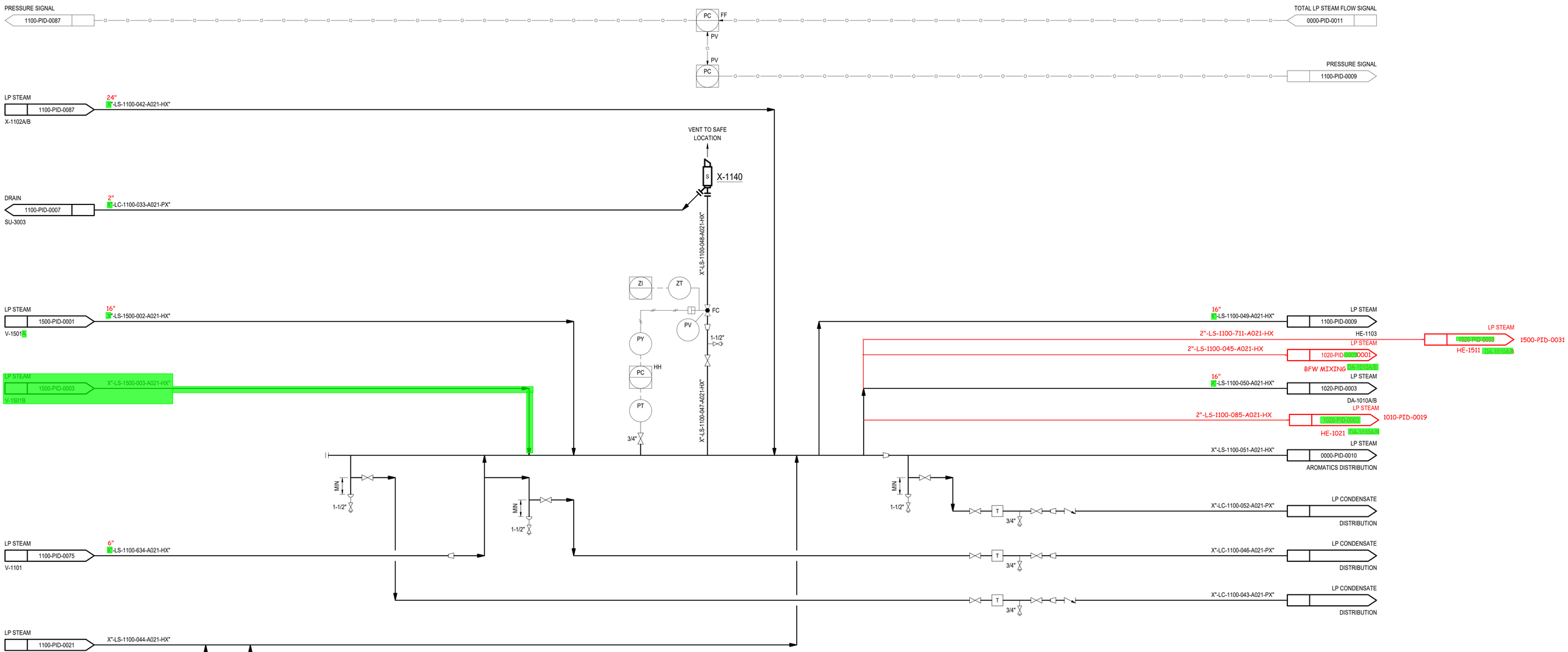

CHECK PRINT

NOT PUBLISHED. ALL RIGHTS RESERVED BY THE ENGINEER. DRAWINGS AND SPECIFICATIONS, AS INSTRUMENTS OF SERVICE, ARE ISSUED TO DESCRIBE DESIGN INTENT. THEY ARE NOT TO BE USED ON OTHER PROJECTS OR EXTENSIONS TO THIS PROJECT, EXCEPT BY AGREEMENT IN WRITING AND WITH APPROPRIATE COMPENSATION TO THE ENGINEER. CONTRACTOR, SUB-CONTRACTORS, & SUPPLIERS ARE RESPONSIBLE FOR CONFIRMING AND CORRELATING DIMENSIONS AND CONDITIONS AT THE JOB SITE, AND SHALL NOTIFY THE ENGINEER IMMEDIATELY OF ANY ERRORS OR DISCREPANCIES IN REGARD TO SUCH. DRAWINGS, DESCRIBING DESIGN INTENT, SHALL NOT INDICATE EVERY DETAIL OR SYSTEM FOR CONSTRUCTION. CONTRACTOR, SUB-CONTRACTORS, AND SUPPLIERS SHALL BE RESPONSIBLE TO PROVIDE ADDITIONAL DRAWINGS AS NECESSARY FOR PERMITS, ERECTION, INSTALLATION, AND CO-ORDINATION OF ALL WORK. CONTRACTOR, SUB-CONTRACTORS, AND SUPPLIERS SHALL BE RESPONSIBLE FOR ALL LABOR AND MATERIALS REQUIRED IN ACCORDANCE WITH DESIGN INTENT. ALL MATERIALS SHALL BE NEW, UNLESS SPECIFIED OTHERWISE, AND SHALL BE INSTALLED LEVEL, PLUMB, STRAIGHT, AND TRUE TO LINE, IN ACCORDANCE WITH THE BEST PRACTICES OF THE TRADES. THE ENGINEER SHALL NOT BE RESPONSIBLE FOR CONSTRUCTION MEANS, METHODS, TECHNIQUES, SEQUENCES OR PROCEDURES, OR FOR SAFETY PRECAUTIONS AND PROGRAMS IN CONNECTION WITH THE WORK. ALL WORK SHALL BE PERFORMED IN ACCORDANCE WITH APPLICABLE CODES AND ORDINANCES.

REFERENCE DRAWINGS:

REV #	DATE	DESCRIPTION	DRWN	CHKD	APVD
A	12-05-25	ISSUED FOR APPROVAL	GS	DLH	PDN

REV #	DATE	DESCRIPTION	DRWN	CHKD	APVD

MOTIVA

CLIENT: MOTIVA ENTERPRISES LLC
PLANT: PORT ARTHUR REFINERY
JOB NO:

PIPING & INSTRUMENTATION DIAGRAM
STEAM UNIT
LP STEAM HEADER

PROJ TITLE: AROMATICS UTILITY SCOPE REVIEW

SSP ENGINEERING & CONSULTING
13100 NORTHWEST FREEWAY
SUITE 625,
HOUSTON, TEXAS 77040

FIRM NUMBER #13619

PROJECT NO: 25MA02	SCALE: NONE
DRAWN BY: GS	CHECKED: APB
DESIGN BY:	ENG APVL: PDN
DRAWING NO: 1100-PID-0008	REV A

DRAWING: 1100-pid-0008.dwg, PLOTTED BY: jason, PLOT DATE: ----, DRAWING LOCATION: c:\users\jason\onedrive - engineer's files - 25ma02 - aromatics utility scope cold eyes review\04 - design\04 - process\pids, (Border Rev1 5.16.25)

HE-1103

LP STEAM VENT CONDENSER
RATED DUTY :
NUMBER OF BAYS :
DESIGN TEMP :
RATED POWER :
MOC :
TRIM : VT-1100-057-A021-PX"
INSULATION :

GENERAL NOTES

A. FOR PIPING AND INSTRUMENTATION LEGENDS AND SYMBOLS, SEE P&IDs 0000-PID-0001 THRU 0000-PID-00XX.

B. INSTRUMENT NUMBERS ON THIS P&ID ARE PREFIXED BY THE UNIT NUMBER ASSOCIATED WITH THIS P&ID UNLESS OTHERWISE SPECIFIED.

C. CONTROL VALVES AND BYPASS SIZES ARE PRELIMINARY AND WILL BE CONFIRMED DURING DETAIL DESIGN.

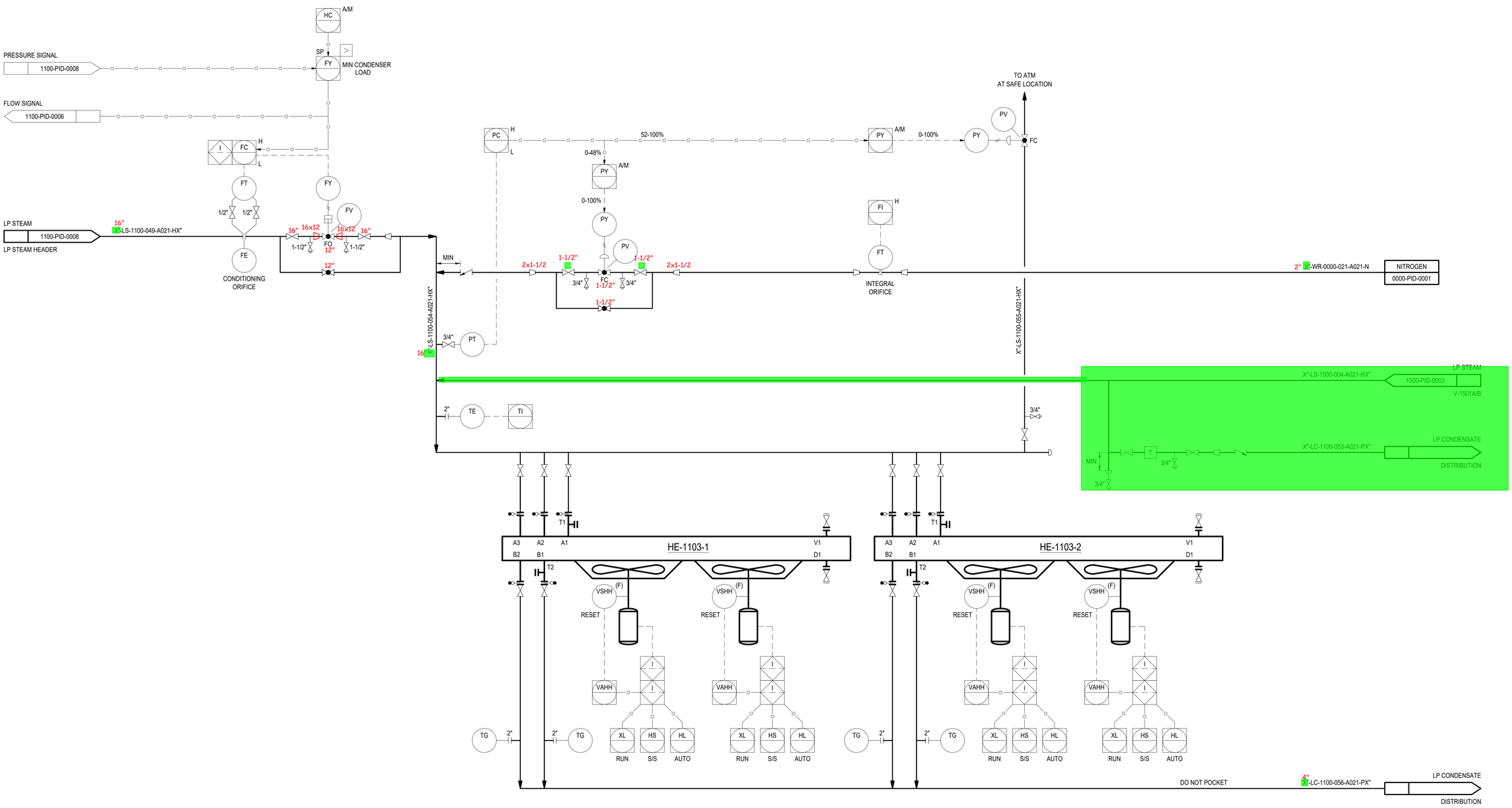

CHECK PRINT

NOT PUBLISHED. ALL RIGHTS RESERVED BY THE ENGINEER. DRAWINGS AND SPECIFICATIONS, AS INSTRUMENTS OF SERVICE, ARE ISSUED TO DESCRIBE DESIGN INTENT. THEY ARE NOT TO BE USED ON OTHER PROJECTS OR EXTENSIONS TO THIS PROJECT, EXCEPT BY AGREEMENT IN WRITING AND WITH APPROPRIATE COMPENSATION TO THE ENGINEER. CONTRACTOR, SUB-CONTRACTORS, & SUPPLIERS ARE RESPONSIBLE FOR CONFIRMING AND CORRELATING DIMENSIONS AND CONDITIONS AT THE JOB SITE, AND SHALL NOTIFY THE ENGINEER IMMEDIATELY OF ANY ERRORS OR DISCREPANCIES IN REGARD TO SUCH DRAWINGS, DESCRIBING DESIGN INTENT, SHALL NOT INDICATE EVERY DETAIL OR SYSTEM FOR CONSTRUCTION. CONTRACTOR, SUB-CONTRACTORS, AND SUPPLIERS SHALL BE RESPONSIBLE TO PROVIDE ADDITIONAL DRAWINGS AS NECESSARY FOR PERMITS, ERECTION, INSTALLATION, AND CO-ORDINATION OF ALL WORK. CONTRACTOR, SUB-CONTRACTORS, AND SUPPLIERS SHALL BE RESPONSIBLE FOR ALL LABOR AND MATERIALS REQUIRED IN ACCORDANCE WITH DESIGN INTENT. ALL MATERIALS SHALL BE NEW, UNLESS SPECIFIED OTHERWISE, AND SHALL BE INSTALLED LEVEL, PLUMB, STRAIGHT, AND TRUE TO LINE, IN ACCORDANCE WITH THE BEST PRACTICES OF THE TRADES. THE ENGINEER SHALL NOT BE RESPONSIBLE FOR CONSTRUCTION MEANS, METHODS, TECHNIQUES, SEQUENCES OR PROCEDURES, OR FOR SAFETY PRECAUTIONS AND PROGRAMS IN CONNECTION WITH THE WORK. ALL WORK SHALL BE PERFORMED IN ACCORDANCE WITH APPLICABLE CODES AND ORDINANCES.

REFERENCE DRAWINGS:

REV #	DATE	DESCRIPTION	DRWN	CHKD	APVD
A	12-05-25	ISSUED FOR APPROVAL	GS	APB	PDN

REV #	DATE	DESCRIPTION	DRWN	CHKD	APVD

MOTIVA

CLIENT: MOTIVA ENTERPRISES LLC
PLANT: PORT ARTHUR REFINERY
JOB NO:

PIPING & INSTRUMENTATION DIAGRAM
STEAM UNIT
LP STEAM VENT CONDENSER

PROJ TITLE: AROMATICS UTILITY SCOPE REVIEW

SSP ENGINEERING & CONSULTING
13100 NORTHWEST FREEWAY
SUITE 625,
HOUSTON, TEXAS 77040

FIRM NUMBER #13619

PROJECT NO: 25MA02	SCALE: NONE
DRAWN BY: GS	CHECKED: APB
DESIGN BY:	ENG APVL: PDN
DRAWING NO: 1100-PID-0009	REV A

DRAWING: 1100-pid-0009.dwg PLOTTED BY: ssp_t PLOT DATE: ---- DRAWING LOCATION: c:\users\ssp_fang\ssp - projects\motiva\25ma02 - aromatics utility scope cold eyes review\04 - design\04 - processlpids, (Border Rev1 5.16.25)

GENERAL NOTES

A. FOR PIPING AND INSTRUMENTATION LEGENDS AND SYMBOLS, SEE P&IDs 0000-PID-0001 THRU 0000-PID-00XX.

B. INSTRUMENT NUMBERS ON THIS P&ID ARE PREFIXED BY THE UNIT NUMBER ASSOCIATED WITH THIS P&ID UNLESS OTHERWISE SPECIFIED.

C. CONTROL VALVES AND BYPASS SIZES ARE PRELIMINARY AND WILL BE CONFIRMED DURING DETAIL DESIGN.

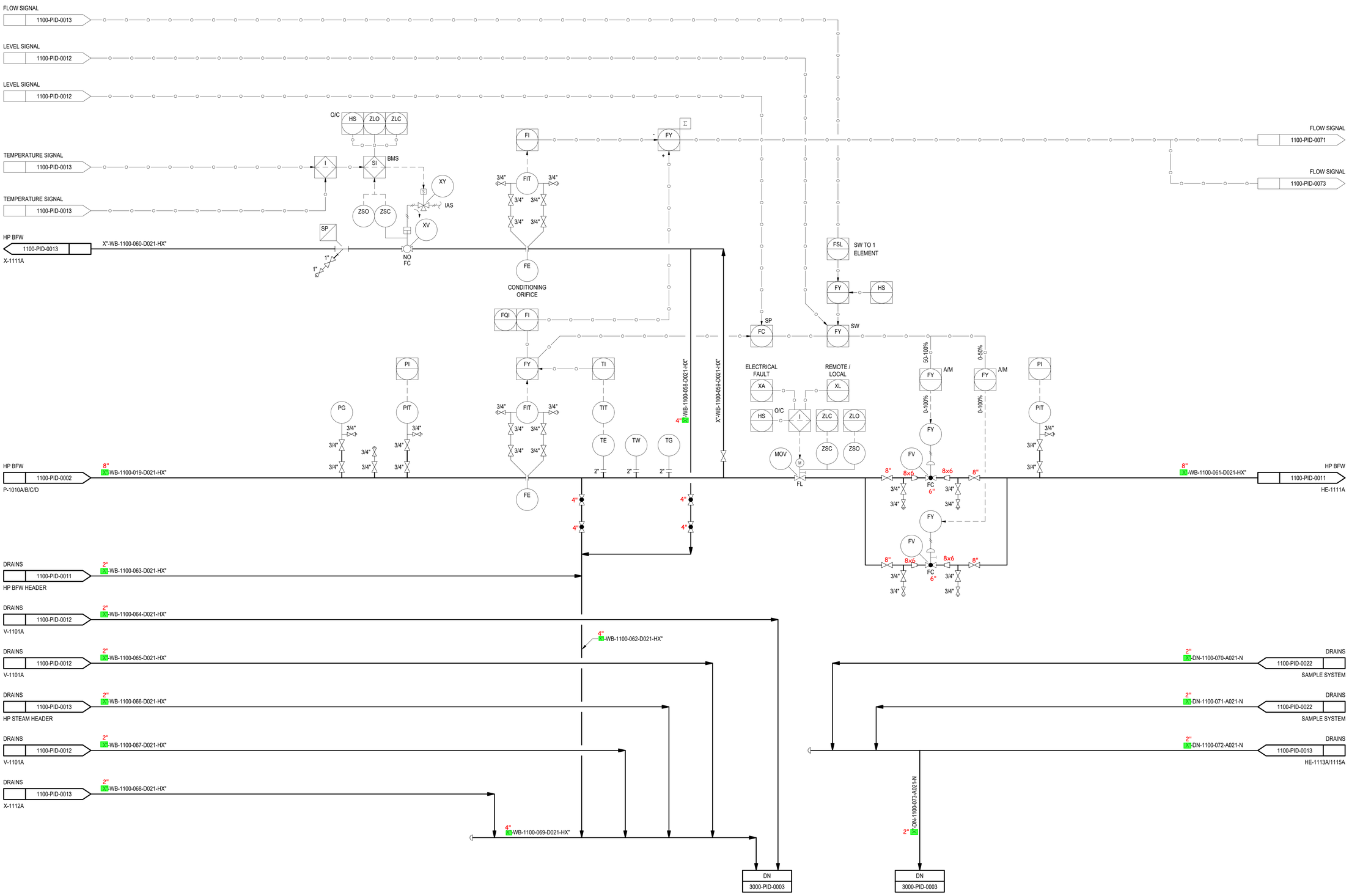

CHECK PRINT

NOT PUBLISHED. ALL RIGHTS RESERVED BY THE ENGINEER. DRAWINGS AND SPECIFICATIONS, AS INSTRUMENTS OF SERVICE, ARE ISSUED TO DESCRIBE DESIGN INTENT. THEY ARE NOT TO BE USED ON OTHER PROJECTS OR EXTENSIONS TO THIS PROJECT, EXCEPT BY AGREEMENT IN WRITING AND WITH APPROPRIATE COMPENSATION TO THE ENGINEER. CONTRACTOR, SUB-CONTRACTORS, & SUPPLIERS ARE RESPONSIBLE FOR CONFIRMING AND CORRELATING DIMENSIONS AND CONDITIONS AT THE JOB SITE, AND SHALL NOTIFY THE ENGINEER IMMEDIATELY OF ANY ERRORS OR DISCREPANCIES IN REGARD TO SUCH DRAWINGS. DESCRIBING DESIGN INTENT, SHALL NOT INDICATE EVERY DETAIL OR SYSTEM FOR CONSTRUCTION. CONTRACTOR, SUB-CONTRACTORS, AND SUPPLIERS SHALL BE RESPONSIBLE TO PROVIDE ADDITIONAL DRAWINGS AS NECESSARY FOR PERMITS, ERECTION, INSTALLATION, AND CO-ORDINATION OF ALL WORK. CONTRACTOR, SUB-CONTRACTORS, AND SUPPLIERS SHALL BE RESPONSIBLE FOR ALL LABOR AND MATERIALS REQUIRED IN ACCORDANCE WITH DESIGN INTENT. ALL MATERIALS SHALL BE NEW, UNLESS SPECIFIED OTHERWISE, AND SHALL BE INSTALLED LEVEL, PLUMB, STRAIGHT, AND TRUE TO LINE, IN ACCORDANCE WITH THE BEST PRACTICES OF THE TRADES. THE ENGINEER SHALL NOT BE RESPONSIBLE FOR CONSTRUCTION MEANS, METHODS, TECHNIQUES, SEQUENCES OR PROCEDURES, OR FOR SAFETY PRECAUTIONS AND PROGRAMS IN CONNECTION WITH THE WORK. ALL WORK SHALL BE PERFORMED IN ACCORDANCE WITH APPLICABLE CODES AND ORDINANCES.

REFERENCE DRAWINGS:

REV #	DATE	DESCRIPTION	DRWN	CHKD	APVD
A	12-05-25	ISSUED FOR APPROVAL	GS	DLH	PDN

REV #	DATE	DESCRIPTION	DRWN	CHKD	APVD

MOTIVA

CLIENT: MOTIVA ENTERPRISES LLC
PLANT: PORT ARTHUR REFINERY
JOB NO:

PIPING & INSTRUMENTATION DIAGRAM

STEAM UNIT
BOILER A
HP BOILER FEED WATER HEADER

PROJ TITLE: AROMATICS UTILITY SCOPE REVIEW

SSP ENGINEERING & CONSULTING
13100 NORTHWEST FREEWAY
SUITE 625,
HOUSTON, TEXAS 77040

FIRM NUMBER #13619

PROJECT NO: 25MA02	SCALE: NONE
DRAWN BY: GS	CHECKED: APB
DESIGN BY:	ENG APVL: PDN
DRAWING NO: 1100-PID-0010	REV A

DRAWING: 1100-pid-0010.dwg, PLOTTED BY: jason, PLOT DATE: ----, DRAWING LOCATION: c:\users\jason\onedrive - engineg's files - 25ma02 - aromatics utility scope cold eyes review\04 - design\04 - process\pids, (Border Rev1 5.16.25)

HE-1111A

INTERNAL ECONOMIZER
RATED DUTY :
SURFACE AREA :
DESIGN PRESSURE :
DESIGN TEMP :
MOC :
TRIM : VT-1100-082-D021-HX"
INSULATION :

HE-1112A

EXTERNAL ECONOMIZER
RATED DUTY :
SURFACE AREA :
DESIGN PRESSURE :
DESIGN TEMP :
MOC :
TRIM : VT-1100-083-D021-HX"
INSULATION :

GENERAL NOTES

A. FOR PIPING AND INSTRUMENTATION LEGENDS AND SYMBOLS, SEE P&IDs 0000-PID-0001 THRU 0000-PID-00XX.
B. INSTRUMENT NUMBERS ON THIS P&ID ARE PREFIXED BY THE UNIT NUMBER ASSOCIATED WITH THIS P&ID UNLESS OTHERWISE SPECIFIED.
C. CONTROL VALVES AND BYPASS SIZES ARE PRELIMINARY AND WILL BE CONFIRMED DURING DETAIL DESIGN.

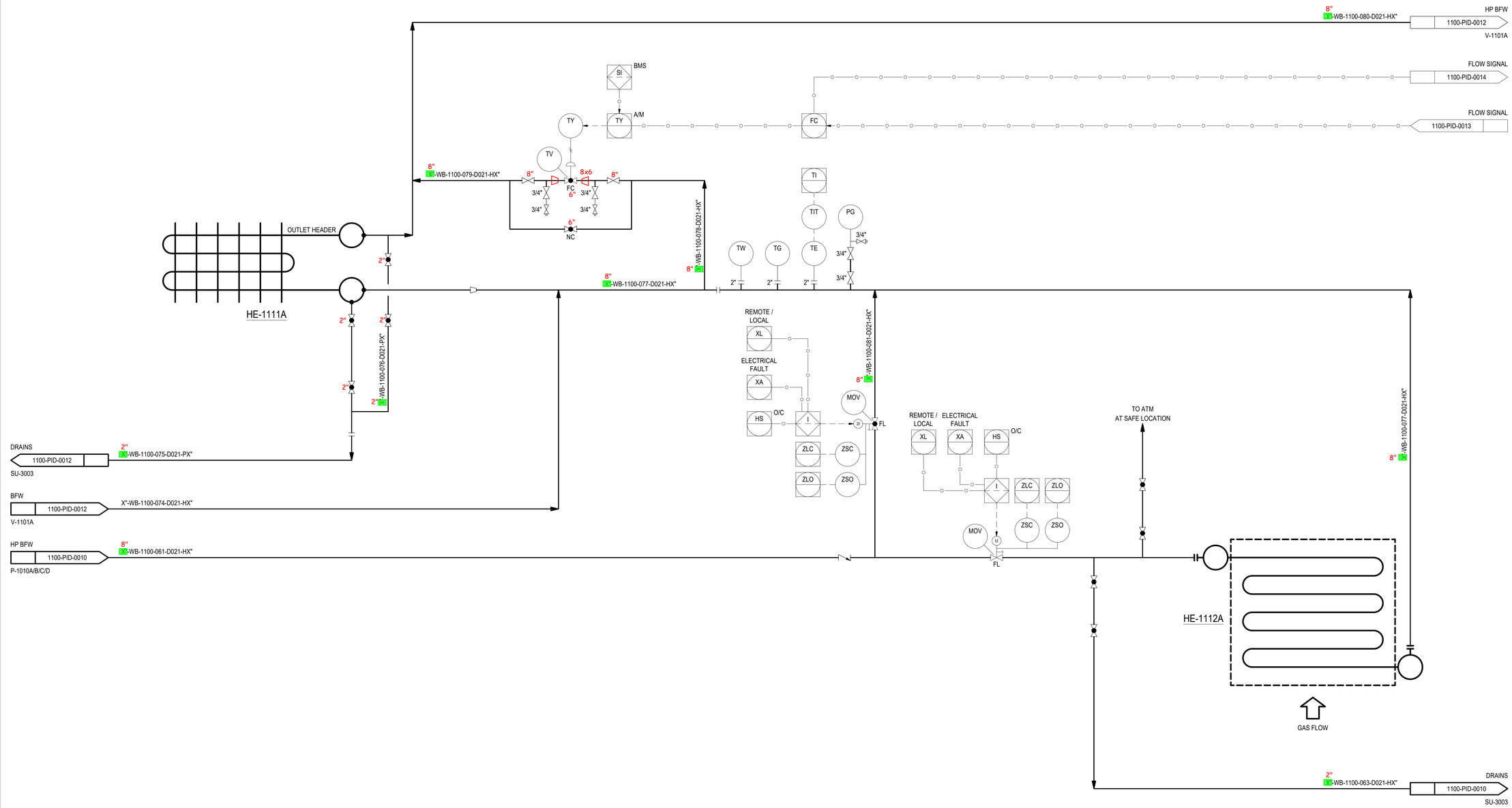

CHECK PRINT

NOT PUBLISHED. ALL RIGHTS RESERVED BY THE ENGINEER. DRAWINGS AND SPECIFICATIONS, AS INSTRUMENTS OF SERVICE, ARE ISSUED TO DESCRIBE DESIGN INTENT. THEY ARE NOT TO BE USED ON OTHER PROJECTS OR EXTENSIONS TO THIS PROJECT, EXCEPT BY AGREEMENT IN WRITING AND WITH APPROPRIATE COMPENSATION TO THE ENGINEER. CONTRACTOR, SUB-CONTRACTORS, & SUPPLIERS ARE RESPONSIBLE FOR CONFIRMING AND CORRELATING DIMENSIONS AND CONDITIONS AT THE JOB SITE, AND SHALL NOTIFY THE ENGINEER IMMEDIATELY OF ANY ERRORS OR DISCREPANCIES IN REGARD TO SUCH DRAWINGS. DESCRIBING DESIGN INTENT, SHALL NOT INDICATE EVERY DETAIL OR SYSTEM FOR CONSTRUCTION. CONTRACTOR, SUB-CONTRACTORS, AND SUPPLIERS SHALL BE RESPONSIBLE TO PROVIDE ADDITIONAL DRAWINGS AS NECESSARY FOR PERMITS, ERECTION, INSTALLATION, AND CO-ORDINATION OF ALL WORK. CONTRACTOR, SUB-CONTRACTORS, AND SUPPLIERS SHALL BE RESPONSIBLE FOR ALL LABOR AND MATERIALS REQUIRED IN ACCORDANCE WITH DESIGN INTENT. ALL MATERIALS SHALL BE NEW, UNLESS SPECIFIED OTHERWISE, AND SHALL BE INSTALLED LEVEL, PLUMB, STRAIGHT, AND TRUE TO LINE, IN ACCORDANCE WITH THE BEST PRACTICES OF THE TRADES. THE ENGINEER SHALL NOT BE RESPONSIBLE FOR CONSTRUCTION MEANS, METHODS, TECHNIQUES, SEQUENCES OR PROCEDURES, OR FOR SAFETY PRECAUTIONS AND PROGRAMS IN CONNECTION WITH THE WORK. ALL WORK SHALL BE PERFORMED IN ACCORDANCE WITH APPLICABLE CODES AND ORDINANCES.

REFERENCE DRAWINGS:

REV #	DATE	DESCRIPTION	DRWN	CHKD	APVD
A	12-05-25	ISSUED FOR APPROVAL	GS	DLH	PDN

REV #	DATE	DESCRIPTION	DRWN	CHKD	APVD

MOTIVA

CLIENT: MOTIVA ENTERPRISES LLC
PLANT: PORT ARTHUR REFINERY
JOB NO:

PIPING & INSTRUMENTATION DIAGRAM
STEAM UNIT
BOILER A
EXTERNAL AND INTERNAL ECONOMIZER

PROJ TITLE: AROMATICS UTILITY SCOPE REVIEW

SSP ENGINEERING & CONSULTING
13100 NORTHWEST FREEWAY
SUITE 625,
HOUSTON, TEXAS 77040

FIRM NUMBER #13619

PROJECT NO: 25MA02 | SCALE: NONE
DRAWN BY: GS | CHECKED: APB
DESIGN BY: | ENG APVL: PDN
DRAWING NO: **1100-PID-0011** | REV **A**

DRAWING: 1100-pid-0011.dwg, PLOTTED BY: ssp_t, PLOT DATE: ----, DRAWING LOCATION: c:\users\ssp_fung\ssp - projects\motiva\25ma02 - aromatics utility scope cold eyes review\04 - design\04 - processpids, (Border Rev1 5.16.25)

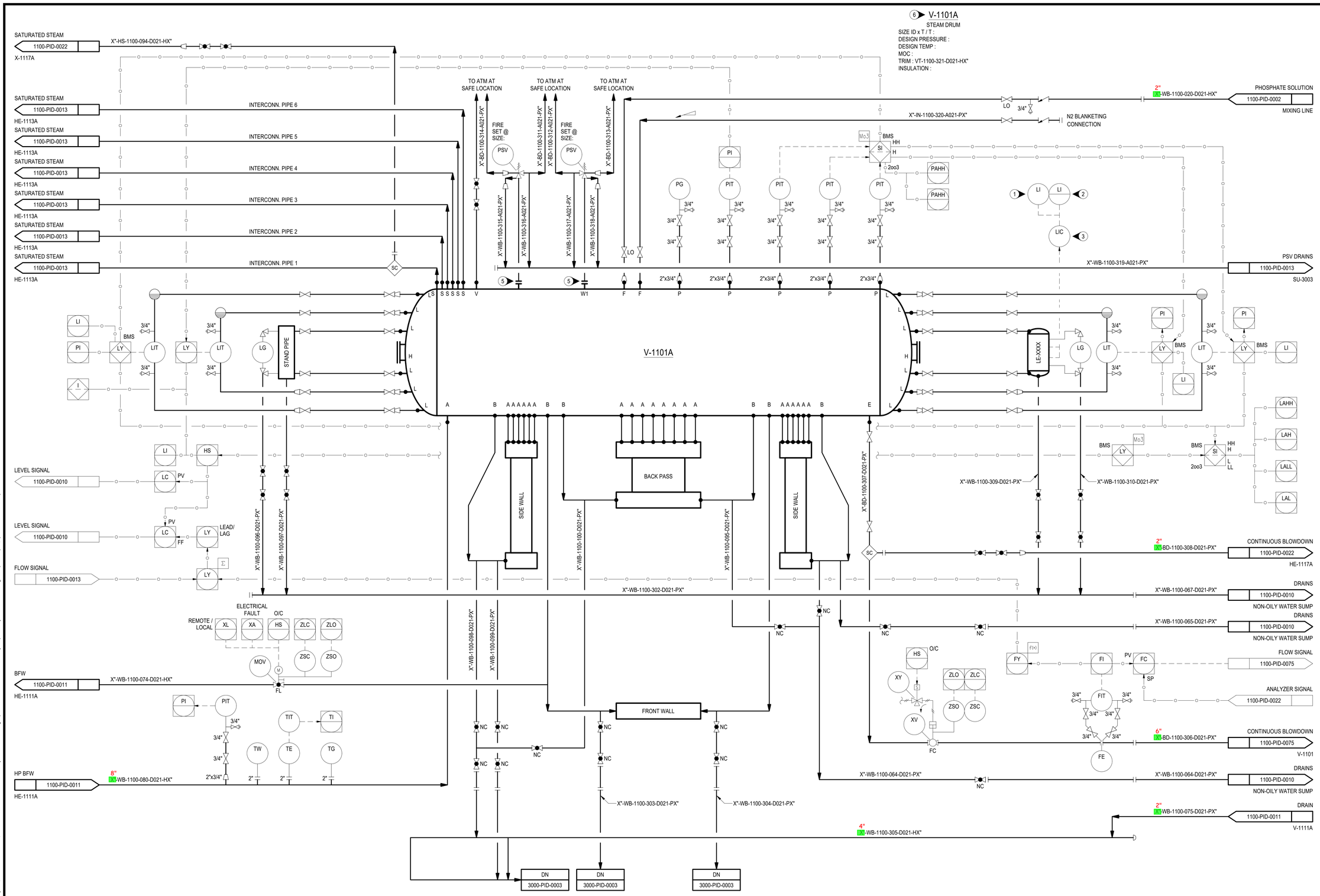

GENERAL NOTES

A. FOR PIPING AND INSTRUMENTATION LEGENDS AND SYMBOLS, SEE P&IDs 0000-PID-0001 THRU 0000-PID-00XX.

B. INSTRUMENT NUMBERS ON THIS P&ID ARE PREFIXED BY THE UNIT NUMBER ASSOCIATED WITH THIS P&ID UNLESS OTHERWISE SPECIFIED.

C. CONTROL VALVES AND BYPASS SIZES ARE PRELIMINARY AND WILL BE CONFIRMED DURING DETAIL DESIGN.

NOTES

1. LEVEL INDICATOR MOUNTED LOCALLY AT GRADE ELEVATION.
2. LEVEL INDICATOR MOUNTED IN CONTROL ROOM.
3. WIRING AND JUNCTION BOX INTEGRAL WITH WATER COLUMN.
4. DRUM CENTER LINE (DCL).
5. THESE CONNECTIONS ARE LOCATED ON STEAM DRUM HEAD.
6. BOILER CONFIGURATION IS TYPICAL. DRAWING WILL BE MODIFIED ONCE BOILER IS SELECTED.

CHECK PRINT

NOT PUBLISHED. ALL RIGHTS RESERVED BY THE ENGINEER. DRAWINGS AND SPECIFICATIONS, AS INSTRUMENTS OF SERVICE, ARE ISSUED TO DESCRIBE DESIGN INTENT. THEY ARE NOT TO BE USED ON OTHER PROJECTS OR EXTENSIONS TO THIS PROJECT, EXCEPT BY AGREEMENT IN WRITING AND WITH APPROPRIATE COMPENSATION TO THE ENGINEER. CONTRACTOR, SUB-CONTRACTORS, & SUPPLIERS ARE RESPONSIBLE FOR CONFIRMING AND CORRELATING DIMENSIONS AND CONDITIONS AT THE JOB SITE, AND SHALL NOTIFY THE ENGINEER IMMEDIATELY OF ANY ERRORS OR DISCREPANCIES IN REGARD TO SUCH. DRAWINGS, DESCRIBING DESIGN INTENT, SHALL NOT INDICATE EVERY DETAIL OR SYSTEM FOR CONSTRUCTION. CONTRACTOR, SUB-CONTRACTORS, AND SUPPLIERS SHALL BE RESPONSIBLE TO PROVIDE ADDITIONAL DRAWINGS AS NECESSARY FOR PERMITS, ERECTION, INSTALLATION, AND CO-ORDINATION OF ALL WORK. CONTRACTOR, SUB-CONTRACTORS, AND SUPPLIERS SHALL BE RESPONSIBLE FOR ALL LABOR AND MATERIALS REQUIRED IN ACCORDANCE WITH DESIGN INTENT. ALL MATERIALS SHALL BE NEW, UNLESS SPECIFIED OTHERWISE, AND SHALL BE INSTALLED LEVEL, PLUMB, STRAIGHT, AND TRUE TO LINE, IN ACCORDANCE WITH THE BEST PRACTICES OF THE TRADES. THE ENGINEER SHALL NOT BE RESPONSIBLE FOR CONSTRUCTION MEANS, METHODS, TECHNIQUES, SEQUENCES OR PROCEDURES, OR FOR SAFETY PRECAUTIONS AND PROGRAMS IN CONNECTION WITH THE WORK. ALL WORK SHALL BE PERFORMED IN ACCORDANCE WITH APPLICABLE CODES AND ORDINANCES.

REFERENCE DRAWINGS:

REV #	DATE	DESCRIPTION	DRWN	CHKD	APVD
A	12-05-25	ISSUED FOR APPROVAL	GS	DLH	PDN

REV #	DATE	DESCRIPTION	DRWN	CHKD	APVD

MOTIVA

CLIENT: MOTIVA ENTERPRISES LLC
PLANT: PORT ARTHUR REFINERY
JOB NO:

PIPING & INSTRUMENTATION DIAGRAM

STEAM UNIT
BOILER A
STEAM DRUM

PROJ TITLE: AROMATICS UTILITY SCOPE REVIEW

SSP ENGINEERING & CONSULTING
13100 NORTHWEST FREEWAY
SUITE 625,
HOUSTON, TEXAS 77040

FIRM NUMBER #13619

PROJECT NO: 25MA02	SCALE: NONE
DRAWN BY: GS	CHECKED: APB
DESIGN BY:	ENG APVL: PDN
DRAWING NO: 1100-PID-0012	REV A

DRAWING : 1100-pid-0012.dwg, PLOTTED BY : jason, PLOT DATE : ----, DRAWING LOCATION : c:\users\jason\onedrive - engineer's files - 25ma02 - aromatics utility scope cold eyes review\04 - design\04 - process\pids, (Border Rev1 5.16.25)

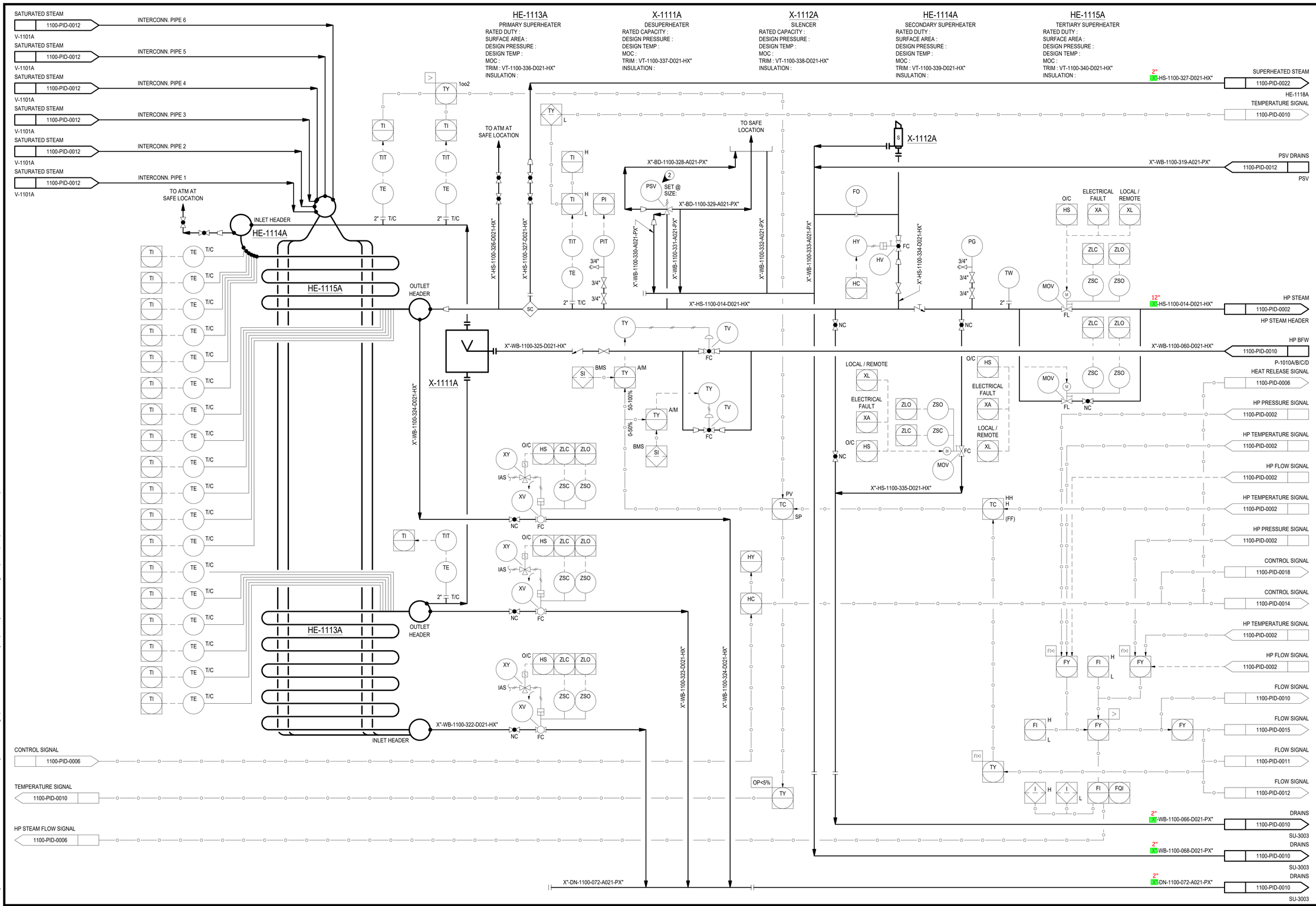

GENERAL NOTES

A. FOR PIPING AND INSTRUMENTATION LEGENDS AND SYMBOLS, SEE P&IDs 0000-PID-0001 THRU 0000-PID-00XX.

B. INSTRUMENT NUMBERS ON THIS P&ID ARE PREFIXED BY THE UNIT NUMBER ASSOCIATED WITH THIS P&ID UNLESS OTHERWISE SPECIFIED.

C. CONTROL VALVES AND BYPASS SIZES ARE PRELIMINARY AND WILL BE CONFIRMED DURING DETAIL DESIGN.

NOTES

1. BOILER CONFIGURATION IS TYPICAL. DRAWING WILL BE MODIFIED ONCE BOILER IS SELECTED.
2. SIZE AND NUMBER OF PSV WILL BE DETERMINED IN SUBSEQUENT PHASE.

CHECK PRINT

NOT PUBLISHED. ALL RIGHTS RESERVED BY THE ENGINEER. DRAWINGS AND SPECIFICATIONS, AS INSTRUMENTS OF SERVICE, ARE ISSUED TO DESCRIBE DESIGN INTENT. THEY ARE NOT TO BE USED ON OTHER PROJECTS OR EXTENSIONS TO THIS PROJECT, EXCEPT BY AGREEMENT IN WRITING AND WITH APPROPRIATE COMPENSATION TO THE ENGINEER. CONTRACTOR, SUB-CONTRACTORS, & SUPPLIERS ARE RESPONSIBLE FOR CONFIRMING AND CORRELATING DIMENSIONS AND CONDITIONS AT THE JOB SITE, AND SHALL NOTIFY THE ENGINEER IMMEDIATELY OF ANY ERRORS OR DISCREPANCIES IN REGARD TO SUCH DRAWINGS, DESCRIBING DESIGN INTENT, SHALL NOT INDICATE EVERY DETAIL OR SYSTEM FOR CONSTRUCTION. CONTRACTOR, SUB-CONTRACTORS, AND SUPPLIERS SHALL BE RESPONSIBLE TO PROVIDE ADDITIONAL DRAWINGS AS NECESSARY FOR PERMITS, ERECTION, INSTALLATION, AND CO-ORDINATION OF ALL WORK. CONTRACTOR, SUB-CONTRACTORS, AND SUPPLIERS SHALL BE RESPONSIBLE FOR ALL LABOR AND MATERIALS REQUIRED IN ACCORDANCE WITH DESIGN INTENT. ALL MATERIALS SHALL BE NEW, UNLESS SPECIFIED OTHERWISE, AND SHALL BE INSTALLED LEVEL, PLUMB, STRAIGHT, AND TRUE TO LINE, IN ACCORDANCE WITH THE BEST PRACTICES OF THE TRADES. THE ENGINEER SHALL NOT BE RESPONSIBLE FOR CONSTRUCTION MEANS, METHODS, TECHNIQUES, SEQUENCES OR PROCEDURES, OR FOR SAFETY PRECAUTIONS AND PROGRAMS IN CONNECTION WITH THE WORK. ALL WORK SHALL BE PERFORMED IN ACCORDANCE WITH APPLICABLE CODES AND ORDINANCES.

REFERENCE DRAWINGS:

REV #	DATE	DESCRIPTION	DRWN	CHKD	APVD
A	12-05-25	ISSUED FOR APPROVAL	GS	DLH	PDN

REV #	DATE	DESCRIPTION	DRWN	CHKD	APVD

MOTIVA

CLIENT: MOTIVA ENTERPRISES LLC
PLANT: PORT ARTHUR REFINERY
JOB NO:

PIPING & INSTRUMENTATION DIAGRAM

STEAM UNIT
BOILER A
SUPERHEATER

PROJ TITLE: AROMATICS UTILITY SCOPE REVIEW

SSP ENGINEERING & CONSULTING
13100 NORTHWEST FREEWAY
SUITE 625,
HOUSTON, TEXAS 77040

FIRM NUMBER #13619

PROJECT NO: 25MA02	SCALE: NONE
DRAWN BY: GS	CHECKED: APB
DESIGN BY:	ENG APVL: PDN
DRAWING NO: 1100-PID-0013	REV A

DRAWING: 1100-pid-0013.dwg, PLOTTED BY: jason, PLOT DATE: ----, DRAWING LOCATION: c:\users\jason\onedrive - engineer's files - 25ma02 - aromatics utility scope cold eyes review\04 - design\04 - process\pids, (Border Rev1 5.16.25)

X-1113A
AIR SILENCER
RATED CAPACITY :
DESIGN PRESSURE :
DESIGN TEMP :
MOC :
TRIM : VT-1100-086-A021-N
INSULATION :

F-1111A
FORCED DRAFT FAN
RATED CAPACITY :
DIFFERENTIAL PRESSURE :
RATED POWER :
MOC :
TRIM : VT-1100-087-A021-N
INSULATION :

TS-1111A
STEAM TURBINE
RATED POWER :
DESIGN PRESSURE :
DESIGN TEMP :
MOC :
TRIM : VT-1100-086-D021-HX*
INSULATION :

GENERAL NOTES

A. FOR PIPING AND INSTRUMENTATION LEGENDS AND SYMBOLS, SEE P&IDs 0000-PID-0001 THRU 0000-PID-00XX.

B. INSTRUMENT NUMBERS ON THIS P&ID ARE PREFIXED BY THE UNIT NUMBER ASSOCIATED WITH THIS P&ID UNLESS OTHERWISE SPECIFIED.

C. CONTROL VALVES AND BYPASS SIZES ARE PRELIMINARY AND WILL BE CONFIRMED DURING DETAIL DESIGN.

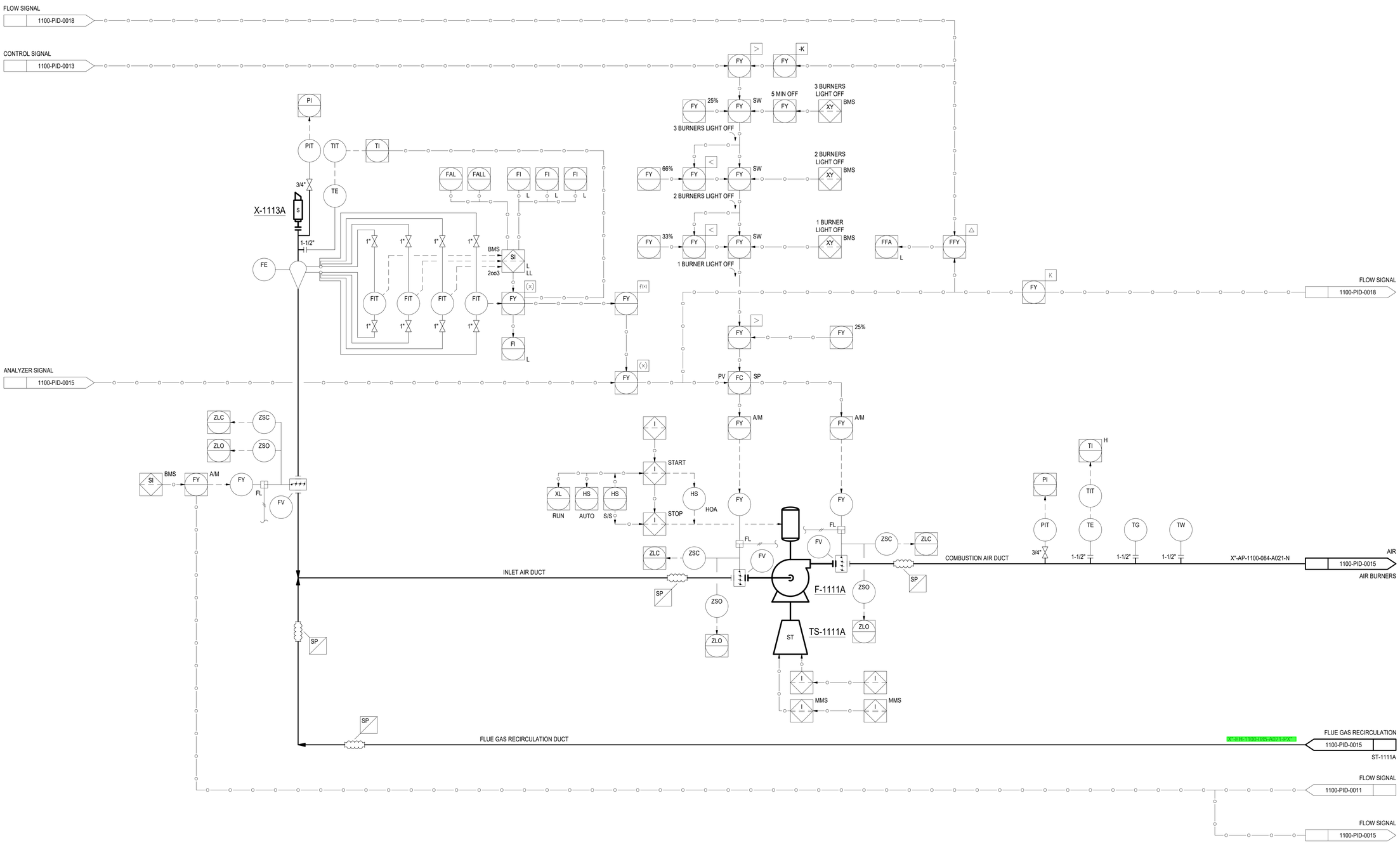

CHECK PRINT

NOT PUBLISHED. ALL RIGHTS RESERVED BY THE ENGINEER. DRAWINGS AND SPECIFICATIONS, AS INSTRUMENTS OF SERVICE, ARE ISSUED TO DESCRIBE DESIGN INTENT. THEY ARE NOT TO BE USED ON OTHER PROJECTS OR EXTENSIONS TO THIS PROJECT, EXCEPT BY AGREEMENT IN WRITING AND WITH APPROPRIATE COMPENSATION TO THE ENGINEER. CONTRACTOR, SUB-CONTRACTORS, & SUPPLIERS ARE RESPONSIBLE FOR CONFIRMING AND CORRELATING DIMENSIONS AND CONDITIONS AT THE JOB SITE, AND SHALL NOTIFY THE ENGINEER IMMEDIATELY OF ANY ERRORS OR DISCREPANCIES IN REGARD TO SUCH. DRAWINGS, DESCRIBING DESIGN INTENT, SHALL NOT INDICATE EVERY DETAIL OR SYSTEM FOR CONSTRUCTION. CONTRACTOR, SUB-CONTRACTORS, AND SUPPLIERS SHALL BE RESPONSIBLE TO PROVIDE ADDITIONAL DRAWINGS AS NECESSARY FOR PERMITS, ERECTION, INSTALLATION, AND CO-ORDINATION OF ALL WORK. CONTRACTOR, SUB-CONTRACTORS, AND SUPPLIERS SHALL BE RESPONSIBLE FOR ALL LABOR AND MATERIALS REQUIRED IN ACCORDANCE WITH DESIGN INTENT. ALL MATERIALS SHALL BE NEW, UNLESS SPECIFIED OTHERWISE, AND SHALL BE INSTALLED LEVEL, PLUMB, STRAIGHT, AND TRUE TO LINE, IN ACCORDANCE WITH THE BEST PRACTICES OF THE TRADES. THE ENGINEER SHALL NOT BE RESPONSIBLE FOR CONSTRUCTION MEANS, METHODS, TECHNIQUES, SEQUENCES OR PROCEDURES, OR FOR SAFETY PRECAUTIONS AND PROGRAMS IN CONNECTION WITH THE WORK. ALL WORK SHALL BE PERFORMED IN ACCORDANCE WITH APPLICABLE CODES AND ORDINANCES.

REFERENCE DRAWINGS:

REV #	DATE	DESCRIPTION	DRWN	CHKD	APVD
A	12-05-25	ISSUED FOR APPROVAL	GS	DLH	PDN

REV #	DATE	DESCRIPTION	DRWN	CHKD	APVD

MOTIVA

CLIENT: MOTIVA ENTERPRISES LLC
PLANT: PORT ARTHUR REFINERY
JOB NO:

PIPING & INSTRUMENTATION DIAGRAM
STEAM UNIT
BOILER A
FORCED DRAFT FAN

PROJ TITLE: AROMATICS UTILITY SCOPE REVIEW

SSP ENGINEERING & CONSULTING
13100 NORTHWEST FREEWAY
SUITE 625,
HOUSTON, TEXAS 77040

FIRM NUMBER #13619

PROJECT NO: 25MA02	SCALE: NONE
DRAWN BY: GS	CHECKED: APB
DESIGN BY:	ENG APVL: PDN
DRAWING NO: 1100-PID-0014	REV A

DRAWING: 1100-pid-0014.dwg, PLOTTED BY: jason, PLOT DATE: ----, DRAWING LOCATION: c:\users\jason\onedrive - engineer's files - 25ma02 - aromatics utility scope cold eyes review\04 - design\04 - process\pids, (Border Rev1 5.16.25)

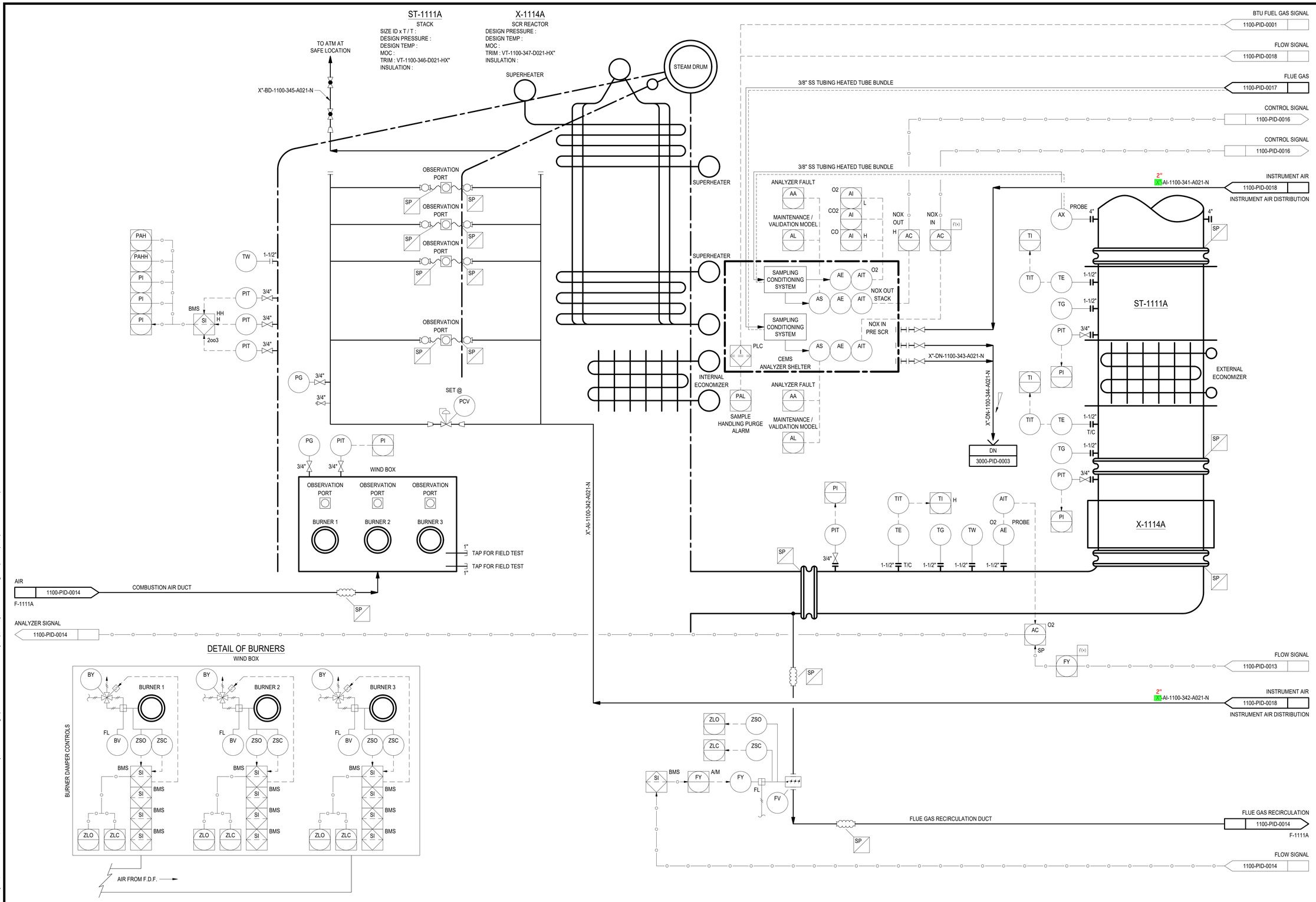

GENERAL NOTES

A. FOR PIPING AND INSTRUMENTATION LEGENDS AND SYMBOLS, SEE P&IDs 0000-PID-0001 THRU 0000-PID-00XX.

B. INSTRUMENT NUMBERS ON THIS P&ID ARE PREFIXED BY THE UNIT NUMBER ASSOCIATED WITH THIS P&ID UNLESS OTHERWISE SPECIFIED.

C. CONTROL VALVES AND BYPASS SIZES ARE PRELIMINARY AND WILL BE CONFIRMED DURING DETAIL DESIGN.

NOTES

1. BOILER CONFIGURATION IS TYPICAL. DRAWING WILL BE MODIFIED ONCE BOILER IS SELECTED.

CHECK PRINT

NOT PUBLISHED. ALL RIGHTS RESERVED BY THE ENGINEER. DRAWINGS AND SPECIFICATIONS, AS INSTRUMENTS OF SERVICE, ARE ISSUED TO DESCRIBE DESIGN INTENT. THEY ARE NOT TO BE USED ON OTHER PROJECTS OR EXTENSIONS TO THIS PROJECT, EXCEPT BY AGREEMENT IN WRITING AND WITH APPROPRIATE COMPENSATION TO THE ENGINEER. CONTRACTOR, SUB-CONTRACTORS, & SUPPLIERS ARE RESPONSIBLE FOR CONFIRMING AND CORRELATING DIMENSIONS AND CONDITIONS AT THE JOB SITE, AND SHALL NOTIFY THE ENGINEER IMMEDIATELY OF ANY ERRORS OR DISCREPANCIES IN REGARD TO SUCH DRAWINGS. DESCRIBING DESIGN INTENT, SHALL NOT INDICATE EVERY DETAIL OR SYSTEM FOR CONSTRUCTION. CONTRACTOR, SUB-CONTRACTORS, AND SUPPLIERS SHALL BE RESPONSIBLE TO PROVIDE ADDITIONAL DRAWINGS AS NECESSARY FOR PERMITS, ERECTION, INSTALLATION, AND CO-ORDINATION OF ALL WORK. CONTRACTOR, SUB-CONTRACTORS, AND SUPPLIERS SHALL BE RESPONSIBLE FOR ALL LABOR AND MATERIALS REQUIRED IN ACCORDANCE WITH DESIGN INTENT. ALL MATERIALS SHALL BE NEW, UNLESS SPECIFIED OTHERWISE, AND SHALL BE INSTALLED LEVEL, PLUMB, STRAIGHT, AND TRUE TO LINE, IN ACCORDANCE WITH THE BEST PRACTICES OF THE TRADES. THE ENGINEER SHALL NOT BE RESPONSIBLE FOR CONSTRUCTION MEANS, METHODS, TECHNIQUES, SEQUENCES OR PROCEDURES, OR FOR SAFETY PRECAUTIONS AND PROGRAMS IN CONNECTION WITH THE WORK. ALL WORK SHALL BE PERFORMED IN ACCORDANCE WITH APPLICABLE CODES AND ORDINANCES.

REFERENCE DRAWINGS:

REV #	DATE	DESCRIPTION	DRWN	CHKD	APVD
A	12-05-25	ISSUED FOR APPROVAL	GS	DLH	PDN

REV #	DATE	DESCRIPTION	DRWN	CHKD	APVD

MOTIVA

CLIENT: MOTIVA ENTERPRISES LLC
PLANT: PORT ARTHUR REFINERY
JOB NO:

PIPING & INSTRUMENTATION DIAGRAM

STEAM UNIT
BOILER A
STACK

PROJ TITLE: AROMATICS UTILITY SCOPE REVIEW

SSP ENGINEERING & CONSULTING
13100 NORTHWEST FREEWAY
SUITE 625,
HOUSTON, TEXAS 77040

FIRM NUMBER #13619

PROJECT NO: 25MA02	SCALE: NONE
DRAWN BY: GS	CHECKED: APB
DESIGN BY:	ENG APVL: PDN
DRAWING NO: 1100-PID-0015	REV A

DRAWING : 1100-pid-0015.dwg, PLOTTED BY: jason, PLOT DATE: ---- DRAWING LOCATION: c:\users\jason\onedrive - engineap's files - 25ma02 - aromatics utility scope cold eyes review\04 - design\04 - process\pids, (Border Rev1 5.16.25)

F-1112AA/AB
DILUTION AIR FAN
RATED CAPACITY :
DIFFERENTIAL PRESSURE :
RATED POWER :
MOC :
TRIM : VT-1100-091-A130-N
INSULATION :

HE-1116AA/AB
HEATER
RATED DUTY :
SURFACE AREA :
DESIGN PRESSURE :
DESIGN TEMP :
MOC :
TRIM : VT-1100-092-A130-N
INSULATION :

M-1115A
MIXER
RATED CAPACITY :
DESIGN PRESSURE :
DESIGN TEMP :
MOC :
TRIM : VT-1100-093-A130-N
INSULATION :

GENERAL NOTES

A. FOR PIPING AND INSTRUMENTATION LEGENDS AND SYMBOLS, SEE P&IDs 0000-PID-0001 THRU 0000-PID-00XX.

B. INSTRUMENT NUMBERS ON THIS P&ID ARE PREFIXED BY THE UNIT NUMBER ASSOCIATED WITH THIS P&ID UNLESS OTHERWISE SPECIFIED.

C. CONTROL VALVES AND BYPASS SIZES ARE PRELIMINARY AND WILL BE CONFIRMED DURING DETAIL DESIGN.

NOTES

1. BOILER CONFIGURATION IS TYPICAL. DRAWING WILL BE MODIFIED ONCE BOILER IS SELECTED.

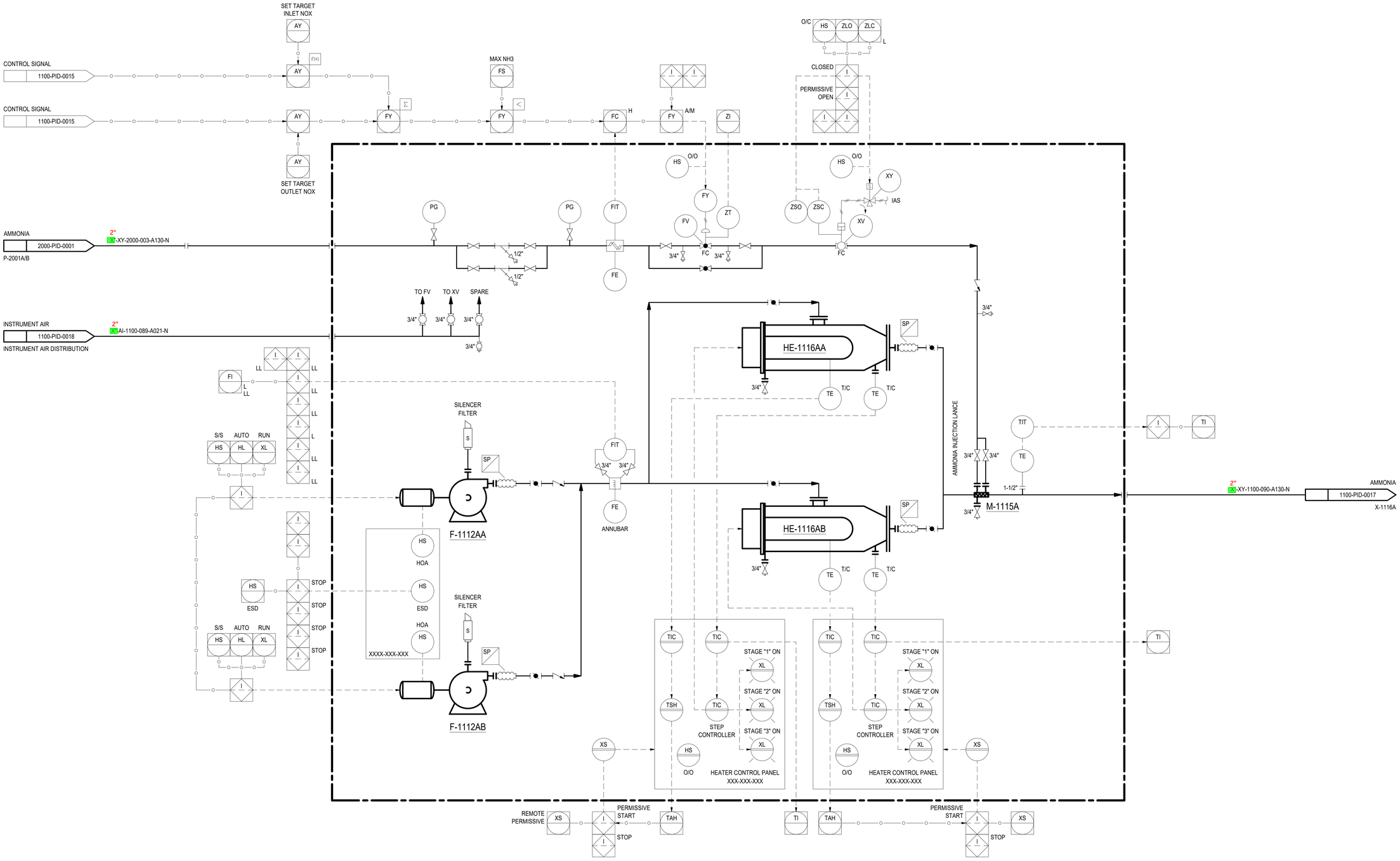

CHECK PRINT

NOT PUBLISHED. ALL RIGHTS RESERVED BY THE ENGINEER. DRAWINGS AND SPECIFICATIONS, AS INSTRUMENTS OF SERVICE, ARE ISSUED TO DESCRIBE DESIGN INTENT. THEY ARE NOT TO BE USED ON OTHER PROJECTS OR EXTENSIONS TO THIS PROJECT, EXCEPT BY AGREEMENT IN WRITING AND WITH APPROPRIATE COMPENSATION TO THE ENGINEER. CONTRACTOR, SUB-CONTRACTORS, & SUPPLIERS ARE RESPONSIBLE FOR CONFIRMING AND CORRELATING DIMENSIONS AND CONDITIONS AT THE JOB SITE, AND SHALL NOTIFY THE ENGINEER IMMEDIATELY OF ANY ERRORS OR DISCREPANCIES IN REGARD TO SUCH DRAWINGS. DESCRIBING DESIGN INTENT, SHALL NOT INDICATE EVERY DETAIL OR SYSTEM FOR CONSTRUCTION. CONTRACTOR, SUB-CONTRACTORS, AND SUPPLIERS SHALL BE RESPONSIBLE TO PROVIDE ADDITIONAL DRAWINGS AS NECESSARY FOR PERMITS, ERECTION, INSTALLATION, AND CO-ORDINATION OF ALL WORK. CONTRACTOR, SUB-CONTRACTORS, AND SUPPLIERS SHALL BE RESPONSIBLE FOR ALL LABOR AND MATERIALS REQUIRED IN ACCORDANCE WITH DESIGN INTENT. ALL MATERIALS SHALL BE NEW, UNLESS SPECIFIED OTHERWISE, AND SHALL BE INSTALLED LEVEL, PLUMB, STRAIGHT, AND TRUE TO LINE, IN ACCORDANCE WITH THE BEST PRACTICES OF THE TRADES. THE ENGINEER SHALL NOT BE RESPONSIBLE FOR CONSTRUCTION MEANS, METHODS, TECHNIQUES, SEQUENCES OR PROCEDURES, OR FOR SAFETY PRECAUTIONS AND PROGRAMS IN CONNECTION WITH THE WORK. ALL WORK SHALL BE PERFORMED IN ACCORDANCE WITH APPLICABLE CODES AND ORDINANCES.

REFERENCE DRAWINGS:

REV #	DATE	DESCRIPTION	DRWN	CHKD	APVD
A	12-05-25	ISSUED FOR APPROVAL	GS	DLH	PDN

REV #	DATE	DESCRIPTION	DRWN	CHKD	APVD

MOTIVA

CLIENT: MOTIVA ENTERPRISES LLC
PLANT: PORT ARTHUR REFINERY
JOB NO:

PIPING & INSTRUMENTATION DIAGRAM
STEAM UNIT
BOILER A
AFCU

PROJ TITLE: AROMATICS UTILITY SCOPE REVIEW

SSP ENGINEERING & CONSULTING
13100 NORTHWEST FREEWAY
SUITE 625,
HOUSTON, TEXAS 77040

FIRM NUMBER #13619

PROJECT NO: 25MA02	SCALE: NONE
DRAWN BY: GS	CHECKED: APB
DESIGN BY:	ENG APVL: PDN
DRAWING NO: 1100-PID-0016	REV A

DRAWING: 1100-pid-0016.dwg, PLOTTED BY: jason, PLOT DATE: ----, DRAWING LOCATION: c:\users\jason\onedrive - engineering's files - 25ma02 - aromatics utility scope cold eyes review\04 - design\04 - process\pids, (Border Rev1 5.16.25)

X-1116A
SCR REACTOR
DESIGN PRESSURE :
DESIGN TEMP :
MOC :
TRIM : VT-1100-094-A130-N
INSULATION :

GENERAL NOTES

A. FOR PIPING AND INSTRUMENTATION LEGENDS AND SYMBOLS, SEE P&IDs 0000-PID-0001 THRU 0000-PID-00XX.

B. INSTRUMENT NUMBERS ON THIS P&ID ARE PREFIXED BY THE UNIT NUMBER ASSOCIATED WITH THIS P&ID UNLESS OTHERWISE SPECIFIED.

C. CONTROL VALVES AND BYPASS SIZES ARE PRELIMINARY AND WILL BE CONFIRMED DURING DETAIL DESIGN.

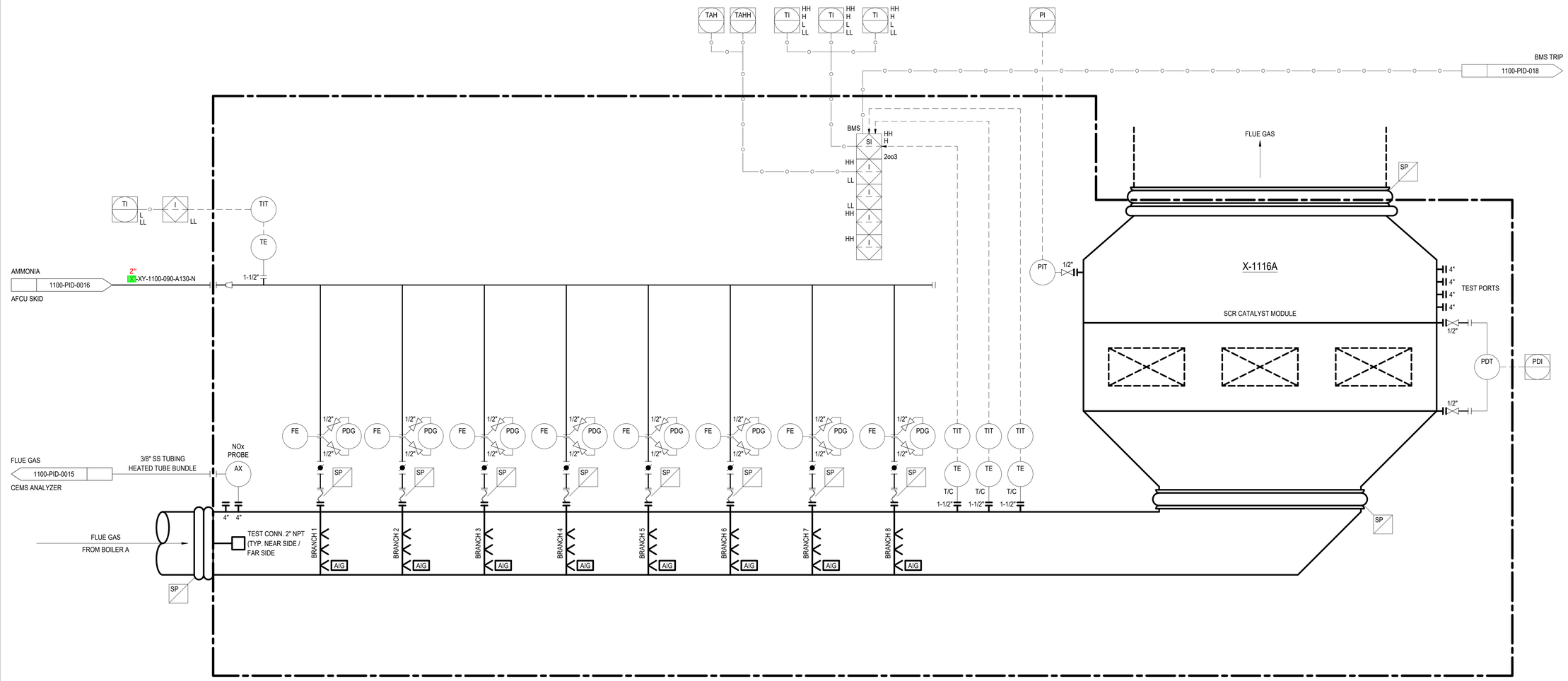

CHECK PRINT

NOT PUBLISHED. ALL RIGHTS RESERVED BY THE ENGINEER. DRAWINGS AND SPECIFICATIONS, AS INSTRUMENTS OF SERVICE, ARE ISSUED TO DESCRIBE DESIGN INTENT. THEY ARE NOT TO BE USED ON OTHER PROJECTS OR EXTENSIONS TO THIS PROJECT, EXCEPT BY AGREEMENT IN WRITING AND WITH APPROPRIATE COMPENSATION TO THE ENGINEER. CONTRACTOR, SUB-CONTRACTORS, & SUPPLIERS ARE RESPONSIBLE FOR CONFIRMING AND CORRELATING DIMENSIONS AND CONDITIONS AT THE JOB SITE, AND SHALL NOTIFY THE ENGINEER IMMEDIATELY OF ANY ERRORS OR DISCREPANCIES IN REGARD TO SUCH. DRAWINGS, DESCRIBING DESIGN INTENT, SHALL NOT INDICATE EVERY DETAIL OR SYSTEM FOR CONSTRUCTION. CONTRACTOR, SUB-CONTRACTORS, AND SUPPLIERS SHALL BE RESPONSIBLE TO PROVIDE ADDITIONAL DRAWINGS AS NECESSARY FOR PERMITS, ERECTION, INSTALLATION, AND CO-ORDINATION OF ALL WORK. CONTRACTOR, SUB-CONTRACTORS, AND SUPPLIERS SHALL BE RESPONSIBLE FOR ALL LABOR AND MATERIALS REQUIRED IN ACCORDANCE WITH DESIGN INTENT. ALL MATERIALS SHALL BE NEW. UNLESS SPECIFIED OTHERWISE, AND SHALL BE INSTALLED LEVEL, PLUMB, STRAIGHT, AND TRUE TO LINE, IN ACCORDANCE WITH THE BEST PRACTICES OF THE TRADES. THE ENGINEER SHALL NOT BE RESPONSIBLE FOR CONSTRUCTION MEANS, METHODS, TECHNIQUES, SEQUENCES OR PROCEDURES, OR FOR SAFETY PRECAUTIONS AND PROGRAMS IN CONNECTION WITH THE WORK. ALL WORK SHALL BE PERFORMED IN ACCORDANCE WITH APPLICABLE CODES AND ORDINANCES.

REFERENCE DRAWINGS:

REV #	DATE	DESCRIPTION	DRWN	CHKD	APVD
A	12-05-25	ISSUED FOR APPROVAL	GS	DLH	PDN

REV #	DATE	DESCRIPTION	DRWN	CHKD	APVD

MOTIVA

CLIENT: MOTIVA ENTERPRISES LLC
PLANT: PORT ARTHUR REFINERY
JOB NO:

PIPING & INSTRUMENTATION DIAGRAM
STEAM UNIT
BOILER A
SCR

PROJ TITLE: AROMATICS UTILITY SCOPE REVIEW

SSP ENGINEERING & CONSULTING
13100 NORTHWEST FREEWAY
SUITE 625,
HOUSTON, TEXAS 77040

FIRM NUMBER #13619

PROJECT NO: 25MA02	SCALE: NONE
DRAWN BY: GS	CHECKED: APB
DESIGN BY:	ENG APVL: PDN
DRAWING NO: 1100-PID-0017	REV A

DRAWING: 1100-pid-0017.dwg, PLOTTED BY: jason, PLOT DATE: ----, DRAWING LOCATION: c:\users\jason\onedrive - engineer's files - 25ma02 - aromatics utility scope cold eyes review\04 - design\04 - process\pids, (Border Rev1 5.16.25)

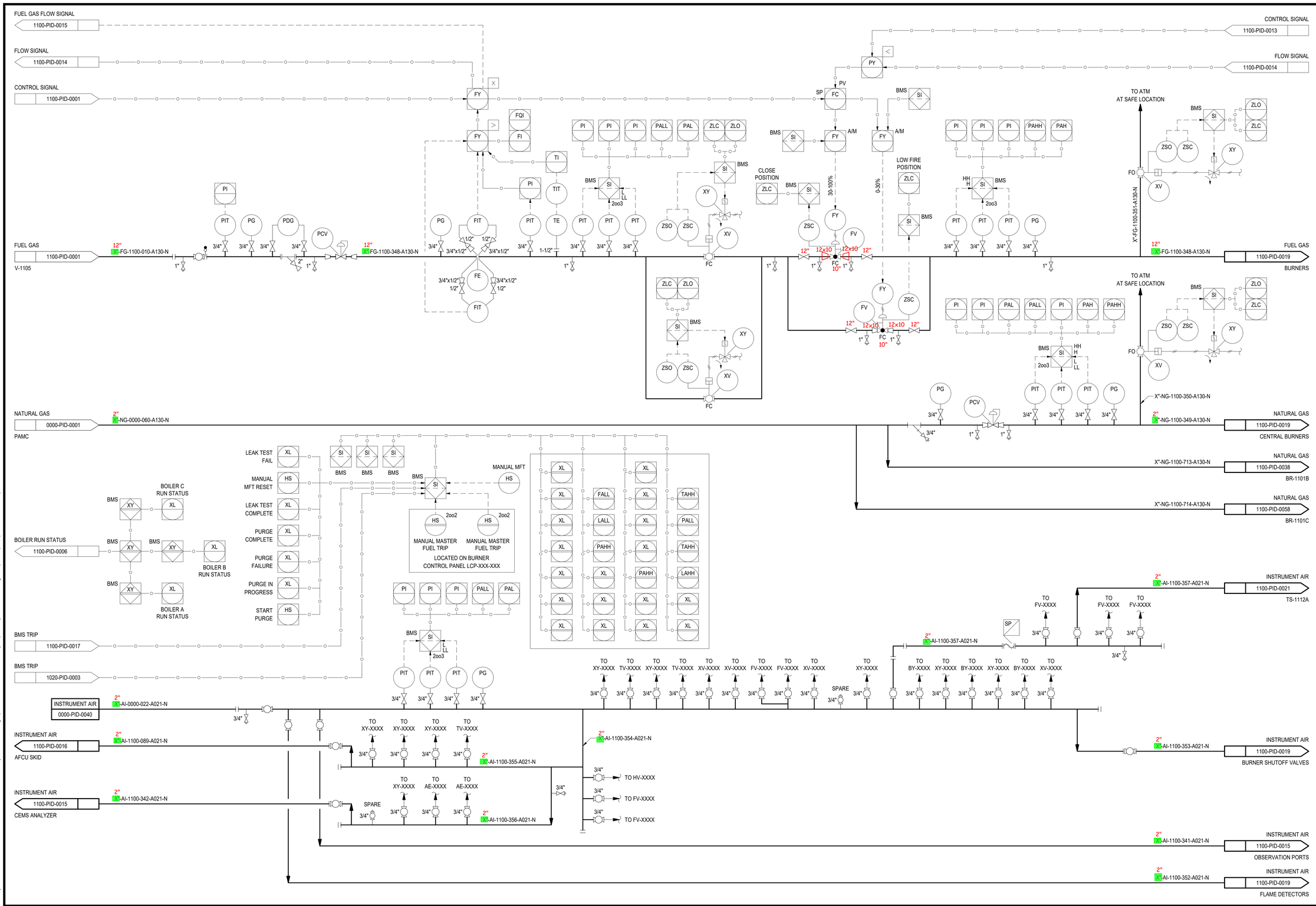

GENERAL NOTES

A. FOR PIPING AND INSTRUMENTATION LEGENDS AND SYMBOLS, SEE P&IDs 0000-PID-0001 THRU 0000-PID-00XX.

B. INSTRUMENT NUMBERS ON THIS P&ID ARE PREFIXED BY THE UNIT NUMBER ASSOCIATED WITH THIS P&ID UNLESS OTHERWISE SPECIFIED.

C. CONTROL VALVES AND BYPASS SIZES ARE PRELIMINARY AND WILL BE CONFIRMED DURING DETAIL DESIGN.

NOTES

1. BOILER CONFIGURATION IS TYPICAL. DRAWING WILL BE MODIFIED ONCE BOILER IS SELECTED.

CHECK PRINT

NOT PUBLISHED. ALL RIGHTS RESERVED BY THE ENGINEER. DRAWINGS AND SPECIFICATIONS, AS INSTRUMENTS OF SERVICE, ARE ISSUED TO DESCRIBE DESIGN INTENT. THEY ARE NOT TO BE USED ON OTHER PROJECTS OR EXTENSIONS TO THIS PROJECT, EXCEPT BY AGREEMENT IN WRITING AND WITH APPROPRIATE COMPENSATION TO THE ENGINEER. CONTRACTOR, SUB-CONTRACTORS, & SUPPLIERS ARE RESPONSIBLE FOR CONFIRMING AND CORRELATING DIMENSIONS AND CONDITIONS AT THE JOB SITE, AND SHALL NOTIFY THE ENGINEER IMMEDIATELY OF ANY ERRORS OR DISCREPANCIES IN REGARD TO SUCH DRAWINGS. DESCRIBING DESIGN INTENT, SHALL NOT INDICATE EVERY DETAIL OR SYSTEM FOR CONSTRUCTION. CONTRACTOR, SUB-CONTRACTORS, AND SUPPLIERS SHALL BE RESPONSIBLE TO PROVIDE ADDITIONAL DRAWINGS AS NECESSARY FOR PERMITS, ERECTION, INSTALLATION, AND CO-ORDINATION OF ALL WORK. CONTRACTOR, SUB-CONTRACTORS, AND SUPPLIERS SHALL BE RESPONSIBLE FOR ALL LABOR AND MATERIALS REQUIRED IN ACCORDANCE WITH DESIGN INTENT. ALL MATERIALS SHALL BE NEW, UNLESS SPECIFIED OTHERWISE, AND SHALL BE INSTALLED LEVEL, PLUMB, STRAIGHT, AND TRUE TO LINE, IN ACCORDANCE WITH THE BEST PRACTICES OF THE TRADES. THE ENGINEER SHALL NOT BE RESPONSIBLE FOR CONSTRUCTION MEANS, METHODS, TECHNIQUES, SEQUENCES OR PROCEDURES, OR FOR SAFETY PRECAUTIONS AND PROGRAMS IN CONNECTION WITH THE WORK. ALL WORK SHALL BE PERFORMED IN ACCORDANCE WITH APPLICABLE CODES AND ORDINANCES.

REFERENCE DRAWINGS:

REV #	DATE	DESCRIPTION	DRWN	CHKD	APVD
A	12-05-25	ISSUED FOR APPROVAL	GS	DLH	PDN

REV #	DATE	DESCRIPTION	DRWN	CHKD	APVD

MOTIVA

CLIENT: MOTIVA ENTERPRISES LLC
PLANT: PORT ARTHUR REFINERY
JOB NO:

PIPING & INSTRUMENTATION DIAGRAM

STEAM UNIT
BOILER A
FUEL GAS AND INSTRUMENT HEADERS

PROJ TITLE: AROMATICS UTILITY SCOPE REVIEW

SSP ENGINEERING & CONSULTING
13100 NORTHWEST FREEWAY
SUITE 625,
HOUSTON, TEXAS 77040

FIRM NUMBER #13619

PROJECT NO: 25MA02	SCALE: NONE
DRAWN BY: GS	CHECKED: APB
DESIGN BY:	ENG APVL: PDN
DRAWING NO: 1100-PID-0018	REV A

DRAWING: 1100-pid-0018.dwg, PLOTTED BY: jason, PLOT DATE: ----, DRAWING LOCATION: c:\users\jason\onedrive - engineap's files - 25ma02 - aromatics utility scope cold eyes review\04 - design\04 - process\pids, (Border Rev1 5.16.25)

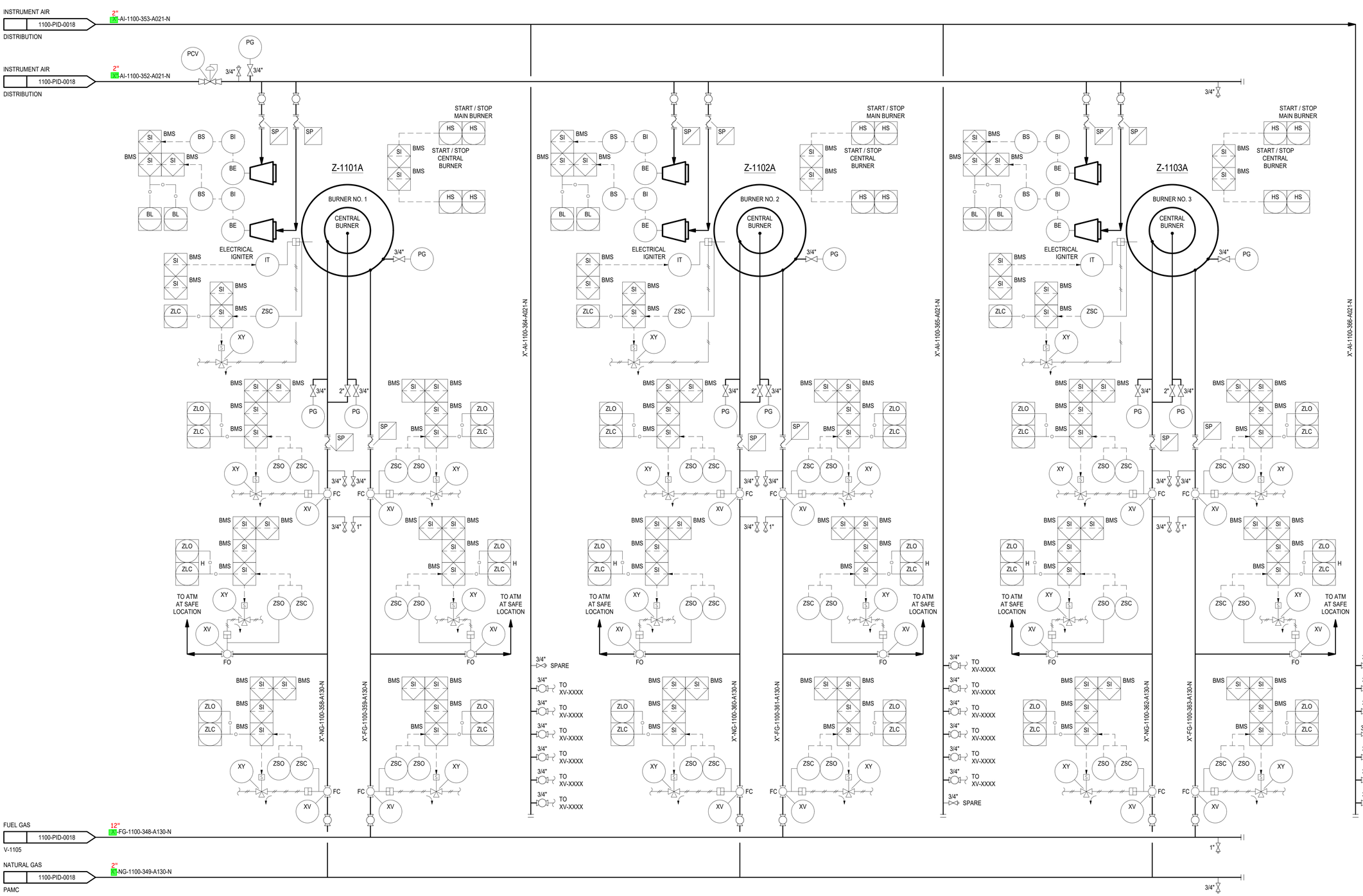

GENERAL NOTES

A. FOR PIPING AND INSTRUMENTATION LEGENDS AND SYMBOLS, SEE P&IDs 0000-PID-0001 THRU 0000-PID-00XX.

B. INSTRUMENT NUMBERS ON THIS P&ID ARE PREFIXED BY THE UNIT NUMBER ASSOCIATED WITH THIS P&ID UNLESS OTHERWISE SPECIFIED.

C. CONTROL VALVES AND BYPASS SIZES ARE PRELIMINARY AND WILL BE CONFIRMED DURING DETAIL DESIGN.

NOTES

1. BOILER CONFIGURATION IS TYPICAL. DRAWING WILL BE MODIFIED ONCE BOILER IS SELECTED.

CHECK PRINT

NOT PUBLISHED. ALL RIGHTS RESERVED BY THE ENGINEER. DRAWINGS AND SPECIFICATIONS, AS INSTRUMENTS OF SERVICE, ARE ISSUED TO DESCRIBE DESIGN INTENT. THEY ARE NOT TO BE USED ON OTHER PROJECTS OR EXTENSIONS TO THIS PROJECT, EXCEPT BY AGREEMENT IN WRITING AND WITH APPROPRIATE COMPENSATION TO THE ENGINEER. CONTRACTOR, SUB-CONTRACTORS, & SUPPLIERS ARE RESPONSIBLE FOR CONFIRMING AND CORRELATING DIMENSIONS AND CONDITIONS AT THE JOB SITE, AND SHALL NOTIFY THE ENGINEER IMMEDIATELY OF ANY ERRORS OR DISCREPANCIES IN REGARD TO SUCH DRAWINGS, DESCRIBING DESIGN INTENT, SHALL NOT INDICATE EVERY DETAIL OR SYSTEM FOR CONSTRUCTION. CONTRACTOR, SUB-CONTRACTORS, AND SUPPLIERS SHALL BE RESPONSIBLE TO PROVIDE ADDITIONAL DRAWINGS AS NECESSARY FOR PERMITS, ERECTION, INSTALLATION, AND CO-ORDINATION OF ALL WORK. CONTRACTOR, SUB-CONTRACTORS, AND SUPPLIERS SHALL BE RESPONSIBLE FOR ALL LABOR AND MATERIALS REQUIRED IN ACCORDANCE WITH DESIGN INTENT. ALL MATERIALS SHALL BE NEW, UNLESS SPECIFIED OTHERWISE, AND SHALL BE INSTALLED LEVEL, PLUMB, STRAIGHT, AND TRUE TO LINE, IN ACCORDANCE WITH THE BEST PRACTICES OF THE TRADES. THE ENGINEER SHALL NOT BE RESPONSIBLE FOR CONSTRUCTION MEANS, METHODS, TECHNIQUES, SEQUENCES OR PROCEDURES, OR FOR SAFETY PRECAUTIONS AND PROGRAMS IN CONNECTION WITH THE WORK. ALL WORK SHALL BE PERFORMED IN ACCORDANCE WITH APPLICABLE CODES AND ORDINANCES.

REFERENCE DRAWINGS:

REV #	DATE	DESCRIPTION	DRWN	CHKD	APVD
A	12-05-25	ISSUED FOR APPROVAL	GS	DLH	PDN

REV #	DATE	DESCRIPTION	DRWN	CHKD	APVD

MOTIVA

CLIENT: MOTIVA ENTERPRISES LLC
PLANT: PORT ARTHUR REFINERY
JOB NO:

PIPING & INSTRUMENTATION DIAGRAM

STEAM UNIT
BOILER A BURNERS

PROJ TITLE: AROMATICS UTILITY SCOPE REVIEW

SSP ENGINEERING & CONSULTING
13100 NORTHWEST FREEWAY
SUITE 625,
HOUSTON, TEXAS 77040

FIRM NUMBER #13619

PROJECT NO: 25MA02	SCALE: NONE
DRAWN BY: GS	CHECKED: APB
DESIGN BY:	ENG APVL: PDN
DRAWING NO: 1100-PID-0019	REV A

DRAWING: 1100-pid-0019.dwg PLOTTED BY: jason. PLOT DATE: ---- DRAWING LOCATION: c:\users\jason\onedrive - engineer's files - 25ma02 - aromatics utility scope cold eyes review\04 - design\04 - process\pids. (Border Rev1 5.16.25)

HE-1117A
ELECTRIC OIL HEATER
TYPE :
RATED DUTY :
SURFACE AREA :
DESIGN PRESS @ TEMP :
MOC :
TRIM : VT-1100-376-A021-N
INSULATION :

P-1111A
AUXILIARY LUBE OIL PUMP
RATED CAPACITY :
DIFFERENTIAL PRESSURE :
RATED POWER :
MOC (CASING / INTERNAL) :
INSULATION / TRACING :
TRIM : VT-1100-377-A021-N
SEAL PLAN :

HE-1118A
LUBE OIL COOLER
TYPE :
RATED DUTY :
SURFACE AREA :
SHELL DESIGN PRESS @ TEMP :
TUBE DESIGN PRESS @ TEMP :
MOC (SHELL / TUBES) :
TRIM (SHELL / TUBES) : VT-1100-378-A021-N
INSULATION (SHELL / TUBES) :

V-1112A
OIL RESERVOIR
SIZE :
DESIGN PRESSURE :
DESIGN TEMP :
MOC :
TRIM : VT-1100-379-A021-N
INSULATION :

FIL-1118AA/AB
LUBE OIL FILTERS
RATED CAPACITY :
DESIGN PRESSURE :
DESIGN TEMP :
MOC :
TRIM : VT-1100-380-A021-N
INSULATION :

GENERAL NOTES

A. FOR PIPING AND INSTRUMENTATION LEGENDS AND SYMBOLS, SEE P&IDs 0000-PID-0001 THRU 0000-PID-00XX.

B. INSTRUMENT NUMBERS ON THIS P&ID ARE PREFIXED BY THE UNIT NUMBER ASSOCIATED WITH THIS P&ID UNLESS OTHERWISE SPECIFIED.

C. CONTROL VALVES AND BYPASS SIZES ARE PRELIMINARY AND WILL BE CONFIRMED DURING DETAIL DESIGN.

NOTES

1. BOILER CONFIGURATION IS TYPICAL. DRAWING WILL BE MODIFIED ONCE BOILER IS SELECTED.

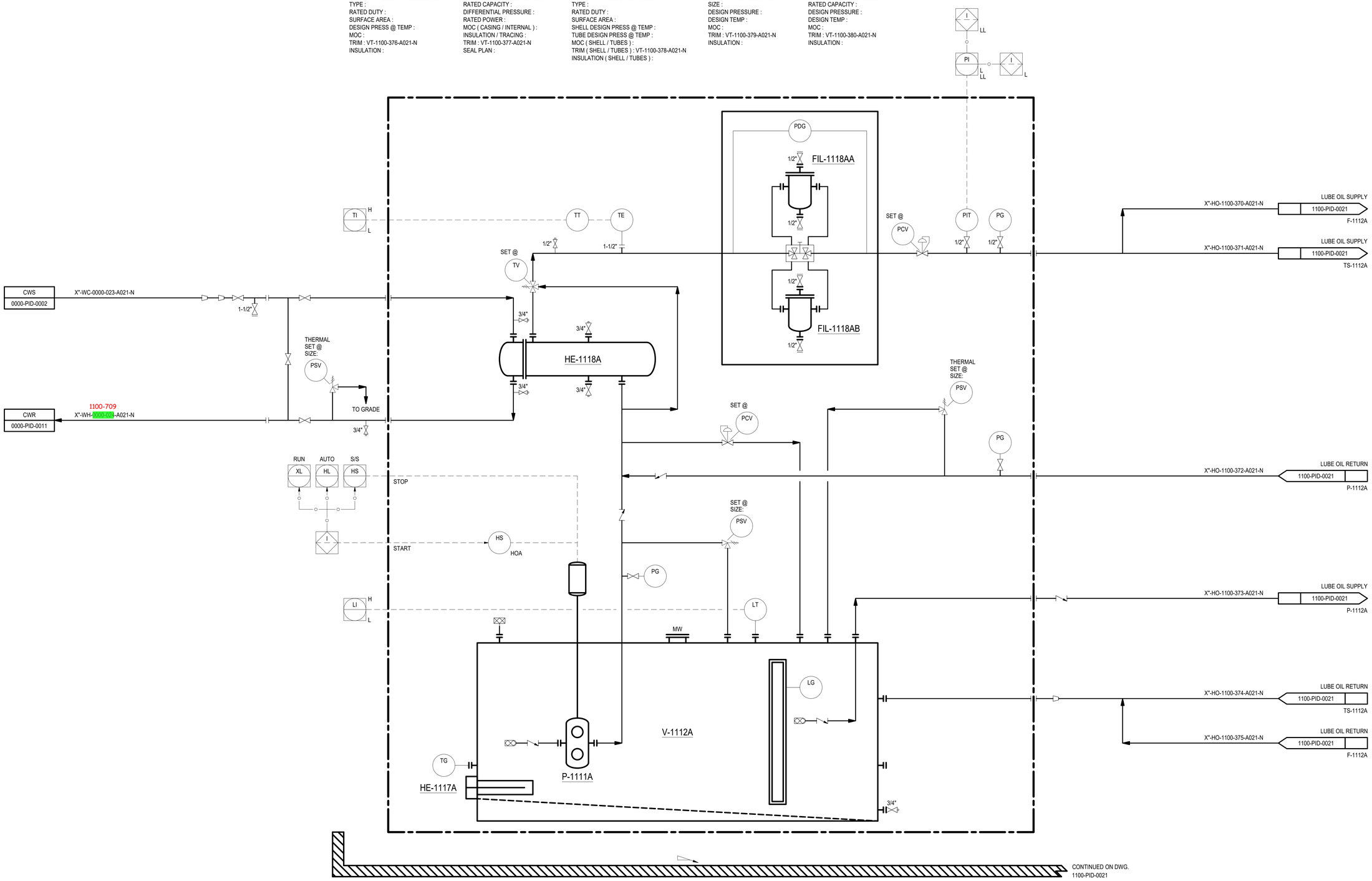

CHECK PRINT

NOT PUBLISHED. ALL RIGHTS RESERVED BY THE ENGINEER. DRAWINGS AND SPECIFICATIONS, AS INSTRUMENTS OF SERVICE, ARE ISSUED TO DESCRIBE DESIGN INTENT. THEY ARE NOT TO BE USED ON OTHER PROJECTS OR EXTENSIONS TO THIS PROJECT, EXCEPT BY AGREEMENT IN WRITING AND WITH APPROPRIATE COMPENSATION TO THE ENGINEER. CONTRACTOR, SUB-CONTRACTORS, & SUPPLIERS ARE RESPONSIBLE FOR CONFIRMING AND CORRELATING DIMENSIONS AND CONDITIONS AT THE JOB SITE, AND SHALL NOTIFY THE ENGINEER IMMEDIATELY OF ANY ERRORS OR DISCREPANCIES IN REGARD TO SUCH DRAWINGS. DESCRIBING DESIGN INTENT, SHALL NOT INDICATE EVERY DETAIL OR SYSTEM FOR CONSTRUCTION. CONTRACTOR, SUB-CONTRACTORS, AND SUPPLIERS SHALL BE RESPONSIBLE TO PROVIDE ADDITIONAL DRAWINGS AS NECESSARY FOR PERMITS, ERECTION, INSTALLATION, AND CO-ORDINATION OF ALL WORK. CONTRACTOR, SUB-CONTRACTORS, AND SUPPLIERS SHALL BE RESPONSIBLE FOR ALL LABOR AND MATERIALS REQUIRED IN ACCORDANCE WITH DESIGN INTENT. ALL MATERIALS SHALL BE NEW, UNLESS SPECIFIED OTHERWISE, AND SHALL BE INSTALLED LEVEL, PLUMB, STRAIGHT, AND TRUE TO LINE, IN ACCORDANCE WITH THE BEST PRACTICES OF THE TRADES. THE ENGINEER SHALL NOT BE RESPONSIBLE FOR CONSTRUCTION MEANS, METHODS, TECHNIQUES, SEQUENCES OR PROCEDURES, OR FOR SAFETY PRECAUTIONS AND PROGRAMS IN CONNECTION WITH THE WORK. ALL WORK SHALL BE PERFORMED IN ACCORDANCE WITH APPLICABLE CODES AND ORDINANCES.

REFERENCE DRAWINGS:

REV #	DATE	DESCRIPTION	DRWN	CHKD	APVD
A	12-05-25	ISSUED FOR APPROVAL	GS	DLH	PDN

REV #	DATE	DESCRIPTION	DRWN	CHKD	APVD

MOTIVA

CLIENT: MOTIVA ENTERPRISES LLC
PLANT: PORT ARTHUR REFINERY
JOB NO:

PIPING & INSTRUMENTATION DIAGRAM

STEAM UNIT
BOILER A
FD FAN LUBE OIL SYSTEM

PROJ TITLE: AROMATICS UTILITY SCOPE REVIEW

SSP ENGINEERING & CONSULTING
13100 NORTHWEST FREEWAY
SUITE 625,
HOUSTON, TEXAS 77040

FIRM NUMBER #13619

PROJECT NO: 25MA02	SCALE: NONE
DRAWN BY: GS	CHECKED: APB
DESIGN BY:	ENG APVL: PDN
DRAWING NO: 1100-PID-0020	REV A

DRAWING: 1100-pid-0020.dwg PLOTTED BY: jason PLOT DATE: ---- DRAWING LOCATION: c:\users\jasonr\onedrive - engineer's files - 25ma02 - aromatics utility scope cold eyes review\04 - design\04 - process\pids (Border Rev1 5.16.25)

TS-1112A
STEAM TURBINE
RATED POWER :
DESIGN PRESSURE :
DESIGN TEMP :
MOC :
TRIM : VT-1100-706-D021-HX"
INSULATION :

P-1112A
MAIN LUBE OIL PUMP
RATED CAPACITY :
DIFFERENTIAL PRESSURE :
RATED POWER :
MOC (CASING / INTERNAL) :
INSULATION / TRACING :
TRIM : VT-1100-707-A021-HX"
SEAL PLAN :

F-1112A
FORCED DRAFT FAN
RATED CAPACITY :
DIFFERENTIAL PRESSURE :
RATED POWER :
MOC (CASING / INTERNAL) :
INSULATION / TRACING :
TRIM : VT-1100-708-A021-N
SEAL PLAN :

GENERAL NOTES

A. FOR PIPING AND INSTRUMENTATION LEGENDS AND SYMBOLS, SEE P&IDs 0000-PID-0001 THRU 0000-PID-00XX.

B. INSTRUMENT NUMBERS ON THIS P&ID ARE PREFIXED BY THE UNIT NUMBER ASSOCIATED WITH THIS P&ID UNLESS OTHERWISE SPECIFIED.

C. CONTROL VALVES AND BYPASS SIZES ARE PRELIMINARY AND WILL BE CONFIRMED DURING DETAIL DESIGN.

NOTES

1. BOILER CONFIGURATION IS TYPICAL. DRAWING WILL BE MODIFIED ONCE BOILER IS SELECTED.

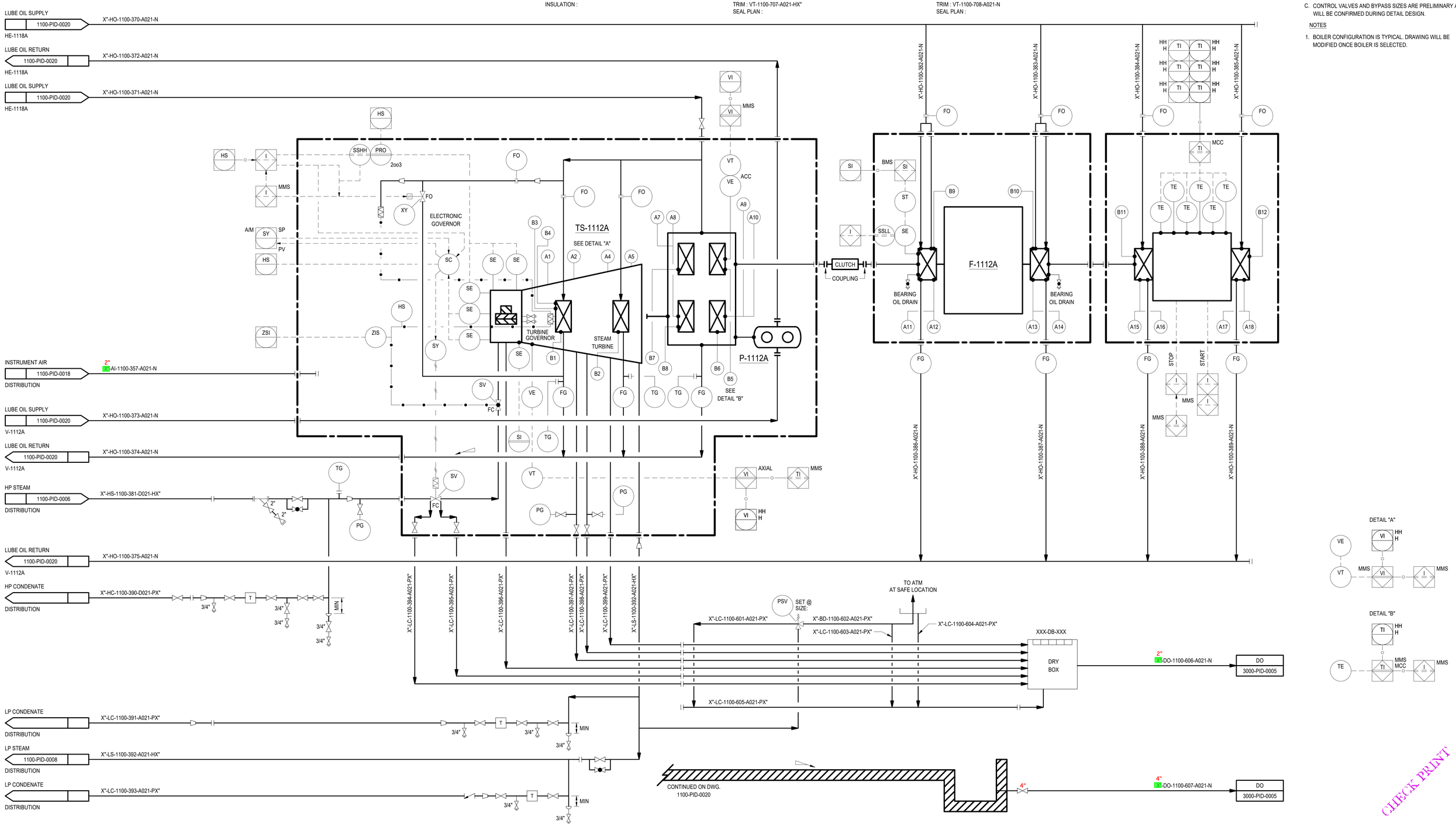

NOT PUBLISHED. ALL RIGHTS RESERVED BY THE ENGINEER. DRAWINGS AND SPECIFICATIONS, AS INSTRUMENTS OF SERVICE, ARE ISSUED TO DESCRIBE DESIGN INTENT. THEY ARE NOT TO BE USED ON OTHER PROJECTS OR EXTENSIONS TO THIS PROJECT, EXCEPT BY AGREEMENT IN WRITING AND WITH APPROPRIATE COMPENSATION TO THE ENGINEER. CONTRACTOR, SUB-CONTRACTORS, & SUPPLIERS ARE RESPONSIBLE FOR CONFIRMING AND CORRELATING DIMENSIONS AND CONDITIONS AT THE JOB SITE, AND SHALL NOTIFY THE ENGINEER IMMEDIATELY OF ANY ERRORS OR DISCREPANCIES IN REGARD TO SUCH DRAWINGS. DESCRIBING DESIGN INTENT, SHALL NOT INDICATE EVERY DETAIL OR SYSTEM FOR CONSTRUCTION. CONTRACTOR, SUB-CONTRACTORS, AND SUPPLIERS SHALL BE RESPONSIBLE TO PROVIDE ADDITIONAL DRAWINGS AS NECESSARY FOR PERMITS, ERECTION, INSTALLATION, AND CO-ORDINATION OF ALL WORK. CONTRACTOR, SUB-CONTRACTORS, AND SUPPLIERS SHALL BE RESPONSIBLE FOR ALL LABOR AND MATERIALS REQUIRED IN ACCORDANCE WITH DESIGN INTENT. ALL MATERIALS SHALL BE NEW, UNLESS SPECIFIED OTHERWISE, AND SHALL BE INSTALLED LEVEL, PLUMB, STRAIGHT, AND TRUE TO LINE, IN ACCORDANCE WITH THE BEST PRACTICES OF THE TRADES. THE ENGINEER SHALL NOT BE RESPONSIBLE FOR CONSTRUCTION MEANS, METHODS, TECHNIQUES, SEQUENCES OR PROCEDURES, OR FOR SAFETY PRECAUTIONS AND PROGRAMS IN CONNECTION WITH THE WORK. ALL WORK SHALL BE PERFORMED IN ACCORDANCE WITH APPLICABLE CODES AND ORDINANCES.

REFERENCE DRAWINGS:

REV #	DATE	DESCRIPTION	DRWN	CHKD	APVD
A	12-05-25	ISSUED FOR APPROVAL	GS	DLH	PDN

REV #	DATE	DESCRIPTION	DRWN	CHKD	APVD

MOTIVA

CLIENT: MOTIVA ENTERPRISES LLC
PLANT: PORT ARTHUR REFINERY
JOB NO:

PIPING & INSTRUMENTATION DIAGRAM
STEAM UNIT
BOILER A
FD FAN STEAM TURBINE

PROJ TITLE: AROMATICS UTILITY SCOPE REVIEW

SSP ENGINEERING & CONSULTING
13100 NORTHWEST FREEWAY
SUITE 625,
HOUSTON, TEXAS 77040

FIRM NUMBER #13619

PROJECT NO: 25MA02	SCALE: NONE
DRAWN BY: GS	CHECKED: APB
DESIGN BY:	ENG APVL: PDN
DRAWING NO: 1100-PID-0021	REV A

DRAWING: 1100-pid-0021.dwg, PLOTTED BY: jason, PLOT DATE: ----, DRAWING LOCATION: c:\users\jason\onedrive - engineep's files - 25ma02 - aromatics utility scope cold eyes review\04 - design\04 - process\pids, (Border Rev1 5.16.25)

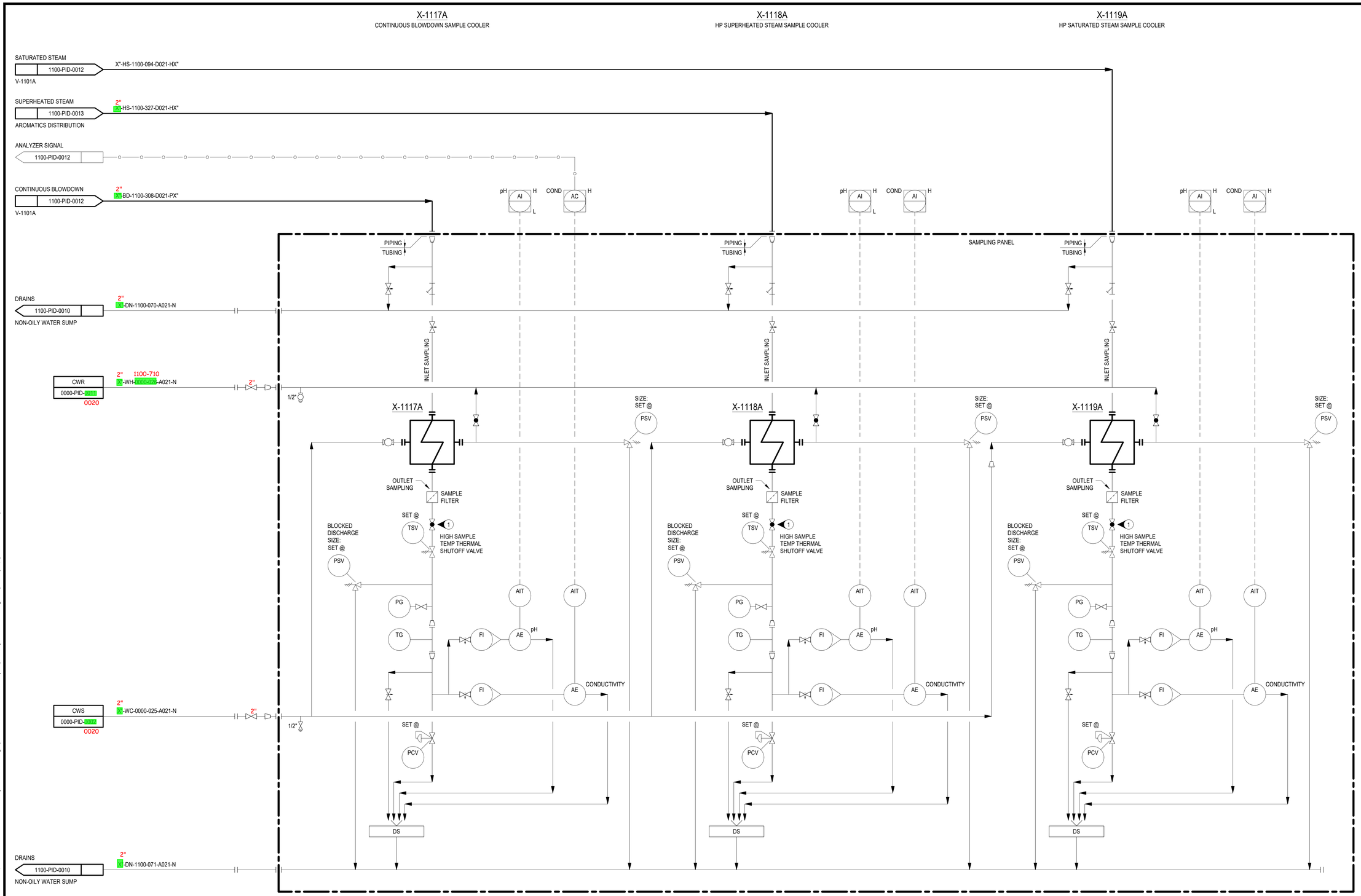

GENERAL NOTES

A. FOR PIPING AND INSTRUMENTATION LEGENDS AND SYMBOLS, SEE P&IDs 0000-PID-0001 THRU 0000-PID-00XX.

B. INSTRUMENT NUMBERS ON THIS P&ID ARE PREFIXED BY THE UNIT NUMBER ASSOCIATED WITH THIS P&ID UNLESS OTHERWISE SPECIFIED.

C. CONTROL VALVES AND BYPASS SIZES ARE PRELIMINARY AND WILL BE CONFIRMED DURING DETAIL DESIGN.

NOTES

1. VARIABLE PRESSURE REDUCING ELEMENT.

CHECK PRINT

NOT PUBLISHED. ALL RIGHTS RESERVED BY THE ENGINEER. DRAWINGS AND SPECIFICATIONS, AS INSTRUMENTS OF SERVICE, ARE ISSUED TO DESCRIBE DESIGN INTENT. THEY ARE NOT TO BE USED ON OTHER PROJECTS OR EXTENSIONS TO THIS PROJECT, EXCEPT BY AGREEMENT IN WRITING AND WITH APPROPRIATE COMPENSATION TO THE ENGINEER. CONTRACTOR, SUB-CONTRACTORS, & SUPPLIERS ARE RESPONSIBLE FOR CONFIRMING AND CORRELATING DIMENSIONS AND CONDITIONS AT THE JOB SITE, AND SHALL NOTIFY THE ENGINEER IMMEDIATELY OF ANY ERRORS OR DISCREPANCIES IN REGARD TO SUCH. DRAWINGS, DESCRIBING DESIGN INTENT, SHALL NOT INDICATE EVERY DETAIL OR SYSTEM FOR CONSTRUCTION. CONTRACTOR, SUB-CONTRACTORS, AND SUPPLIERS SHALL BE RESPONSIBLE TO PROVIDE ADDITIONAL DRAWINGS AS NECESSARY FOR PERMITS, ERECTION, INSTALLATION, AND CO-ORDINATION OF ALL WORK. CONTRACTOR, SUB-CONTRACTORS, AND SUPPLIERS SHALL BE RESPONSIBLE FOR ALL LABOR AND MATERIALS REQUIRED IN ACCORDANCE WITH DESIGN INTENT. ALL MATERIALS SHALL BE NEW, UNLESS SPECIFIED OTHERWISE, AND SHALL BE INSTALLED LEVEL, PLUMB, STRAIGHT, AND TRUE TO LINE, IN ACCORDANCE WITH THE BEST PRACTICES OF THE TRADES. THE ENGINEER SHALL NOT BE RESPONSIBLE FOR CONSTRUCTION MEANS, METHODS, TECHNIQUES, SEQUENCES OR PROCEDURES, OR FOR SAFETY PRECAUTIONS AND PROGRAMS IN CONNECTION WITH THE WORK. ALL WORK SHALL BE PERFORMED IN ACCORDANCE WITH APPLICABLE CODES AND ORDINANCES.

DRAWING: 1100-pid-0022.dwg PLOTTED BY: jason PLOT DATE: ---- DRAWING LOCATION: c:\users\jason\onedrive - engineering files - 25ma02 - aromatics utility scope cold eyes review\04 - design\04 - process\pids, (Border Rev1 5.16.25)

REFERENCE DRAWINGS:

REV #	DATE	DESCRIPTION	DRWN	CHKD	APVD
A	12-05-25	ISSUED FOR APPROVAL	GS	APB	PDN

REV #	DATE	DESCRIPTION	DRWN	CHKD	APVD

MOTIVA

CLIENT: MOTIVA ENTERPRISES LLC
PLANT: PORT ARTHUR REFINERY
JOB NO:

PIPING & INSTRUMENTATION DIAGRAM

STEAM UNIT
BOILER A BLOWDOWN WATER
AND STEAM SAMPLING

PROJ TITLE: AROMATICS UTILITY SCOPE REVIEW

SSP ENGINEERING & CONSULTING
13100 NORTHWEST FREEWAY
SUITE 625,
HOUSTON, TEXAS 77040

FIRM NUMBER #13619

PROJECT NO: 25MA02	SCALE: NONE
DRAWN BY: GS	CHECKED: APB
DESIGN BY:	ENG APVL: PDN
DRAWING NO: 1100-PID-0022	REV A

TT-1102

PHOSPHATE STACKED TOTE
SIZE ID x HEIGHT :
TOTAL VOLUME :
DESIGN PRESSURE :
DESIGN TEMP :
MOC :
TRIM : VT-1100-631-A130-N
INSULATION / TRACING :

P-1102A/B

PHOSPHATE PUMPS
RATED CAPACITY :
DIFFERENTIAL PRESSURE :
RATED POWER :
MOC (CASING / INTERNAL) :
INSULATION / TRACING :
TRIM : VT-1100-632-D130-N
SEAL PLAN :

GENERAL NOTES

A. FOR PIPING AND INSTRUMENTATION LEGENDS AND SYMBOLS, SEE P&IDs 0000-PID-0001 THRU 0000-PID-00XX.
B. INSTRUMENT NUMBERS ON THIS P&ID ARE PREFIXED BY THE UNIT NUMBER ASSOCIATED WITH THIS P&ID UNLESS OTHERWISE SPECIFIED.
C. CONTROL VALVES AND BYPASS SIZES ARE PRELIMINARY AND WILL BE CONFIRMED DURING DETAIL DESIGN.

NOTES

1. STACKED TOTE.
2. STROKE FEEDBACK.
3. TOP OF VENT IS LOCATED HIGHER THAN TOP OF TANK.
4. OPEN END DRAIN TO CURB AREA.
5. ALL MOTOR DRIVEN EQUIPMENT PROVIDED WITH A 3 POSITION START / RUN / STOP SWITCH. SPRING RETURN FROM START TO RUN, MAINTAINED STOP.
6. ALL CHEMICAL INJECTIONS WILL BE IN COMMON CURBED AREA WITH ONE SUMP AND ONE 2" STAND PIPE.
7. THE SELECTION SWITCH IS USED TO SELECT THE SPARE INJECTION DEVICE TO REPLACE ANY ONE OF THE THREE INJECTION DEVICES WHICH IS OFFLINE FOR MAINTENANCE.

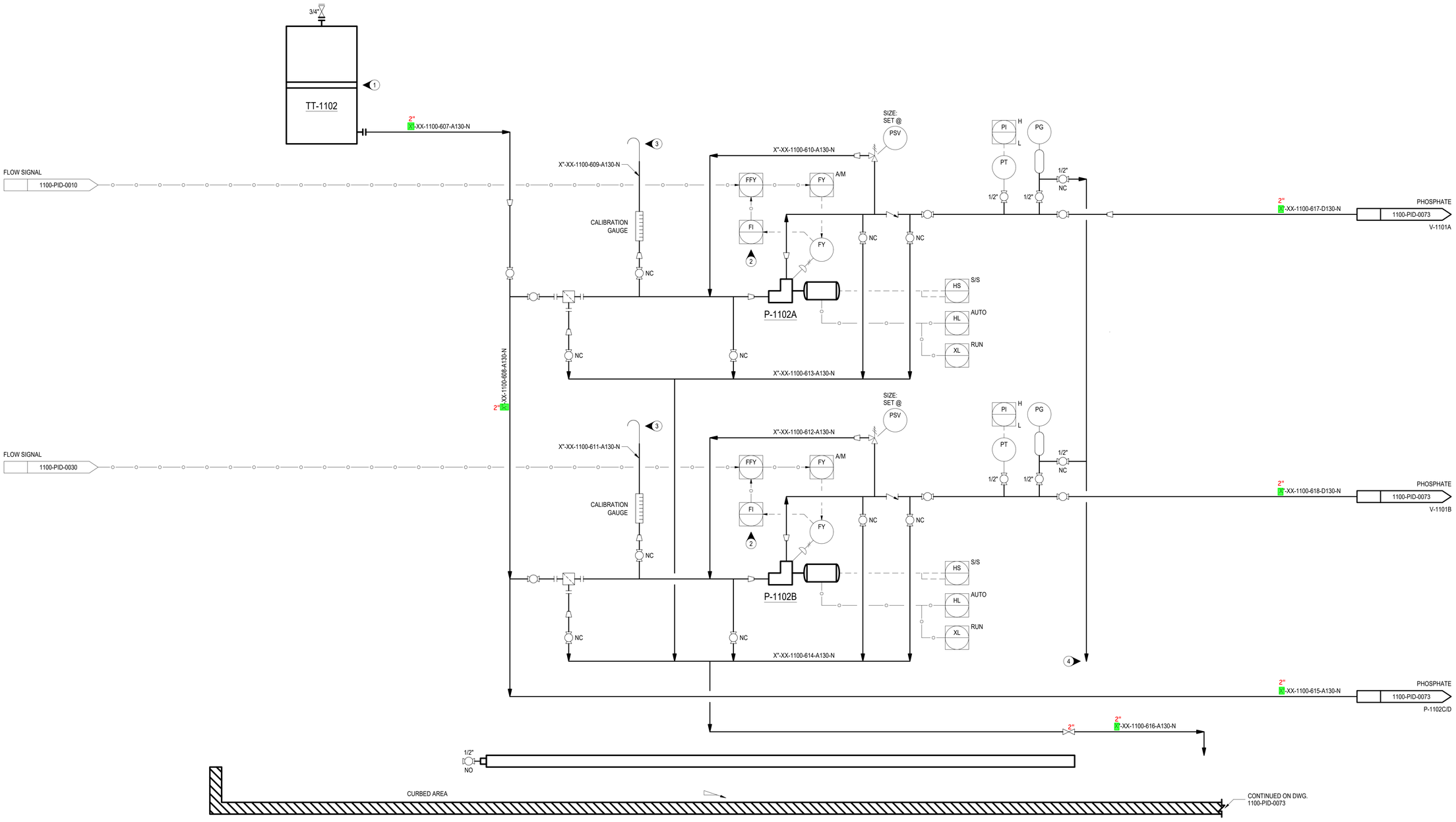

CHECK PRINT

NOT PUBLISHED. ALL RIGHTS RESERVED BY THE ENGINEER. DRAWINGS AND SPECIFICATIONS, AS INSTRUMENTS OF SERVICE, ARE ISSUED TO DESCRIBE DESIGN INTENT. THEY ARE NOT TO BE USED ON OTHER PROJECTS OR EXTENSIONS TO THIS PROJECT, EXCEPT BY AGREEMENT IN WRITING AND WITH APPROPRIATE COMPENSATION TO THE ENGINEER. CONTRACTOR, SUB-CONTRACTORS, & SUPPLIERS ARE RESPONSIBLE FOR CONFIRMING AND CORRELATING DIMENSIONS AND CONDITIONS AT THE JOB SITE, AND SHALL NOTIFY THE ENGINEER IMMEDIATELY OF ANY ERRORS OR DISCREPANCIES IN REGARD TO SUCH. DRAWINGS, DESCRIBING DESIGN INTENT, SHALL NOT INDICATE EVERY DETAIL OR SYSTEM FOR CONSTRUCTION. CONTRACTOR, SUB-CONTRACTORS, AND SUPPLIERS SHALL BE RESPONSIBLE TO PROVIDE ADDITIONAL DRAWINGS AS NECESSARY FOR PERMITS, ERECTION, INSTALLATION, AND CO-ORDINATION OF ALL WORK. CONTRACTOR, SUB-CONTRACTORS, AND SUPPLIERS SHALL BE RESPONSIBLE FOR ALL LABOR AND MATERIALS REQUIRED IN ACCORDANCE WITH DESIGN INTENT. ALL MATERIALS SHALL BE NEW. UNLESS SPECIFIED OTHERWISE, AND SHALL BE INSTALLED LEVEL, PLUMB, STRAIGHT, AND TRUE TO LINE, IN ACCORDANCE WITH THE BEST PRACTICES OF THE TRADES. THE ENGINEER SHALL NOT BE RESPONSIBLE FOR CONSTRUCTION MEANS, METHODS, TECHNIQUES, SEQUENCES OR PROCEDURES, OR FOR SAFETY PRECAUTIONS AND PROGRAMS IN CONNECTION WITH THE WORK. ALL WORK SHALL BE PERFORMED IN ACCORDANCE WITH APPLICABLE CODES AND ORDINANCES.

REFERENCE DRAWINGS:

REV #	DATE	DESCRIPTION	DRWN	CHKD	APVD
A	12-05-25	ISSUED FOR APPROVAL	GS	APB	PDN

REV #	DATE	DESCRIPTION	DRWN	CHKD	APVD

MOTIVA

CLIENT: MOTIVA ENTERPRISES LLC
PLANT: PORT ARTHUR REFINERY
JOB NO:

PIPING & INSTRUMENTATION DIAGRAM
STEAM UNIT
PHOSPHATE PACKAGE

PROJ TITLE: AROMATICS UTILITY SCOPE REVIEW

SSP ENGINEERING & CONSULTING
13100 NORTHWEST FREEWAY
SUITE 625,
HOUSTON, TEXAS 77040

FIRM NUMBER #13619

PROJECT NO: 25MA02	SCALE: NONE
DRAWN BY: GS	CHECKED: APB
DESIGN BY:	ENG APVL: PDN
DRAWING NO: 1100-PID-0071	REV A

PLOTTED BY: jason. PLOT DATE: ---- DRAWING LOCATION: c:\users\jason\onedrive - engineer's files - 25ma02 - aromatics utility scope cold eyes review\04 - design\04 - process\pids, (Border Rev1 5.16.25)
DRAWING: 1100-pid-0071.dwg

P-1102C/D

PHOSPHATE PUMPS
RATED CAPACITY :
DIFFERENTIAL PRESSURE :
RATED POWER :
MOC (CASING / INTERNAL) :
INSULATION / TRACING :
TRIM : VT-1100-632-D130-N
SEAL PLAN :

GENERAL NOTES

A. FOR PIPING AND INSTRUMENTATION LEGENDS AND SYMBOLS, SEE P&IDs 0000-PID-0001 THRU 0000-PID-00XX.
B. INSTRUMENT NUMBERS ON THIS P&ID ARE PREFIXED BY THE UNIT NUMBER ASSOCIATED WITH THIS P&ID UNLESS OTHERWISE SPECIFIED.
C. CONTROL VALVES AND BYPASS SIZES ARE PRELIMINARY AND WILL BE CONFIRMED DURING DETAIL DESIGN.

NOTES

1. TOP OF VENT IS LOCATED HIGHER THAN TOP OF TANK.
2. OPEN END DRAIN TO CURB AREA.
3. ALL MOTOR DRIVEN EQUIPMENT PROVIDED WITH A 3 POSITION START / RUN / STOP SWITCH, SPRING RETURN FROM START TO RUN, MAINTAINED STOP.
4. ALL CHEMICAL INJECTIONS WILL BE IN COMMON CURBED AREA WITH ONE SUMP AND ONE 2" STAND PIPE.
5. THE SELECTION SWITCH IS USED TO SELECT THE SPARE INJECTION DEVICE TO REPLACE ANY ONE OF THE THREE INJECTION DEVICES WHICH IS OFFLINE FOR MAINTENANCE.
6. STROKE FEEDBACK.

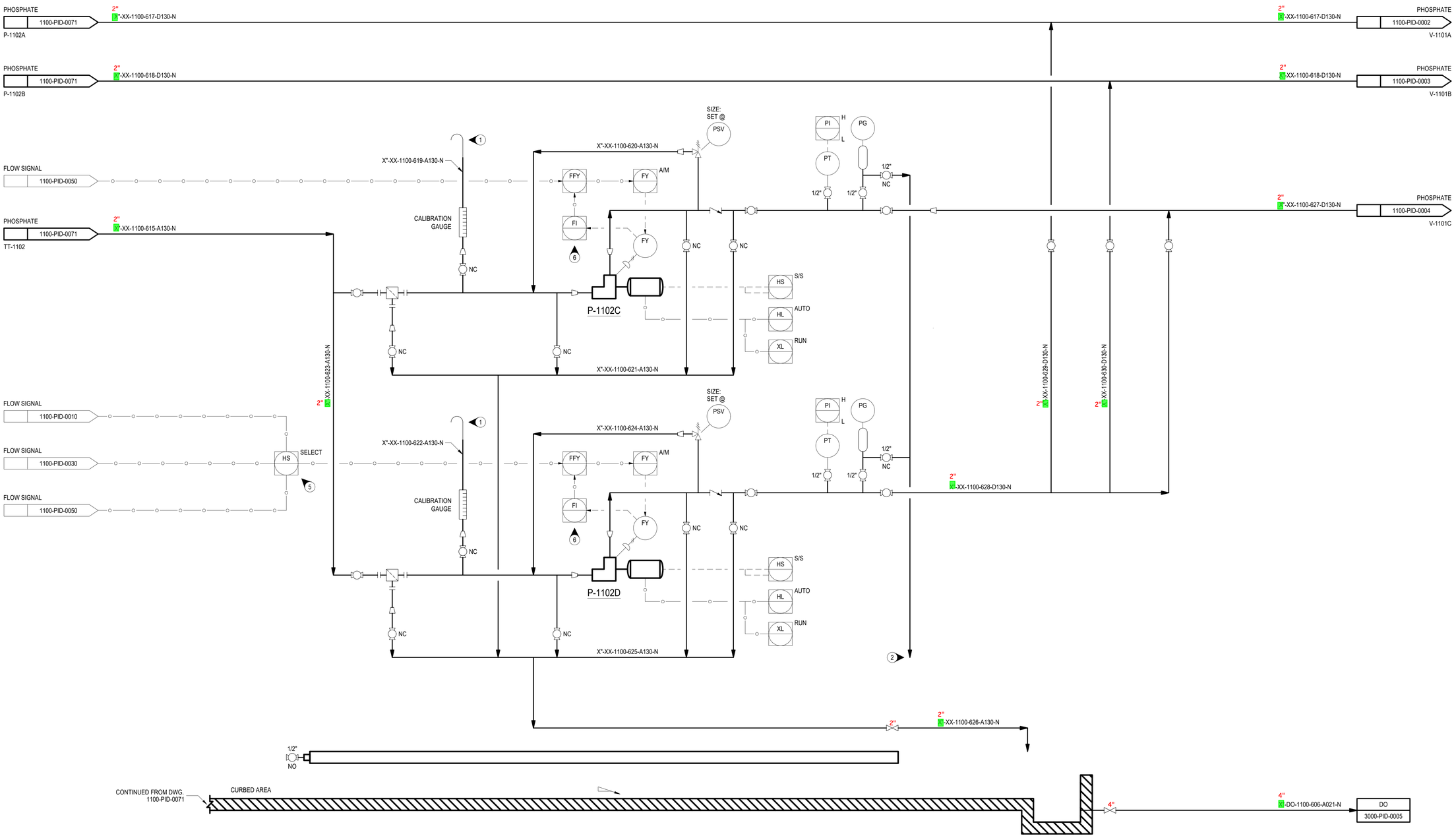

CHECK PRINT

NOT PUBLISHED. ALL RIGHTS RESERVED BY THE ENGINEER. DRAWINGS AND SPECIFICATIONS, AS INSTRUMENTS OF SERVICE, ARE ISSUED TO DESCRIBE DESIGN INTENT. THEY ARE NOT TO BE USED ON OTHER PROJECTS OR EXTENSIONS TO THIS PROJECT, EXCEPT BY AGREEMENT IN WRITING AND WITH APPROPRIATE COMPENSATION TO THE ENGINEER. CONTRACTOR, SUB-CONTRACTORS, & SUPPLIERS ARE RESPONSIBLE FOR CONFIRMING AND CORRELATING DIMENSIONS AND CONDITIONS AT THE JOB SITE, AND SHALL NOTIFY THE ENGINEER IMMEDIATELY OF ANY ERRORS OR DISCREPANCIES IN REGARD TO SUCH. DRAWINGS, DESCRIBING DESIGN INTENT, SHALL NOT INDICATE EVERY DETAIL OR SYSTEM FOR CONSTRUCTION. CONTRACTOR, SUB-CONTRACTORS, AND SUPPLIERS SHALL BE RESPONSIBLE TO PROVIDE ADDITIONAL DRAWINGS AS NECESSARY FOR PERMITS, ERECTION, INSTALLATION, AND CO-ORDINATION OF ALL WORK. CONTRACTOR, SUB-CONTRACTORS, AND SUPPLIERS SHALL BE RESPONSIBLE FOR ALL LABOR AND MATERIALS REQUIRED IN ACCORDANCE WITH DESIGN INTENT. ALL MATERIALS SHALL BE NEW. UNLESS SPECIFIED OTHERWISE, AND SHALL BE INSTALLED LEVEL, PLUMB, STRAIGHT, AND TRUE TO LINE, IN ACCORDANCE WITH THE BEST PRACTICES OF THE TRADES. THE ENGINEER SHALL NOT BE RESPONSIBLE FOR CONSTRUCTION MEANS, METHODS, TECHNIQUES, SEQUENCES OR PROCEDURES, OR FOR SAFETY PRECAUTIONS AND PROGRAMS IN CONNECTION WITH THE WORK. ALL WORK SHALL BE PERFORMED IN ACCORDANCE WITH APPLICABLE CODES AND ORDINANCES.

REFERENCE DRAWINGS:

REV #	DATE	DESCRIPTION	DRWN	CHKD	APVD
A	12-05-25	ISSUED FOR APPROVAL	GS	APB	PDN

REV #	DATE	DESCRIPTION	DRWN	CHKD	APVD

MOTIVA

CLIENT: MOTIVA ENTERPRISES LLC
PLANT: PORT ARTHUR REFINERY
JOB NO:

PIPING & INSTRUMENTATION DIAGRAM
STEAM UNIT
PHOSPHATE PACKAGE

PROJ TITLE: AROMATICS UTILITY SCOPE REVIEW

SSP ENGINEERING & CONSULTING
13100 NORTHWEST FREEWAY
SUITE 625,
HOUSTON, TEXAS 77040

FIRM NUMBER #13619

PROJECT NO: 25MA02	SCALE: NONE
DRAWN BY: GS	CHECKED: APB
DESIGN BY:	ENG APVL: PDN
DRAWING NO: 1100-PID-0073	REV A

DRAWING: 1100-pid-0073.dwg PLOTTED BY: jason PLOT DATE: ---- DRAWING LOCATION: c:\users\jason\onedrive - engineers files - 25ma02 - aromatics utility scope cold eyes review\04 - design\04 - process\pids, (Border Rev1 5.16.25)

V-1101

CONTINUOUS BLOWDOWN DRUM
SIZE :
TOTAL VOLUME :
DESIGN PRESSURE :
DESIGN TEMP :
MOC :
TRIM : VT-1100-639-D021-PX"
INSULATION / TRACING :

GENERAL NOTES

A. FOR PIPING AND INSTRUMENTATION LEGENDS AND SYMBOLS, SEE P&IDs 0000-PID-0001 THRU 0000-PID-00XX.

B. INSTRUMENT NUMBERS ON THIS P&ID ARE PREFIXED BY THE UNIT NUMBER ASSOCIATED WITH THIS P&ID UNLESS OTHERWISE SPECIFIED.

C. CONTROL VALVES AND BYPASS SIZES ARE PRELIMINARY AND WILL BE CONFIRMED DURING DETAIL DESIGN.

NOTES

1. 3/8" WEEP HOLE AT LOW POINT.
2. ALL UPPER L1A, L2A AND L3A NOZZLES ARE AT SAME ELEVATION. ALL LOWER L1B, L2B AND L3B NOZZLES ARE AT SAME ELEVATION.

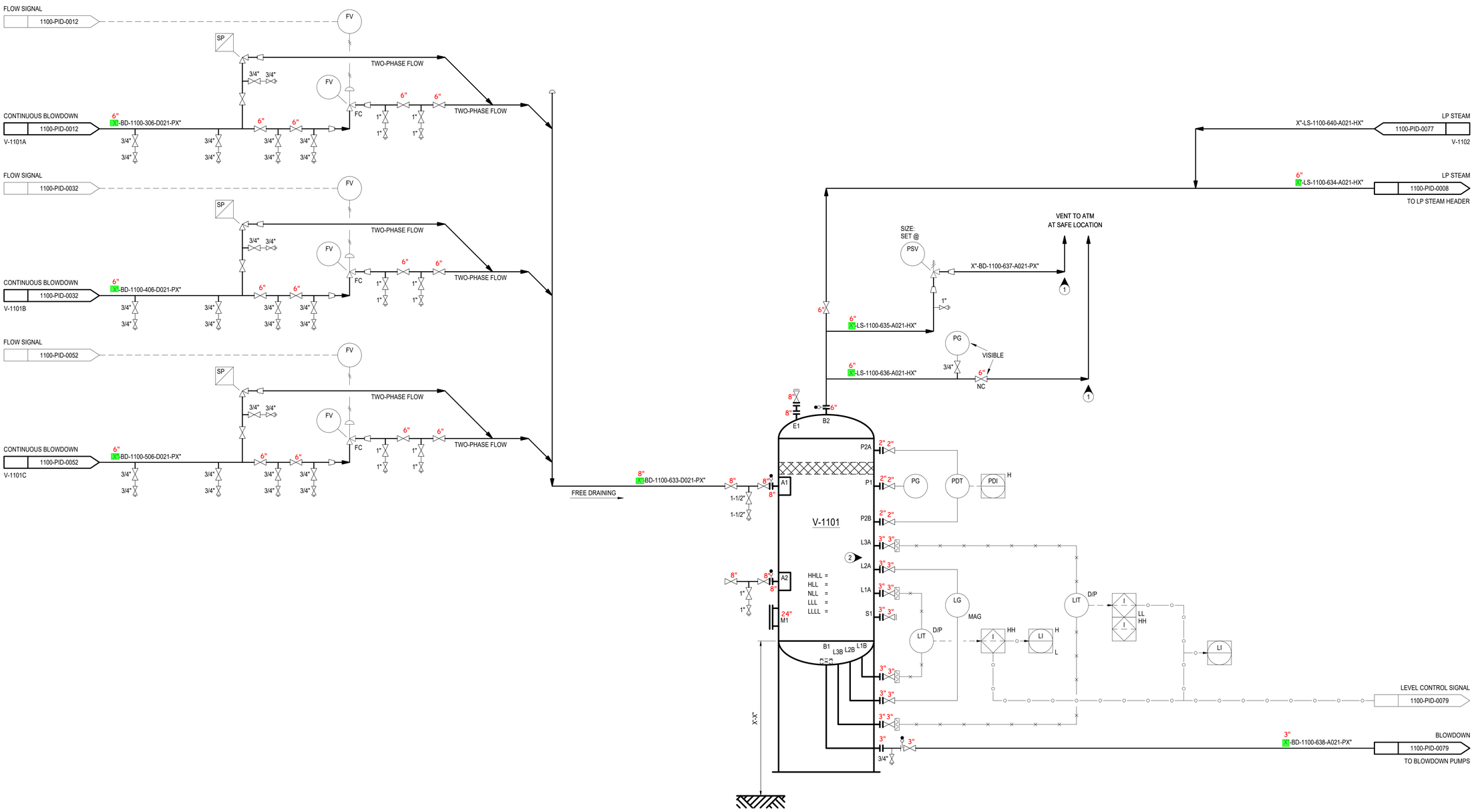

NOT PUBLISHED. ALL RIGHTS RESERVED BY THE ENGINEER. DRAWINGS AND SPECIFICATIONS, AS INSTRUMENTS OF SERVICE, ARE ISSUED TO DESCRIBE DESIGN INTENT. THEY ARE NOT TO BE USED ON OTHER PROJECTS OR EXTENSIONS TO THIS PROJECT, EXCEPT BY AGREEMENT IN WRITING AND WITH APPROPRIATE COMPENSATION TO THE ENGINEER. CONTRACTOR, SUB-CONTRACTORS, & SUPPLIERS ARE RESPONSIBLE FOR CONFIRMING AND CORRELATING DIMENSIONS AND CONDITIONS AT THE JOB SITE, AND SHALL NOTIFY THE ENGINEER IMMEDIATELY OF ANY ERRORS OR DISCREPANCIES IN REGARD TO SUCH DRAWINGS. DESCRIBING DESIGN INTENT, SHALL NOT INDICATE EVERY DETAIL OR SYSTEM FOR CONSTRUCTION. CONTRACTOR, SUB-CONTRACTORS, AND SUPPLIERS SHALL BE RESPONSIBLE TO PROVIDE ADDITIONAL DRAWINGS AS NECESSARY FOR PERMITS, ERECTION, INSTALLATION, AND CO-ORDINATION OF ALL WORK. CONTRACTOR, SUB-CONTRACTORS, AND SUPPLIERS SHALL BE RESPONSIBLE FOR ALL LABOR AND MATERIALS REQUIRED IN ACCORDANCE WITH DESIGN INTENT. ALL MATERIALS SHALL BE NEW, UNLESS SPECIFIED OTHERWISE, AND SHALL BE INSTALLED LEVEL, PLUMB, STRAIGHT, AND TRUE TO LINE, IN ACCORDANCE WITH THE BEST PRACTICES OF THE TRADES. THE ENGINEER SHALL NOT BE RESPONSIBLE FOR CONSTRUCTION MEANS, METHODS, TECHNIQUES, SEQUENCES OR PROCEDURES, OR FOR SAFETY PRECAUTIONS AND PROGRAMS IN CONNECTION WITH THE WORK. ALL WORK SHALL BE PERFORMED IN ACCORDANCE WITH APPLICABLE CODES AND ORDINANCES.

REFERENCE DRAWINGS:

REV #	DATE	DESCRIPTION	DRWN	CHKD	APVD
A	12-05-25	ISSUED FOR APPROVAL	GS	APB	PDN

REV #	DATE	DESCRIPTION	DRWN	CHKD	APVD

MOTIVA

CLIENT: MOTIVA ENTERPRISES LLC
PLANT: PORT ARTHUR REFINERY
JOB NO:

PIPING & INSTRUMENTATION DIAGRAM
STEAM UNIT
CONTINUOUS BLOWDOWN DRUM

PROJ TITLE: AROMATICS UTILITY SCOPE REVIEW

SSP ENGINEERING & CONSULTING
13100 NORTHWEST FREEWAY
SUITE 625,
HOUSTON, TEXAS 77040

FIRM NUMBER #13619

PROJECT NO: 25MA02	SCALE: NONE
DRAWN BY: GS	CHECKED: APB
DESIGN BY:	ENG APVL: PDN
DRAWING NO: 1100-PID-0075	REV A

CHECK PRINT

DRAWING: 1100-pid-0075.dwg PLOTTED BY: ssp_1 PLOT DATE: ---- DRAWING LOCATION: c:\users\ssp_fileng\ssp - projects\motiva\25ma02 - aromatics utility scope cold eyes review\04 - design\04 - process\pids, (Border Rev1 5.16.25)

③ ▶ V-1102

INTERMITTENT BLOWDOWN DRUM
SIZE :
TOTAL VOLUME :
DESIGN PRESSURE :
DESIGN TEMP :
MOC :
TRIM :
INSULATION / TRACING :

GENERAL NOTES

A. FOR PIPING AND INSTRUMENTATION LEGENDS AND SYMBOLS, SEE P&IDs 0000-PID-0001 THRU 0000-PID-00XX.

B. INSTRUMENT NUMBERS ON THIS P&ID ARE PREFIXED BY THE UNIT NUMBER ASSOCIATED WITH THIS P&ID UNLESS OTHERWISE SPECIFIED.

C. CONTROL VALVES AND BYPASS SIZES ARE PRELIMINARY AND WILL BE CONFIRMED DURING DETAIL DESIGN.

NOTES

1. 3/8" WEEP HOLE AT LOW POINT.
2. UPPER L1A AND L2A NOZZLES ARE AT SAME ELEVATION. LOWER L1B AND L2B NOZZLES ARE AT SAME ELEVATION.
3. NEED FOR INTERMITTENT BLOWDOWN WILL BE DETERMINED WHEN BOILER IS SELECTED.

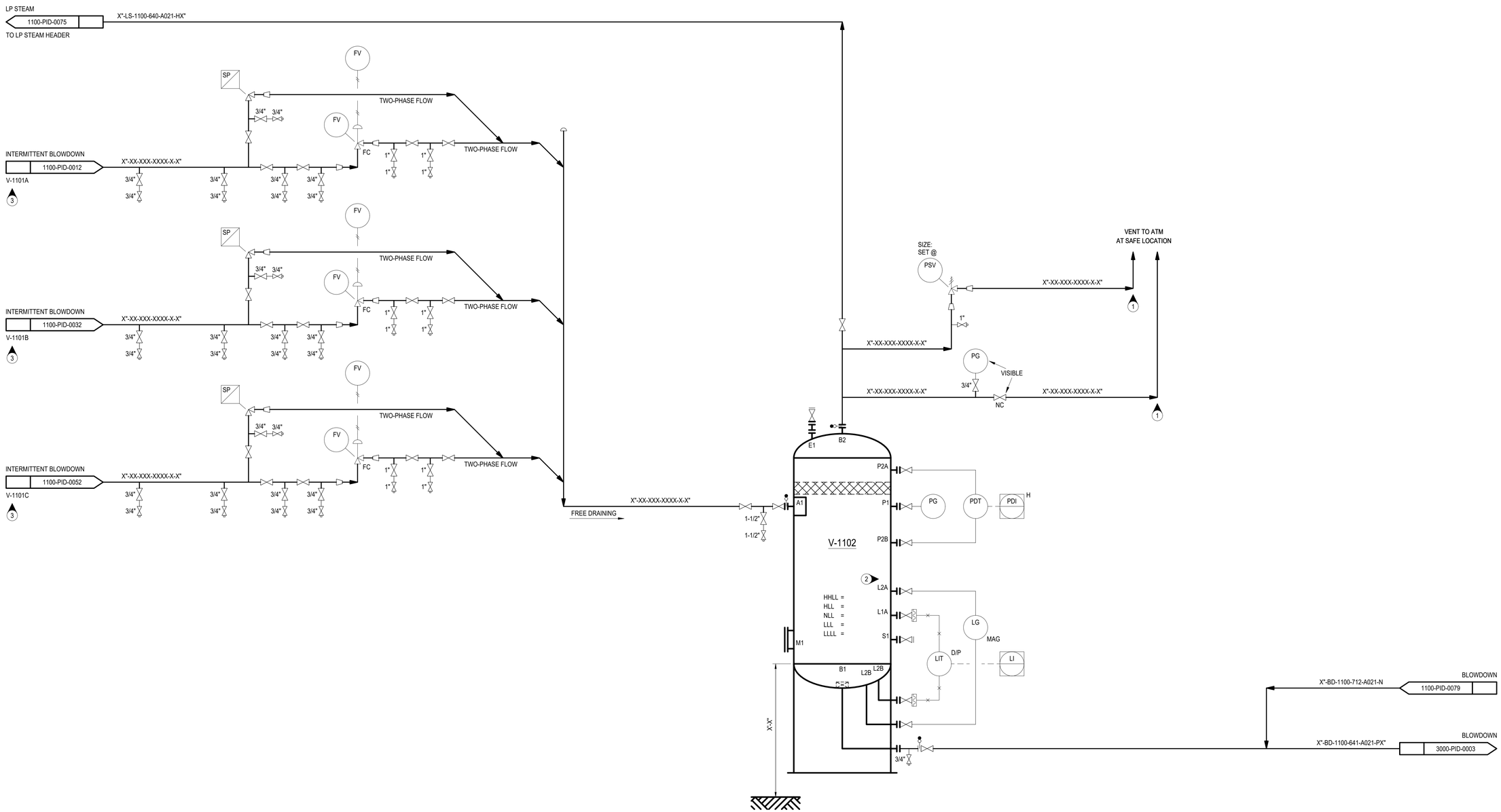

CHECK PRINT

NOT PUBLISHED. ALL RIGHTS RESERVED BY THE ENGINEER. DRAWINGS AND SPECIFICATIONS, AS INSTRUMENTS OF SERVICE, ARE ISSUED TO DESCRIBE DESIGN INTENT. THEY ARE NOT TO BE USED ON OTHER PROJECTS OR EXTENSIONS TO THIS PROJECT, EXCEPT BY AGREEMENT IN WRITING AND WITH APPROPRIATE COMPENSATION TO THE ENGINEER. CONTRACTOR, SUB-CONTRACTORS, & SUPPLIERS ARE RESPONSIBLE FOR CONFIRMING AND CORRELATING DIMENSIONS AND CONDITIONS AT THE JOB SITE, AND SHALL NOTIFY THE ENGINEER IMMEDIATELY OF ANY ERRORS OR DISCREPANCIES IN REGARD TO SUCH. DRAWINGS, DESCRIBING DESIGN INTENT, SHALL NOT INDICATE EVERY DETAIL OR SYSTEM FOR CONSTRUCTION. CONTRACTOR, SUB-CONTRACTORS, AND SUPPLIERS SHALL BE RESPONSIBLE TO PROVIDE ADDITIONAL DRAWINGS AS NECESSARY FOR PERMITS, ERECTION, INSTALLATION, AND CO-ORDINATION OF ALL WORK. CONTRACTOR, SUB-CONTRACTORS, AND SUPPLIERS SHALL BE RESPONSIBLE FOR ALL LABOR AND MATERIALS REQUIRED IN ACCORDANCE WITH DESIGN INTENT. ALL MATERIALS SHALL BE NEW, UNLESS SPECIFIED OTHERWISE, AND SHALL BE INSTALLED LEVEL, PLUMB, STRAIGHT, AND TRUE TO LINE, IN ACCORDANCE WITH THE BEST PRACTICES OF THE TRADES. THE ENGINEER SHALL NOT BE RESPONSIBLE FOR CONSTRUCTION MEANS, METHODS, TECHNIQUES, SEQUENCES OR PROCEDURES, OR FOR SAFETY PRECAUTIONS AND PROGRAMS IN CONNECTION WITH THE WORK. ALL WORK SHALL BE PERFORMED IN ACCORDANCE WITH APPLICABLE CODES AND ORDINANCES.

REFERENCE DRAWINGS:

REV #	DATE	DESCRIPTION	DRWN	CHKD	APVD
A	12-05-25	ISSUED FOR APPROVAL	GS	APB	PDN

REV #	DATE	DESCRIPTION	DRWN	CHKD	APVD

MOTIVA

CLIENT: MOTIVA ENTERPRISES LLC
PLANT: PORT ARTHUR REFINERY
JOB NO:

PIPING & INSTRUMENTATION DIAGRAM
STEAM UNIT
INTERMITTENT BLOWDOWN DRUM

PROJ TITLE: AROMATICS UTILITY SCOPE REVIEW

SSP ENGINEERING & CONSULTING
13100 NORTHWEST FREEWAY
SUITE 625,
HOUSTON, TEXAS 77040

FIRM NUMBER #13619

PROJECT NO: 25MA02	SCALE: NONE
DRAWN BY: GS	CHECKED: APB
DESIGN BY:	ENG APVL: PDN
DRAWING NO: 1100-PID-0077	REV A

DRAWING: 1100-pid-0077.dwg, PLOTTED BY: ssp_t, PLOT DATE: ----, DRAWING LOCATION: c:\users\ssp_fang\ssp - projects\motiva\35ma02 - aromatics utility scope cold eyes review\04 - design\04 - process\pids, (Border Rev1 5.16.25)

P-1101A/B

BLOWDOWN PUMPS
RATED CAPACITY :
DIFFERENTIAL PRESSURE :
RATED POWER :
MOC (CASING / INTERNAL) :
INSULATION / TRACING :
TRIM : VT-1100-654-A021-PX"
SEAL PLAN :

HE-1101

BLOWDOWN COOLER
RATED DUTY :
NUMBER OF CELLS :
DESIGN TEMP :
RATED POWER :
MOC :
TRIM : VT-1100-655-A021-PX"

HE-1102

BLOWDOWN TRIM COOLER
TYPE :
DUTY :
SURFACE AREA :
SHELL DESIGN PRESS @ TEMP :
TUBE DESIGN PRESS @ TEMP :
MOC (SHELL / TUBES) :
TRIM (SHELL / TUBES) : VT-1100-656-A021-PX"
INSULATION :

GENERAL NOTES

A. FOR PIPING AND INSTRUMENTATION LEGENDS AND SYMBOLS, SEE P&IDs 0000-PID-0001 THRU 0000-PID-00XX.
B. INSTRUMENT NUMBERS ON THIS P&ID ARE PREFIXED BY THE UNIT NUMBER ASSOCIATED WITH THIS P&ID UNLESS OTHERWISE SPECIFIED.
C. CONTROL VALVES AND BYPASS SIZES ARE PRELIMINARY AND WILL BE CONFIRMED DURING DETAIL DESIGN.

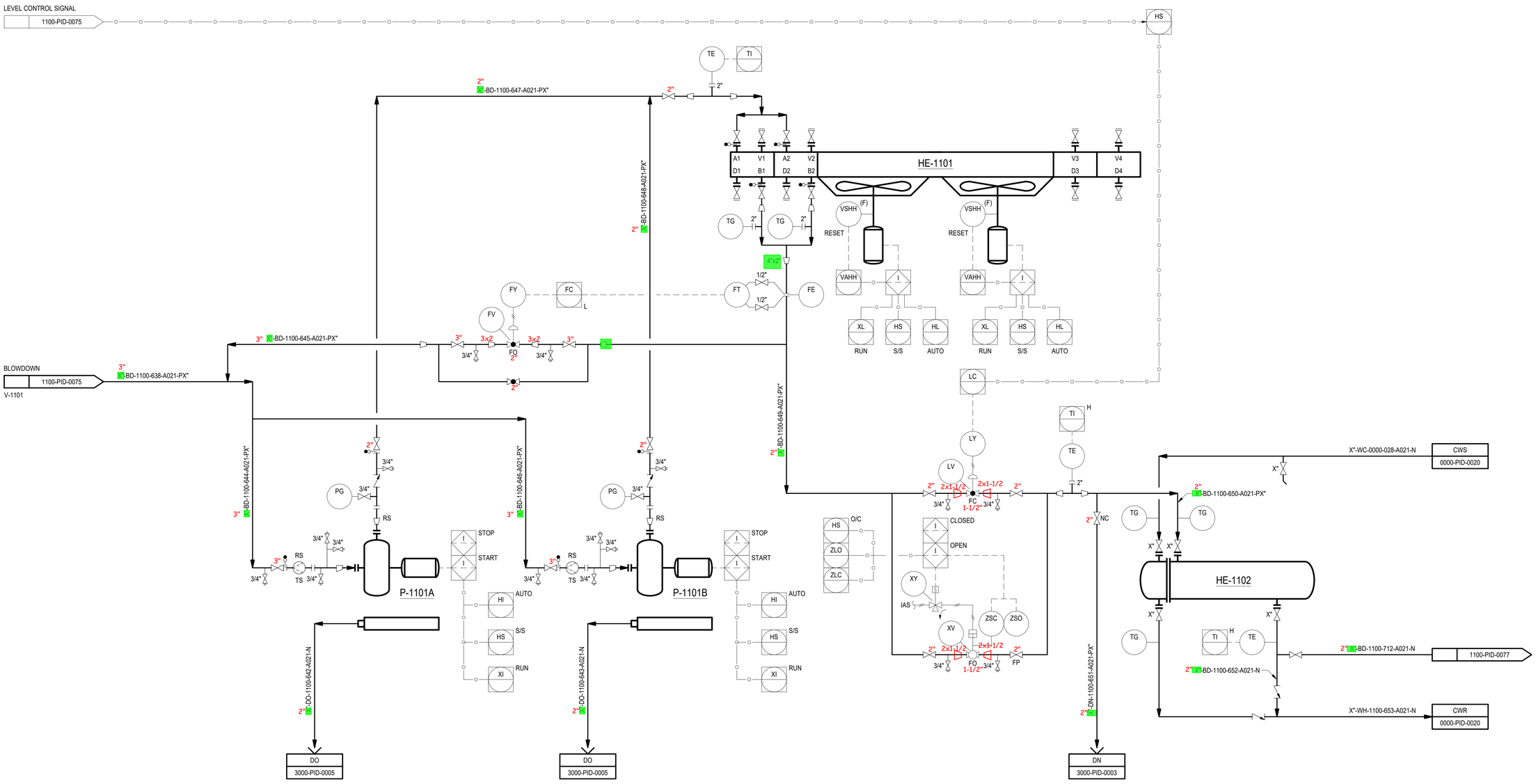

CHECK PRINT

NOT PUBLISHED. ALL RIGHTS RESERVED BY THE ENGINEER. DRAWINGS AND SPECIFICATIONS, AS INSTRUMENTS OF SERVICE, ARE ISSUED TO DESCRIBE DESIGN INTENT. THEY ARE NOT TO BE USED ON OTHER PROJECTS OR EXTENSIONS TO THIS PROJECT, EXCEPT BY AGREEMENT IN WRITING AND WITH APPROPRIATE COMPENSATION TO THE ENGINEER. CONTRACTOR, SUB-CONTRACTORS, & SUPPLIERS ARE RESPONSIBLE FOR CONFIRMING AND CORRELATING DIMENSIONS AND CONDITIONS AT THE JOB SITE, AND SHALL NOTIFY THE ENGINEER IMMEDIATELY OF ANY ERRORS OR DISCREPANCIES IN REGARD TO SUCH DRAWINGS, DESCRIBING DESIGN INTENT, SHALL NOT INDICATE EVERY DETAIL OR SYSTEM FOR CONSTRUCTION. CONTRACTOR, SUB-CONTRACTORS, AND SUPPLIERS SHALL BE RESPONSIBLE TO PROVIDE ADDITIONAL DRAWINGS AS NECESSARY FOR PERMITS, ERECTION, INSTALLATION, AND CO-ORDINATION OF ALL WORK. CONTRACTOR, SUB-CONTRACTORS, AND SUPPLIERS SHALL BE RESPONSIBLE FOR ALL LABOR AND MATERIALS REQUIRED IN ACCORDANCE WITH DESIGN INTENT. ALL MATERIALS SHALL BE NEW, UNLESS SPECIFIED OTHERWISE, AND SHALL BE INSTALLED LEVEL, PLUMB, STRAIGHT, AND TRUE TO LINE, IN ACCORDANCE WITH THE BEST PRACTICES OF THE TRADES. THE ENGINEER SHALL NOT BE RESPONSIBLE FOR CONSTRUCTION MEANS, METHODS, TECHNIQUES, SEQUENCES OR PROCEDURES, OR FOR SAFETY PRECAUTIONS AND PROGRAMS IN CONNECTION WITH THE WORK. ALL WORK SHALL BE PERFORMED IN ACCORDANCE WITH APPLICABLE CODES AND ORDINANCES.

DRAWING: 1100-pid-0079.dwg, PLOTTED BY: jason, PLOT DATE: ----, DRAWING LOCATION: c:\users\jason\onedrive - engineg's files - 25ma02 - aromatics utility scope cold eyes review\04 - design\04 - process\pids, (Border Rev1 5.16.25)

REFERENCE DRAWINGS:

REV #	DATE	DESCRIPTION	DRWN	CHKD	APVD
A	12-05-25	ISSUED FOR APPROVAL	GS	APB	PDN

REV #	DATE	DESCRIPTION	DRWN	CHKD	APVD

MOTIVA

CLIENT: MOTIVA ENTERPRISES LLC
PLANT: PORT ARTHUR REFINERY
JOB NO:

PIPING & INSTRUMENTATION DIAGRAM
STEAM UNIT
BLOWDOWN PUMPS AND COOLER

PROJ TITLE: AROMATICS UTILITY SCOPE REVIEW

SSP ENGINEERING & CONSULTING
13100 NORTHWEST FREEWAY
SUITE 625,
HOUSTON, TEXAS 77040

FIRM NUMBER #13619

PROJECT NO: 25MA02	SCALE: NONE
DRAWN BY: GS	CHECKED: APB
DESIGN BY:	ENG APVL: PDN
DRAWING NO: 1100-PID-0079	REV A

X-1101A/B

HP TO MP DESUPERHEATER
RATED CAPACITY :
DESIGN PRESSURE :
DESIGN TEMP :
MOC :
TRIM : VT-1100-701-D021-HX"
INSULATION :

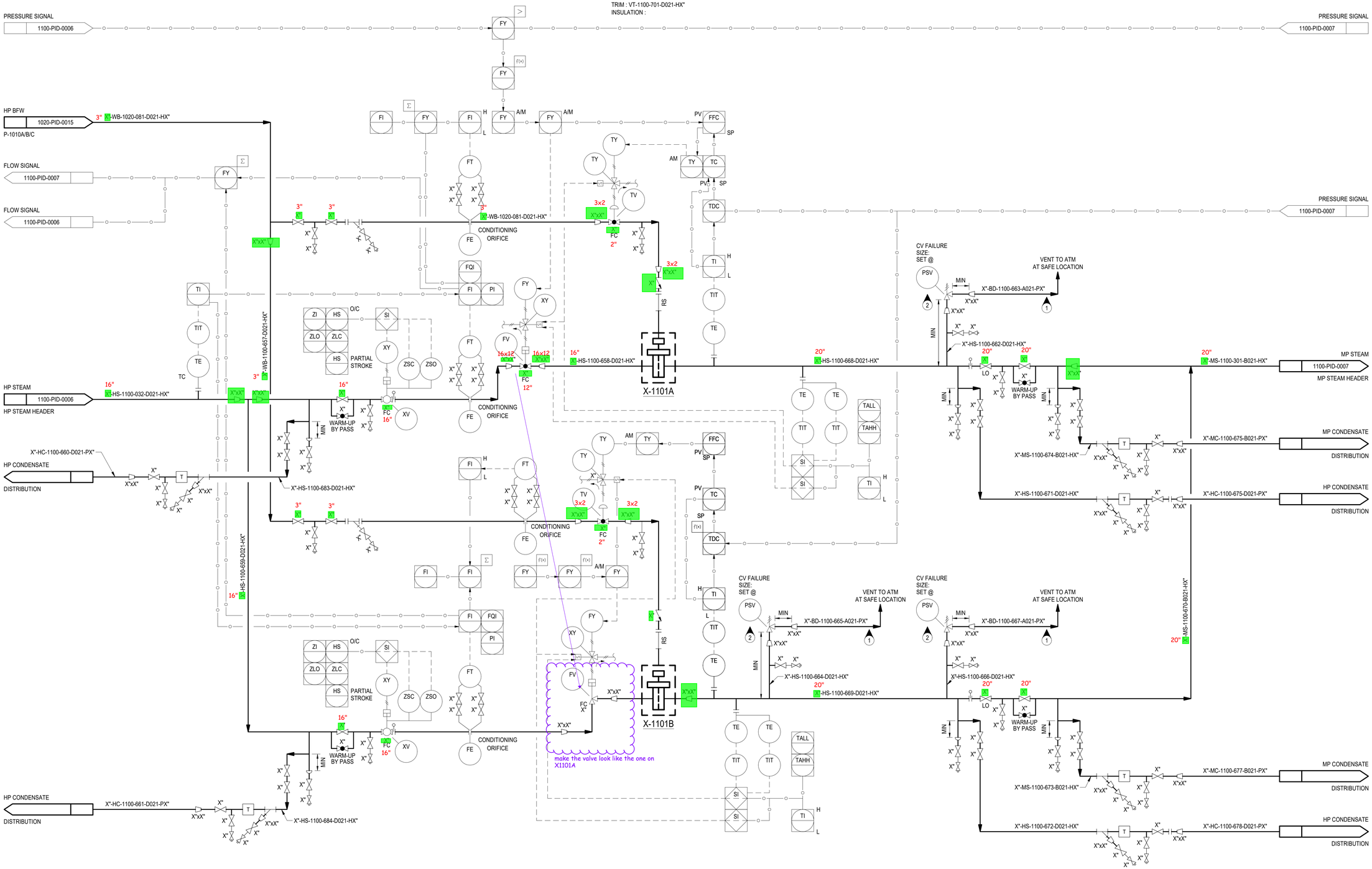

GENERAL NOTES

A. FOR PIPING AND INSTRUMENTATION LEGENDS AND SYMBOLS, SEE P&IDs 0000-PID-0001 THRU 0000-PID-00XX.

B. INSTRUMENT NUMBERS ON THIS P&ID ARE PREFIXED BY THE UNIT NUMBER ASSOCIATED WITH THIS P&ID UNLESS OTHERWISE SPECIFIED.

C. CONTROL VALVES AND BYPASS SIZES ARE PRELIMINARY AND WILL BE CONFIRMED DURING DETAIL DESIGN.

NOTES

1. 3/8" WEEP HOLE AT LOW POINT.
2. SIZE AND NUMBER OF PSV WILL BE DETERMINED IN SUBSEQUENT PHASE.

CHECK PRINT

NOT PUBLISHED, ALL RIGHTS RESERVED BY THE ENGINEER. DRAWINGS AND SPECIFICATIONS, AS INSTRUMENTS OF SERVICE, ARE ISSUED TO DESCRIBE DESIGN INTENT. THEY ARE NOT TO BE USED ON OTHER PROJECTS OR EXTENSIONS TO THIS PROJECT, EXCEPT BY AGREEMENT IN WRITING AND WITH APPROPRIATE COMPENSATION TO THE ENGINEER. CONTRACTOR, SUB-CONTRACTORS, & SUPPLIERS ARE RESPONSIBLE FOR CONFIRMING AND CORRELATING DIMENSIONS AND CONDITIONS AT THE JOB SITE, AND SHALL NOTIFY THE ENGINEER IMMEDIATELY OF ANY ERRORS OR DISCREPANCIES IN REGARD TO SUCH DRAWINGS, DESCRIBING DESIGN INTENT, SHALL NOT INDICATE EVERY DETAIL OR SYSTEM FOR CONSTRUCTION. CONTRACTOR, SUB-CONTRACTORS, AND SUPPLIERS SHALL BE RESPONSIBLE FOR PROVIDE ADDITIONAL DRAWINGS AS NECESSARY FOR PERMITS, ERECTION, INSTALLATION, AND CO-ORDINATION OF ALL WORK. CONTRACTOR, SUB-CONTRACTORS, AND SUPPLIERS SHALL BE RESPONSIBLE FOR ALL LABOR AND MATERIALS REQUIRED IN ACCORDANCE WITH DESIGN INTENT. ALL MATERIALS SHALL BE NEW, UNLESS SPECIFIED OTHERWISE, AND SHALL BE INSTALLED LEVEL, PLUMB, STRAIGHT, AND TRUE TO LINE, IN ACCORDANCE WITH THE BEST PRACTICES OF THE TRADES. THE ENGINEER SHALL NOT BE RESPONSIBLE FOR CONSTRUCTION MEANS, METHODS, TECHNIQUES, SEQUENCES OR PROCEDURES, OR FOR SAFETY PRECAUTIONS AND PROGRAMS IN CONNECTION WITH THE WORK. ALL WORK SHALL BE PERFORMED IN ACCORDANCE WITH APPLICABLE CODES AND ORDINANCES.

REFERENCE DRAWINGS:

REV #	DATE	DESCRIPTION	DRWN	CHKD	APVD
A	12-05-25	ISSUED FOR APPROVAL	GS	APB	PDN

REV #	DATE	DESCRIPTION	DRWN	CHKD	APVD

MOTIVA

CLIENT: MOTIVA ENTERPRISES LLC
PLANT: PORT ARTHUR REFINERY
JOB NO:

PIPING & INSTRUMENTATION DIAGRAM
STEAM UNIT
HP TO MP DESUPERHEATER

PROJ TITLE: AROMATICS UTILITY SCOPE REVIEW

SSP ENGINEERING & CONSULTING
13100 NORTHWEST FREEWAY
SUITE 625,
HOUSTON, TEXAS 77040

FIRM NUMBER #13619

PROJECT NO: 25MA02	SCALE: NONE
DRAWN BY: GS	CHECKED: APB
DESIGN BY:	ENG APVL: PDN
DRAWING NO: 1100-PID-0083	REV A

DRAWING: 1100-pid-0083.dwg PLOTTED BY: jason PLOT DATE: ---- DRAWING LOCATION: c:\users\jason\onedrive - engineip's files - 25ma02 - aromatics utility scope cold eyes review\04 - design\04 - process\pids, (Border Rev 5.18.25)

X-1102A/B

MP TO LP DESUPERHEATER
RATED CAPACITY :
DESIGN PRESSURE :
DESIGN TEMP :
MOC :
TRIM : VT-1100-702-B021-HX"
INSULATION :

GENERAL NOTES

A. FOR PIPING AND INSTRUMENTATION LEGENDS AND SYMBOLS, SEE P&IDs 0000-PID-0001 THRU 0000-PID-00XX.
B. INSTRUMENT NUMBERS ON THIS P&ID ARE PREFIXED BY THE UNIT NUMBER ASSOCIATED WITH THIS P&ID UNLESS OTHERWISE SPECIFIED.
C. CONTROL VALVES AND BYPASS SIZES ARE PRELIMINARY AND WILL BE CONFIRMED DURING DETAIL DESIGN.

NOTES

1. 3/8" WEEP HOLE AT LOW POINT.
2. SIZE AND NUMBER OF PSV WILL BE DETERMINED IN SUBSEQUENT PHASE.

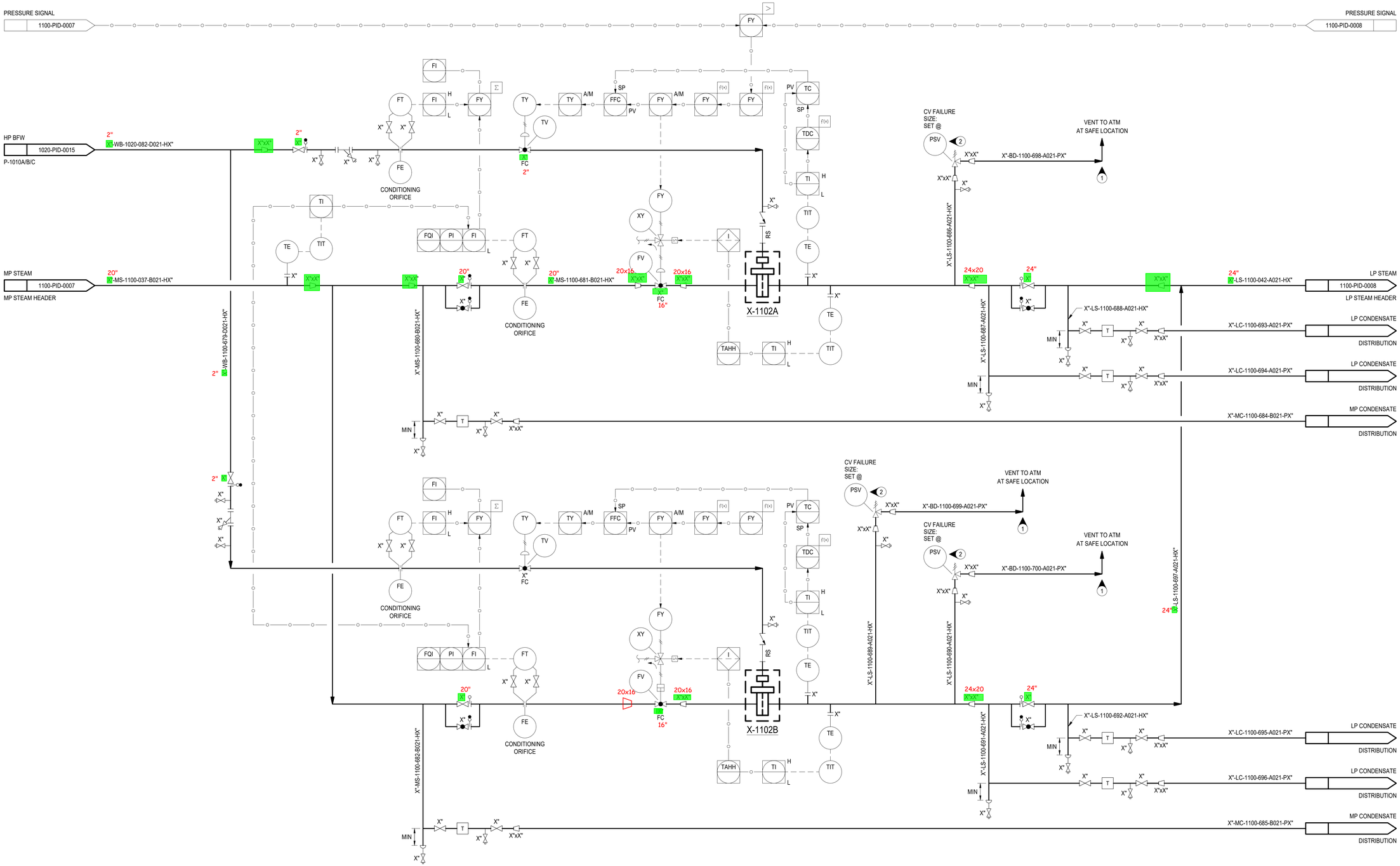

NOT PUBLISHED. ALL RIGHTS RESERVED BY THE ENGINEER. DRAWINGS AND SPECIFICATIONS, AS INSTRUMENTS OF SERVICE, ARE ISSUED TO DESCRIBE DESIGN INTENT. THEY ARE NOT TO BE USED ON OTHER PROJECTS OR EXTENSIONS TO THIS PROJECT, EXCEPT BY AGREEMENT IN WRITING AND WITH APPROPRIATE COMPENSATION TO THE ENGINEER. CONTRACTOR, SUB-CONTRACTORS, & SUPPLIERS ARE RESPONSIBLE FOR CONFIRMING AND CORRELATING DIMENSIONS AND CONDITIONS AT THE JOB SITE, AND SHALL NOTIFY THE ENGINEER IMMEDIATELY OF ANY ERRORS OR DISCREPANCIES IN REGARD TO SUCH. DRAWINGS, DESCRIBING DESIGN INTENT, SHALL NOT INDICATE EVERY DETAIL OR SYSTEM FOR CONSTRUCTION. CONTRACTOR, SUB-CONTRACTORS, AND SUPPLIERS SHALL BE RESPONSIBLE TO PROVIDE ADDITIONAL DRAWINGS AS NECESSARY FOR PERMITS, ERECTION, INSTALLATION, AND CO-ORDINATION OF ALL WORK. CONTRACTOR, SUB-CONTRACTORS, AND SUPPLIERS SHALL BE RESPONSIBLE FOR ALL LABOR AND MATERIALS REQUIRED IN ACCORDANCE WITH DESIGN INTENT. ALL MATERIALS SHALL BE NEW, UNLESS SPECIFIED OTHERWISE, AND SHALL BE INSTALLED LEVEL, PLUMB, STRAIGHT, AND TRUE TO LINE, IN ACCORDANCE WITH THE BEST PRACTICES OF THE TRADES. THE ENGINEER SHALL NOT BE RESPONSIBLE FOR CONSTRUCTION MEANS, METHODS, TECHNIQUES, SEQUENCES OR PROCEDURES, OR FOR SAFETY PRECAUTIONS AND PROGRAMS IN CONNECTION WITH THE WORK. ALL WORK SHALL BE PERFORMED IN ACCORDANCE WITH APPLICABLE CODES AND ORDINANCES.

REFERENCE DRAWINGS:

REV #	DATE	DESCRIPTION	DRWN	CHKD	APVD
A	12-05-25	ISSUED FOR APPROVAL	GS	APB	PDN

REV #	DATE	DESCRIPTION	DRWN	CHKD	APVD

MOTIVA

CLIENT: MOTIVA ENTERPRISES LLC
PLANT: PORT ARTHUR REFINERY
JOB NO:

PIPING & INSTRUMENTATION DIAGRAM
STEAM UNIT
MP TO LP DESUPERHEATER

PROJ TITLE: AROMATICS UTILITY SCOPE REVIEW

SSP ENGINEERING & CONSULTING
13100 NORTHWEST FREEWAY
SUITE 625,
HOUSTON, TEXAS 77040

FIRM NUMBER #13619

PROJECT NO: 25MA02	SCALE: NONE
DRAWN BY: GS	CHECKED: APB
DESIGN BY:	ENG APVL: PDN
DRAWING NO: 1100-PID-0087	REV A

CHECK PRINT

DRAWING: 1100-psd-0087.dwg PLOTTED BY: jason PLOT DATE: ---- DRAWING LOCATION: c:\users\jason\onedrive - engineers files - 25ma02 - aromatics utility scope cold eyes review\04 - design\04 - process\pids (Border Rev1 5.16.25)

V-1501

CONDENSATE FLASH DRUM
SIZE :
TOTAL VOLUME :
DESIGN PRESSURE :
DESIGN TEMP :
MOC :
TRIM : VT-1500-013-A021-PX"
INSULATION / TRACING :

GENERAL NOTES

A. FOR PIPING AND INSTRUMENTATION LEGENDS AND SYMBOLS, SEE P&IDs 0000-PID-0001 THRU 0000-PID-00XX.
B. INSTRUMENT NUMBERS ON THIS P&ID ARE PREFIXED BY THE UNIT NUMBER ASSOCIATED WITH THIS P&ID UNLESS OTHERWISE SPECIFIED.
C. CONTROL VALVES AND BYPASS SIZES ARE PRELIMINARY AND WILL BE CONFIRMED DURING DETAIL DESIGN.

NOTES

1. PRESSURE INDICATOR TO BE READABLE FROM BYPASS VALVE.
2. PROVIDE 3/8" WEEP HOLE AT LOW POINT.

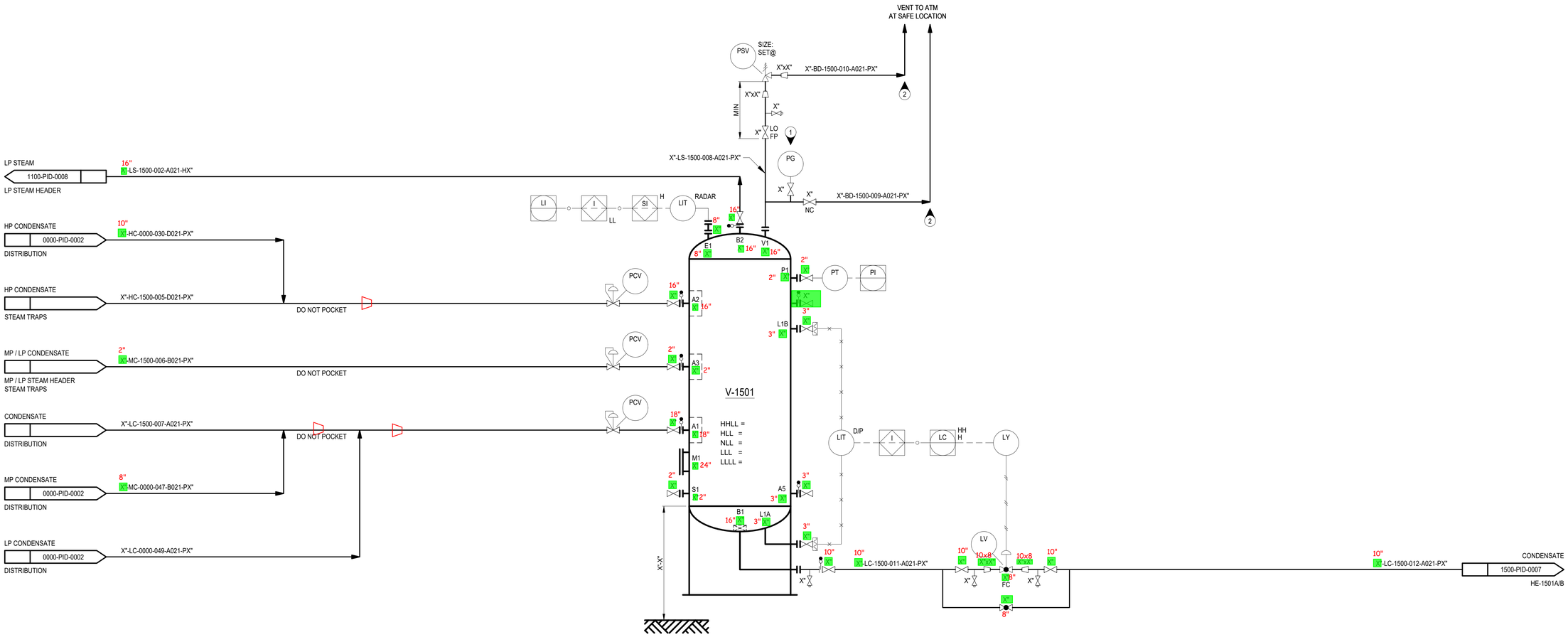

CHECK PRINT

NOT PUBLISHED, ALL RIGHTS RESERVED BY THE ENGINEER. DRAWINGS AND SPECIFICATIONS, AS INSTRUMENTS OF SERVICE, ARE ISSUED TO DESCRIBE DESIGN INTENT. THEY ARE NOT TO BE USED ON OTHER PROJECTS OR EXTENSIONS TO THIS PROJECT, EXCEPT BY AGREEMENT IN WRITING AND WITH APPROPRIATE COMPENSATION TO THE ENGINEER. CONTRACTOR, SUB-CONTRACTORS, & SUPPLIERS ARE RESPONSIBLE FOR CONFIRMING AND CORRELATING DIMENSIONS AND CONDITIONS AT THE JOB SITE, AND SHALL NOTIFY THE ENGINEER IMMEDIATELY OF ANY ERRORS OR DISCREPANCIES IN REGARD TO SUCH DRAWINGS, DESCRIBING DESIGN INTENT, SHALL NOT INDICATE EVERY DETAIL OR SYSTEM FOR CONSTRUCTION. CONTRACTOR, SUB-CONTRACTORS, AND SUPPLIERS SHALL BE RESPONSIBLE TO PROVIDE ADDITIONAL DRAWINGS AS NECESSARY FOR PERMITS, ERECTION, INSTALLATION, AND CO-ORDINATION OF ALL WORK. CONTRACTOR, SUB-CONTRACTORS, AND SUPPLIERS SHALL BE RESPONSIBLE FOR ALL LABOR AND MATERIALS REQUIRED IN ACCORDANCE WITH DESIGN INTENT. ALL MATERIALS SHALL BE NEW. UNLESS SPECIFIED OTHERWISE, AND SHALL BE INSTALLED LEVEL, PLUMB, STRAIGHT, AND TRUE TO LINE. IN ACCORDANCE WITH THE BEST PRACTICES OF THE TRADES. THE ENGINEER SHALL NOT BE RESPONSIBLE FOR CONSTRUCTION MEANS, METHODS, TECHNIQUES, SEQUENCES OR PROCEDURES, OR FOR SAFETY PRECAUTIONS AND PROGRAMS IN CONNECTION WITH THE WORK. ALL WORK SHALL BE PERFORMED IN ACCORDANCE WITH APPLICABLE CODES AND ORDINANCES.

DRAWING: 1500-pid-0001.dwg PLOTTED BY: jason PLOT DATE: ---- DRAWING LOCATION: c:\users\jason\onedrive - engineering's files - 25ma02 - aromatics utility scope cold eyes review\04 - design\04 - process\pids (Border Rev1 5.16.25)

REFERENCE DRAWINGS:

REV #	DATE	DESCRIPTION	DRWN	CHKD	APVD
A	12-05-25	ISSUED FOR APPROVAL	GS	APB	PDN

REV #	DATE	DESCRIPTION	DRWN	CHKD	APVD

MOTIVA

CLIENT: MOTIVA ENTERPRISES LLC
PLANT: PORT ARTHUR REFINERY
JOB NO:

PROCESS FLOW DIAGRAM
PIPING & INSTRUMENTATION DIAGRAM
CONDENSATE FLASH DRUM A

PROJ TITLE: AROMATICS UTILITY SCOPE REVIEW

SSP ENGINEERING & CONSULTING
13100 NORTHWEST FREEWAY
SUITE 625,
HOUSTON, TEXAS 77040

FIRM NUMBER #13619

PROJECT NO: 25MA02	SCALE: NONE
DRAWN BY: GS	CHECKED: APB
DESIGN BY:	ENG APVL: PDN
DRAWING NO: 1500-PID-0001	REV A

HE1501A/B

CONDENSATE EXCHANGER

TYPE :
RATED DUTY :
SURFACE AREA :
DESIGN PRESS @ TEMP (HOT SIDE) :
DESIGN PRESS @ TEMP (COLD SIDE) :
MOC :
TRIM (HOT / COLD) : VT-1500-028-A021-PX"
VT-1500-029-A130-PX"
INSULATION :

GENERAL NOTES

A. FOR PIPING AND INSTRUMENTATION LEGENDS AND SYMBOLS, SEE P&IDs 0000-PID-0001 THRU 0000-PID-00XX.

B. INSTRUMENT NUMBERS ON THIS P&ID ARE PREFIXED BY THE UNIT NUMBER ASSOCIATED WITH THIS P&ID UNLESS OTHERWISE SPECIFIED.

C. CONTROL VALVES AND BYPASS SIZES ARE PRELIMINARY AND WILL BE CONFIRMED DURING DETAIL DESIGN.

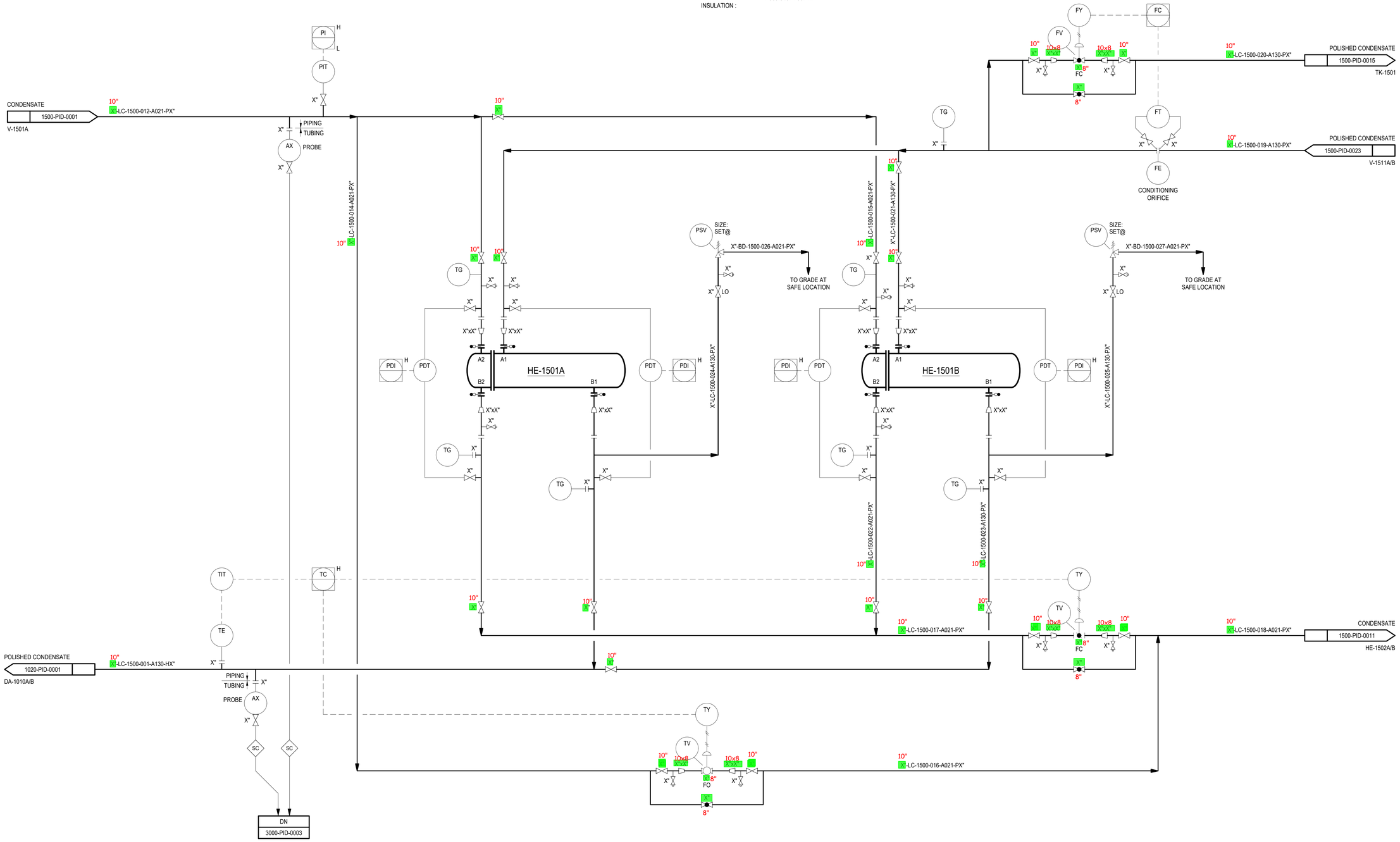

CHECK PRINT

NOT PUBLISHED. ALL RIGHTS RESERVED BY THE ENGINEER. DRAWINGS AND SPECIFICATIONS, AS INSTRUMENTS OF SERVICE, ARE ISSUED TO DESCRIBE DESIGN INTENT. THEY ARE NOT TO BE USED ON OTHER PROJECTS OR EXTENSIONS TO THIS PROJECT, EXCEPT BY AGREEMENT IN WRITING AND WITH APPROPRIATE COMPENSATION TO THE ENGINEER. CONTRACTOR, SUB-CONTRACTORS, & SUPPLIERS ARE RESPONSIBLE FOR CONFIRMING AND CORRELATING DIMENSIONS AND CONDITIONS AT THE JOB SITE, AND SHALL NOTIFY THE ENGINEER IMMEDIATELY OF ANY ERRORS OR DISCREPANCIES IN REGARD TO SUCH. DRAWINGS, DESCRIBING DESIGN INTENT, SHALL NOT INDICATE EVERY DETAIL OR SYSTEM FOR CONSTRUCTION. CONTRACTOR, SUB-CONTRACTORS, AND SUPPLIERS SHALL BE RESPONSIBLE TO PROVIDE ADDITIONAL DRAWINGS AS NECESSARY FOR PERMITS, ERECTION, INSTALLATION, AND CO-ORDINATION OF ALL WORK. CONTRACTOR, SUB-CONTRACTORS, AND SUPPLIERS SHALL BE RESPONSIBLE FOR ALL LABOR AND MATERIALS REQUIRED IN ACCORDANCE WITH DESIGN INTENT. ALL MATERIALS SHALL BE NEW, UNLESS SPECIFIED OTHERWISE, AND SHALL BE INSTALLED LEVEL, PLUMB, STRAIGHT, AND TRUE TO LINE, IN ACCORDANCE WITH THE BEST PRACTICES OF THE TRADES. THE ENGINEER SHALL NOT BE RESPONSIBLE FOR CONSTRUCTION MEANS, METHODS, TECHNIQUES, SEQUENCES OR PROCEDURES, OR FOR SAFETY PRECAUTIONS AND PROGRAMS IN CONNECTION WITH THE WORK. ALL WORK SHALL BE PERFORMED IN ACCORDANCE WITH APPLICABLE CODES AND ORDINANCES.

REFERENCE DRAWINGS:

REV #	DATE	DESCRIPTION	DRWN	CHKD	APVD
A	12-05-25	ISSUED FOR APPROVAL	GS	APB	PDN

REV #	DATE	DESCRIPTION	DRWN	CHKD	APVD

MOTIVA

CLIENT: MOTIVA ENTERPRISES LLC
PLANT: PORT ARTHUR REFINERY
JOB NO:

PIPING & INSTRUMENTATION DIAGRAM
CONDENSATE SYSTEM
CONDENSATE EXCHANGERS

PROJ TITLE: AROMATICS UTILITY SCOPE REVIEW

SSP ENGINEERING & CONSULTING
13100 NORTHWEST FREEWAY
SUITE 625,
HOUSTON, TEXAS 77040

FIRM NUMBER #13619

PROJECT NO: 25MA02	SCALE: NONE
DRAWN BY: GS	CHECKED: APB
DESIGN BY:	ENG APVL: PDN
DRAWING NO: 1500-PID-0007	REV A

DRAWING: 1500-pid-0007.dwg PLOTTED BY: jason PLOT DATE: ---- DRAWING LOCATION: c:\users\jason\onedrive - engineers files - 25ma02 - aromatics utility scope cold eyes review\04 - design\04 - process\pids (Border Rev1 5.16.25)

HE-1502A/B

CONDENSATE TRIM COOLER

TYPE :
RATED DUTY :
SURFACE AREA :
SHELL DESIGN PRESS @ TEMP :
TUBE DESIGN PRESS @ TEMP :
MOC (SHELL / TUBES) :
TRIM (SHELL / TUBES) : VT-1500-035 A021-N
VT-1500-036 A021-N
INSULATION (SHELL / TUBES) :

GENERAL NOTES

A. FOR PIPING AND INSTRUMENTATION LEGENDS AND SYMBOLS, SEE P&IDs 0000-PID-0001 THRU 0000-PID-00XX.
B. INSTRUMENT NUMBERS ON THIS P&ID ARE PREFIXED BY THE UNIT NUMBER ASSOCIATED WITH THIS P&ID UNLESS OTHERWISE SPECIFIED.
C. CONTROL VALVES AND BYPASS SIZES ARE PRELIMINARY AND WILL BE CONFIRMED DURING DETAIL DESIGN.

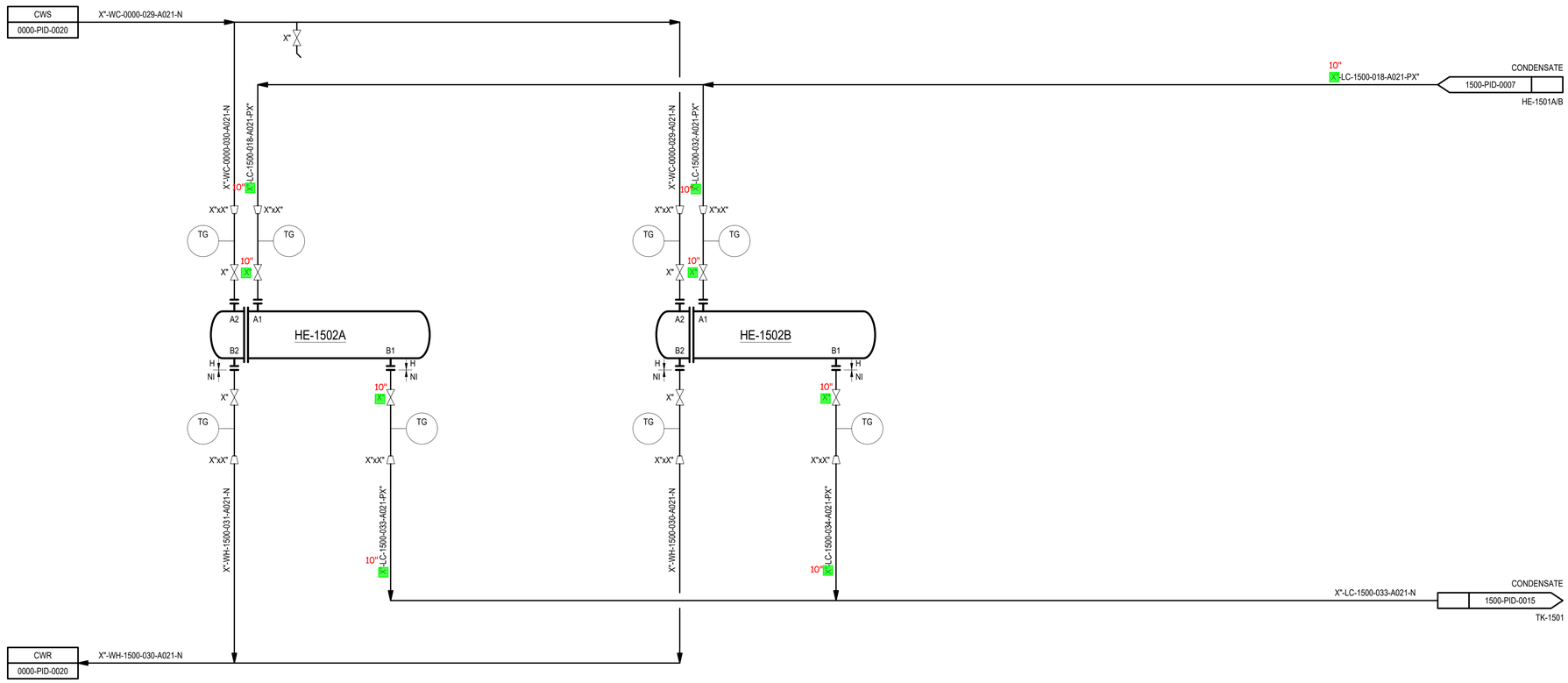

CHECK PRINT

NOT PUBLISHED. ALL RIGHTS RESERVED BY THE ENGINEER. DRAWINGS AND SPECIFICATIONS, AS INSTRUMENTS OF SERVICE, ARE ISSUED TO DESCRIBE DESIGN INTENT. THEY ARE NOT TO BE USED ON OTHER PROJECTS OR EXTENSIONS TO THIS PROJECT, EXCEPT BY AGREEMENT IN WRITING AND WITH APPROPRIATE COMPENSATION TO THE ENGINEER. CONTRACTOR, SUB-CONTRACTORS, & SUPPLIERS ARE RESPONSIBLE FOR CONFIRMING AND CORRELATING DIMENSIONS AND CONDITIONS AT THE JOB SITE, AND SHALL NOTIFY THE ENGINEER IMMEDIATELY OF ANY ERRORS OR DISCREPANCIES IN REGARD TO SUCH. DRAWINGS, DESCRIBING DESIGN INTENT, SHALL NOT INDICATE EVERY DETAIL OR SYSTEM FOR CONSTRUCTION. CONTRACTOR, SUB-CONTRACTORS, AND SUPPLIERS SHALL BE RESPONSIBLE TO PROVIDE ADDITIONAL DRAWINGS AS NECESSARY FOR PERMITS, ERECTION, INSTALLATION, AND CO-ORDINATION OF ALL WORK. CONTRACTOR, SUB-CONTRACTORS, AND SUPPLIERS SHALL BE RESPONSIBLE FOR ALL LABOR AND MATERIALS REQUIRED IN ACCORDANCE WITH DESIGN INTENT. ALL MATERIALS SHALL BE NEW. UNLESS SPECIFIED OTHERWISE, AND SHALL BE INSTALLED LEVEL, PLUMB, STRAIGHT, AND TRUE TO LINE, IN ACCORDANCE WITH THE BEST PRACTICES OF THE TRADES. THE ENGINEER SHALL NOT BE RESPONSIBLE FOR CONSTRUCTION MEANS, METHODS, TECHNIQUES, SEQUENCES OR PROCEDURES, OR FOR SAFETY PRECAUTIONS AND PROGRAMS IN CONNECTION WITH THE WORK. ALL WORK SHALL BE PERFORMED IN ACCORDANCE WITH APPLICABLE CODES AND ORDINANCES.

REFERENCE DRAWINGS:

REV #	DATE	DESCRIPTION	DRWN	CHKD	APVD
A	12-05-25	ISSUED FOR APPROVAL	GS	APB	PDN

REV #	DATE	DESCRIPTION	DRWN	CHKD	APVD

MOTIVA

CLIENT: MOTIVA ENTERPRISES LLC
PLANT: PORT ARTHUR REFINERY
JOB NO:

PROCESS FLOW DIAGRAM
PIPING & INSTRUMENTATION DIAGRAM
CONDENSATE SYSTEM
CONDENSATE TRIM COOLERS

PROJ TITLE: AROMATICS UTILITY SCOPE REVIEW

SSP ENGINEERING & CONSULTING
13100 NORTHWEST FREEWAY
SUITE 625,
HOUSTON, TEXAS 77040

FIRM NUMBER #13619

PROJECT NO: 25MA02	SCALE: NONE
DRAWN BY: GS	CHECKED: APB
DESIGN BY:	ENG APVL: PDN
DRAWING NO: 1500-PID-0011	REV A

DRAWING: 1500-pid-0011.dwg PLOTTED BY: jason PLOT DATE: ---- DRAWING LOCATION: c:\users\jason\onedrive - engineers files - 25ma02 - aromatics utility scope cold eyes review\04 - design\04 - process\pids (Border Rev1 5.16.25)

TK-1501

CONDENSATE TANK
SIZE ID x HEIGHT :
TOTAL VOLUME :
DESIGN PRESSURE :
DESIGN TEMP :
MOC :
TRIM : VT-1500-044-A021-N
INSULATION / TRACING :

GENERAL NOTES

A. FOR PIPING AND INSTRUMENTATION LEGENDS AND SYMBOLS, SEE P&IDs 0000-PID-0001 THRU 0000-PID-00XX.

B. INSTRUMENT NUMBERS ON THIS P&ID ARE PREFIXED BY THE UNIT NUMBER ASSOCIATED WITH THIS P&ID UNLESS OTHERWISE SPECIFIED.

C. CONTROL VALVES AND BYPASS SIZES ARE PRELIMINARY AND WILL BE CONFIRMED DURING DETAIL DESIGN.

NOTES

1. CONNECTION TO BYPASS TANK DURING TANK INSPECTION AND MAINTENANCE.

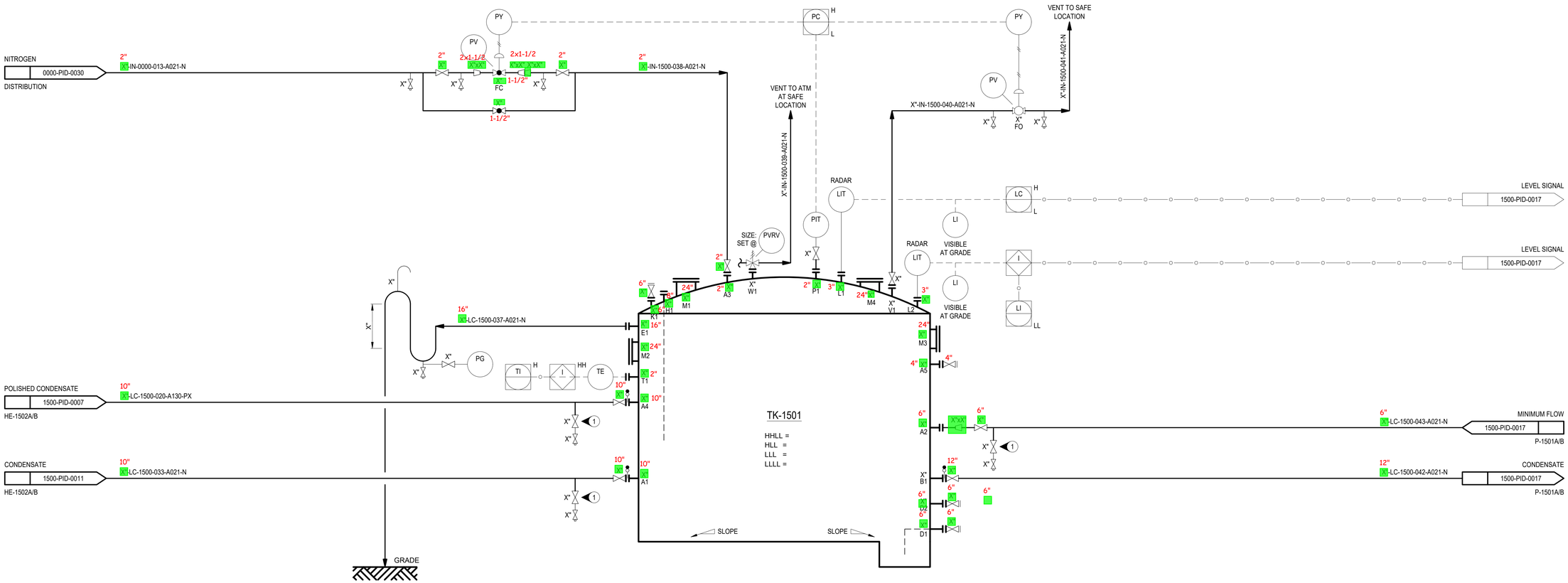

CHECK PRINT

NOT PUBLISHED, ALL RIGHTS RESERVED BY THE ENGINEER. DRAWINGS AND SPECIFICATIONS, AS INSTRUMENTS OF SERVICE, ARE ISSUED TO DESCRIBE DESIGN INTENT. THEY ARE NOT TO BE USED ON OTHER PROJECTS OR EXTENSIONS TO THIS PROJECT, EXCEPT BY AGREEMENT IN WRITING AND WITH APPROPRIATE COMPENSATION TO THE ENGINEER, CONTRACTOR, SUB-CONTRACTORS, & SUPPLIERS ARE RESPONSIBLE FOR CONFIRMING AND CORRELATING DIMENSIONS AND CONDITIONS AT THE JOB SITE, AND SHALL NOTIFY THE ENGINEER IMMEDIATELY OF ANY ERRORS OR DISCREPANCIES IN REGARD TO SUCH. DRAWINGS, DESCRIBING DESIGN INTENT, SHALL NOT INDICATE EVERY DETAIL OR SYSTEM FOR CONSTRUCTION. CONTRACTOR, SUB-CONTRACTORS, AND SUPPLIERS SHALL BE RESPONSIBLE TO PROVIDE ADDITIONAL DRAWINGS AS NECESSARY FOR PERMITS, ERECTION, INSTALLATION, AND CO-ORDINATION OF ALL WORK. CONTRACTOR, SUB-CONTRACTORS, AND SUPPLIERS SHALL BE RESPONSIBLE FOR ALL LABOR AND MATERIALS REQUIRED IN ACCORDANCE WITH DESIGN INTENT. ALL MATERIALS SHALL BE NEW, UNLESS SPECIFIED OTHERWISE, AND SHALL BE INSTALLED LEVEL, PLUMB, STRAIGHT, AND TRUE TO LINE, IN ACCORDANCE WITH THE BEST PRACTICES OF THE TRADES. THE ENGINEER SHALL NOT BE RESPONSIBLE FOR CONSTRUCTION MEANS, METHODS, TECHNIQUES, SEQUENCES OR PROCEDURES, OR FOR SAFETY PRECAUTIONS AND PROGRAMS IN CONNECTION WITH THE WORK. ALL WORK SHALL BE PERFORMED IN ACCORDANCE WITH APPLICABLE CODES AND ORDINANCES.

REFERENCE DRAWINGS:

REV #	DATE	DESCRIPTION	DRWN	CHKD	APVD
A	12-05-25	ISSUED FOR APPROVAL	GS	APB	PDN

REV #	DATE	DESCRIPTION	DRWN	CHKD	APVD

MOTIVA

CLIENT: MOTIVA ENTERPRISES LLC
PLANT: PORT ARTHUR REFINERY
JOB NO:

PIPING & INSTRUMENTATION DIAGRAM
CONDENSATE SYSTEM
CONDENSATE TANK

PROJ TITLE: AROMATICS UTILITY SCOPE REVIEW

SSP ENGINEERING & CONSULTING
13100 NORTHWEST FREEWAY
SUITE 625,
HOUSTON, TEXAS 77040

FIRM NUMBER #13619

PROJECT NO: 25MA02	SCALE: NONE
DRAWN BY: GS	CHECKED: APB
DESIGN BY:	ENG APVL: PDN
DRAWING NO: 1500-PID-0015	REV A

DRAWING: 1500-pid-0015.dwg PLOTTED BY: jason. PLOT DATE: ---- DRAWING LOCATION: c:\users\jason\onedrive - engineip's files - 25ma02 - aromatics utility scope cold eyes review\04 - design\04 - process\pids, (Border Rev1 5.16.25)

P-1501A/B

CONDENSATE PUMPS
RATED CAPACITY :
DIFFERENTIAL PRESSURE :
RATED POWER :
MOC (CASING / INTERNAL) :
INSULATION / TRACING :
TRIM : VT-1500-049-A021-N
SEAL PLAN :

GENERAL NOTES

A. FOR PIPING AND INSTRUMENTATION LEGENDS AND SYMBOLS, SEE P&IDs 0000-PID-0001 THRU 0000-PID-00XX.

B. INSTRUMENT NUMBERS ON THIS P&ID ARE PREFIXED BY THE UNIT NUMBER ASSOCIATED WITH THIS P&ID UNLESS OTHERWISE SPECIFIED.

C. CONTROL VALVES AND BYPASS SIZES ARE PRELIMINARY AND WILL BE CONFIRMED DURING DETAIL DESIGN.

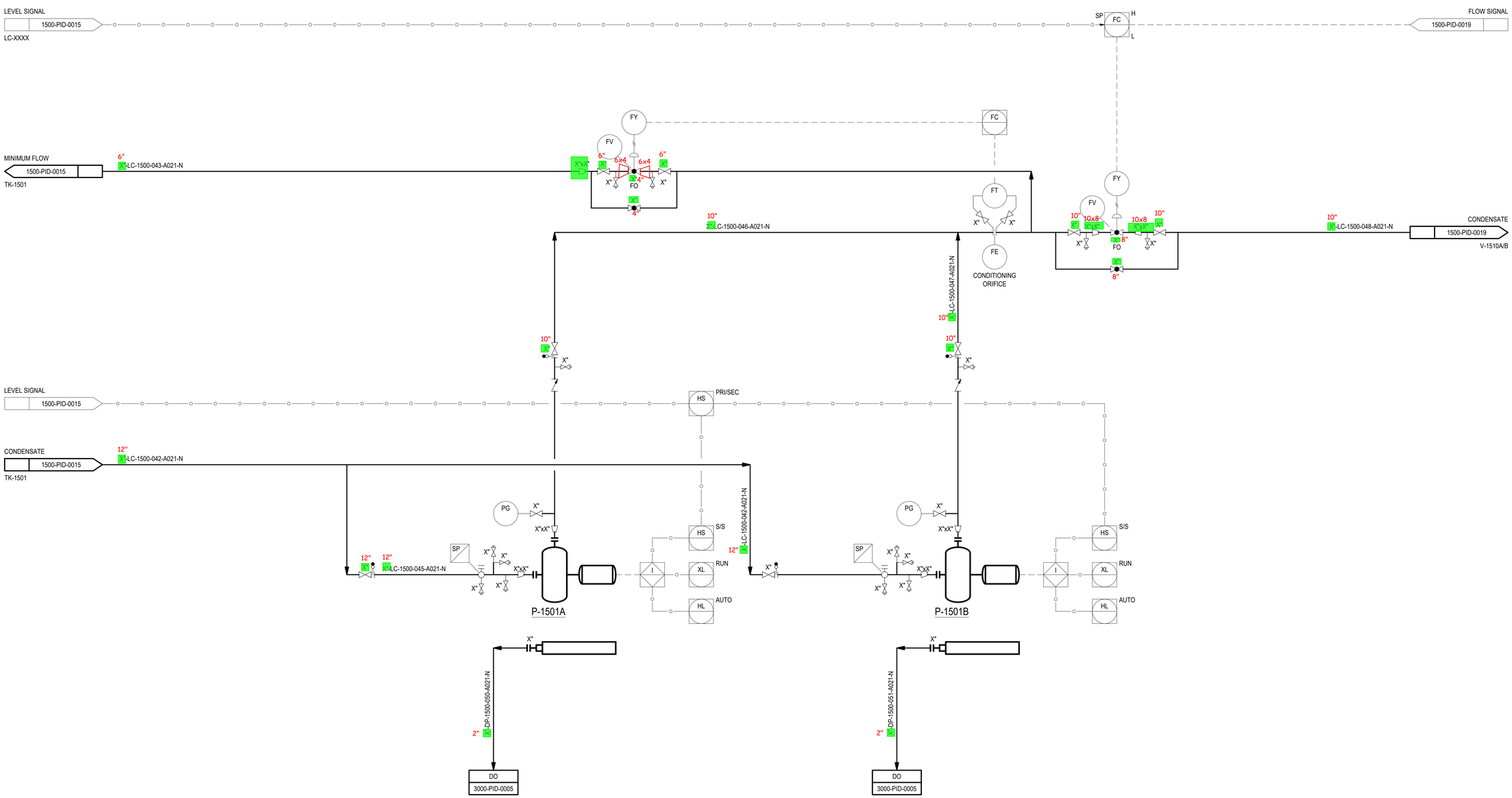

CHECK PRINT

NOT PUBLISHED, ALL RIGHTS RESERVED BY THE ENGINEER. DRAWINGS AND SPECIFICATIONS, AS INSTRUMENTS OF SERVICE, ARE ISSUED TO DESCRIBE DESIGN INTENT. THEY ARE NOT TO BE USED ON OTHER PROJECTS OR EXTENSIONS TO THIS PROJECT, EXCEPT BY AGREEMENT IN WRITING AND WITH APPROPRIATE COMPENSATION TO THE ENGINEER. CONTRACTOR, SUB-CONTRACTORS, & SUPPLIERS ARE RESPONSIBLE FOR CONFIRMING AND CORRELATING DIMENSIONS AND CONDITIONS AT THE JOB SITE, AND SHALL NOTIFY THE ENGINEER IMMEDIATELY OF ANY ERRORS OR DISCREPANCIES IN REGARD TO SUCH DRAWINGS. DESCRIBING DESIGN INTENT, SHALL NOT INDICATE EVERY DETAIL OR SYSTEM FOR CONSTRUCTION. CONTRACTOR, SUB-CONTRACTORS, AND SUPPLIERS SHALL BE RESPONSIBLE TO PROVIDE ADDITIONAL DRAWINGS AS NECESSARY FOR PERMITS, ERECTION, INSTALLATION, AND CO-ORDINATION OF ALL WORK. CONTRACTOR, SUB-CONTRACTORS, AND SUPPLIERS SHALL BE RESPONSIBLE FOR ALL LABOR AND MATERIALS REQUIRED IN ACCORDANCE WITH DESIGN INTENT. ALL MATERIALS SHALL BE NEW, UNLESS SPECIFIED OTHERWISE, AND SHALL BE INSTALLED LEVEL, PLUMB, STRAIGHT, AND TRUE TO LINE, IN ACCORDANCE WITH THE BEST PRACTICES OF THE TRADES. THE ENGINEER SHALL NOT BE RESPONSIBLE FOR CONSTRUCTION MEANS, METHODS, TECHNIQUES, SEQUENCES OR PROCEDURES, OR FOR SAFETY PRECAUTIONS AND PROGRAMS IN CONNECTION WITH THE WORK. ALL WORK SHALL BE PERFORMED IN ACCORDANCE WITH APPLICABLE CODES AND ORDINANCES.

REFERENCE DRAWINGS:

REV #	DATE	DESCRIPTION	DRWN	CHKD	APVD
A	12-05-25	ISSUED FOR APPROVAL	GS	APB	PDN

REV #	DATE	DESCRIPTION	DRWN	CHKD	APVD

MOTIVA

CLIENT: MOTIVA ENTERPRISES LLC
PLANT: PORT ARTHUR REFINERY
JOB NO:

PIPING & INSTRUMENTATION DIAGRAM
CONDENSATE SYSTEM
CONDENSATE PUMPS

PROJ TITLE: AROMATICS UTILITY SCOPE REVIEW

SSP ENGINEERING & CONSULTING
13100 NORTHWEST FREEWAY
SUITE 625,
HOUSTON, TEXAS 77040

FIRM NUMBER #13619

PROJECT NO: 25MA02	SCALE: NONE
DRAWN BY: GS	CHECKED: APB
DESIGN BY:	ENG APVL: PDN
DRAWING NO: 1500-PID-0017	REV A

DRAWING: 1500-pid-0017.dwg PLOTTED BY: jason PLOT DATE: ---- DRAWING LOCATION: c:\users\jasonr\onedrive - engineer's files - 25ma02 - aromatics utility scope cold eyes review\04 - design\04 - process\pids (Border Rev1 5.16.25)

V-1510A/B

ACTIVATED CARBON FILTERS
SIZE :
TOTAL VOLUME :
DESIGN PRESSURE :
DESIGN TEMP :
MOC :
TRIM : VT-1500-055-A021-N
INSULATION / TRACING :

GENERAL NOTES

A. FOR PIPING AND INSTRUMENTATION LEGENDS AND SYMBOLS, SEE P&IDs 0000-PID-0001 THRU 0000-PID-00XX.
B. INSTRUMENT NUMBERS ON THIS P&ID ARE PREFIXED BY THE UNIT NUMBER ASSOCIATED WITH THIS P&ID UNLESS OTHERWISE SPECIFIED.
C. CONTROL VALVES AND BYPASS SIZES ARE PRELIMINARY AND WILL BE CONFIRMED DURING DETAIL DESIGN.

NOTES

1. SELECTOR SWITCH FOR SELECTING BETWEEN ACF V-1510A AND V-1510B.
2. CARBON FILTERS SHOWN ARE TYPICAL. CONFIGURATION WILL BE REVISED ONCE SYSTEM IS SELECTED.

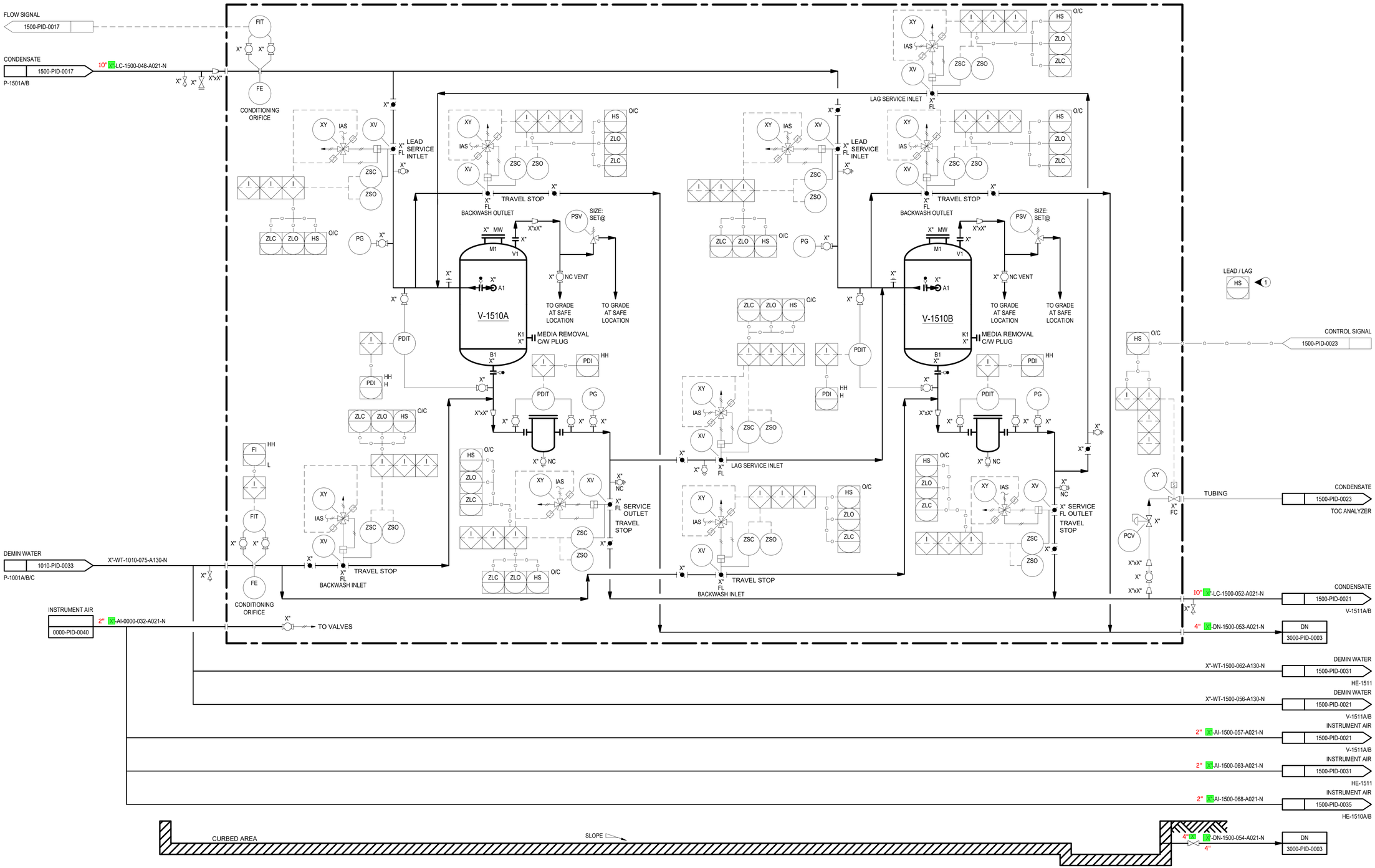

CHECK PRINT

NOT PUBLISHED, ALL RIGHTS RESERVED BY THE ENGINEER. DRAWINGS AND SPECIFICATIONS, AS INSTRUMENTS OF SERVICE, ARE ISSUED TO DESCRIBE DESIGN INTENT. THEY ARE NOT TO BE USED ON OTHER PROJECTS OR EXTENSIONS TO THIS PROJECT, EXCEPT BY AGREEMENT IN WRITING AND WITH APPROPRIATE COMPENSATION TO THE ENGINEER. CONTRACTOR, SUB-CONTRACTORS, & SUPPLIERS ARE RESPONSIBLE FOR CONFIRMING AND CORRELATING DIMENSIONS AND CONDITIONS AT THE JOB SITE, AND SHALL NOTIFY THE ENGINEER IMMEDIATELY OF ANY ERRORS OR DISCREPANCIES IN REGARD TO SUCH DRAWINGS, DESCRIBING DESIGN INTENT, SHALL NOT INDICATE EVERY DETAIL OR SYSTEM FOR CONSTRUCTION. CONTRACTOR, SUB-CONTRACTORS, AND SUPPLIERS SHALL BE RESPONSIBLE TO PROVIDE ADDITIONAL DRAWINGS AS NECESSARY FOR PERMITS, ERECTION, INSTALLATION, AND CO-ORDINATION OF ALL WORK. CONTRACTOR, SUB-CONTRACTORS, AND SUPPLIERS SHALL BE RESPONSIBLE FOR ALL LABOR AND MATERIALS REQUIRED IN ACCORDANCE WITH DESIGN INTENT. ALL MATERIALS SHALL BE NEW, UNLESS SPECIFIED OTHERWISE, AND SHALL BE INSTALLED LEVEL, PLUMB, STRAIGHT, AND TRUE TO LINE, IN ACCORDANCE WITH THE BEST PRACTICES OF THE TRADES. THE ENGINEER SHALL NOT BE RESPONSIBLE FOR CONSTRUCTION MEANS, METHODS, TECHNIQUES, SEQUENCES OR PROCEDURES, OR FOR SAFETY PRECAUTIONS AND PROGRAMS IN CONNECTION WITH THE WORK. ALL WORK SHALL BE PERFORMED IN ACCORDANCE WITH APPLICABLE CODES AND ORDINANCES.

REFERENCE DRAWINGS:

REV #	DATE	DESCRIPTION	DRWN	CHKD	APVD
A	12-05-25	ISSUED FOR APPROVAL	GS	APB	PDN

REV #	DATE	DESCRIPTION	DRWN	CHKD	APVD

MOTIVA

CLIENT: MOTIVA ENTERPRISES LLC
PLANT: PORT ARTHUR REFINERY
JOB NO:

PIPING & INSTRUMENTATION DIAGRAM
CONDENSATE POLISHING PACKAGE
ACTIVATED CARBON FILTERS

PROJ TITLE: AROMATICS UTILITY SCOPE REVIEW

SSP ENGINEERING & CONSULTING
13100 NORTHWEST FREEWAY
SUITE 625,
HOUSTON, TEXAS 77040

FIRM NUMBER #13619

PROJECT NO: 25MA02	SCALE: NONE
DRAWN BY: GS	CHECKED: APB
DESIGN BY:	ENG APVL: PDN
DRAWING NO: 1500-PID-0019	REV A

DRAWING: 1500-pid-0019.dwg PLOTTED BY: jason PLOT DATE: ---- DRAWING LOCATION: c:\users\jasononeidrive - eng\ssp's files - 25ma02 - aromatics utility scope cold eyes review\04 - design\04 - process\pids (Border Rev1 5.16.25)

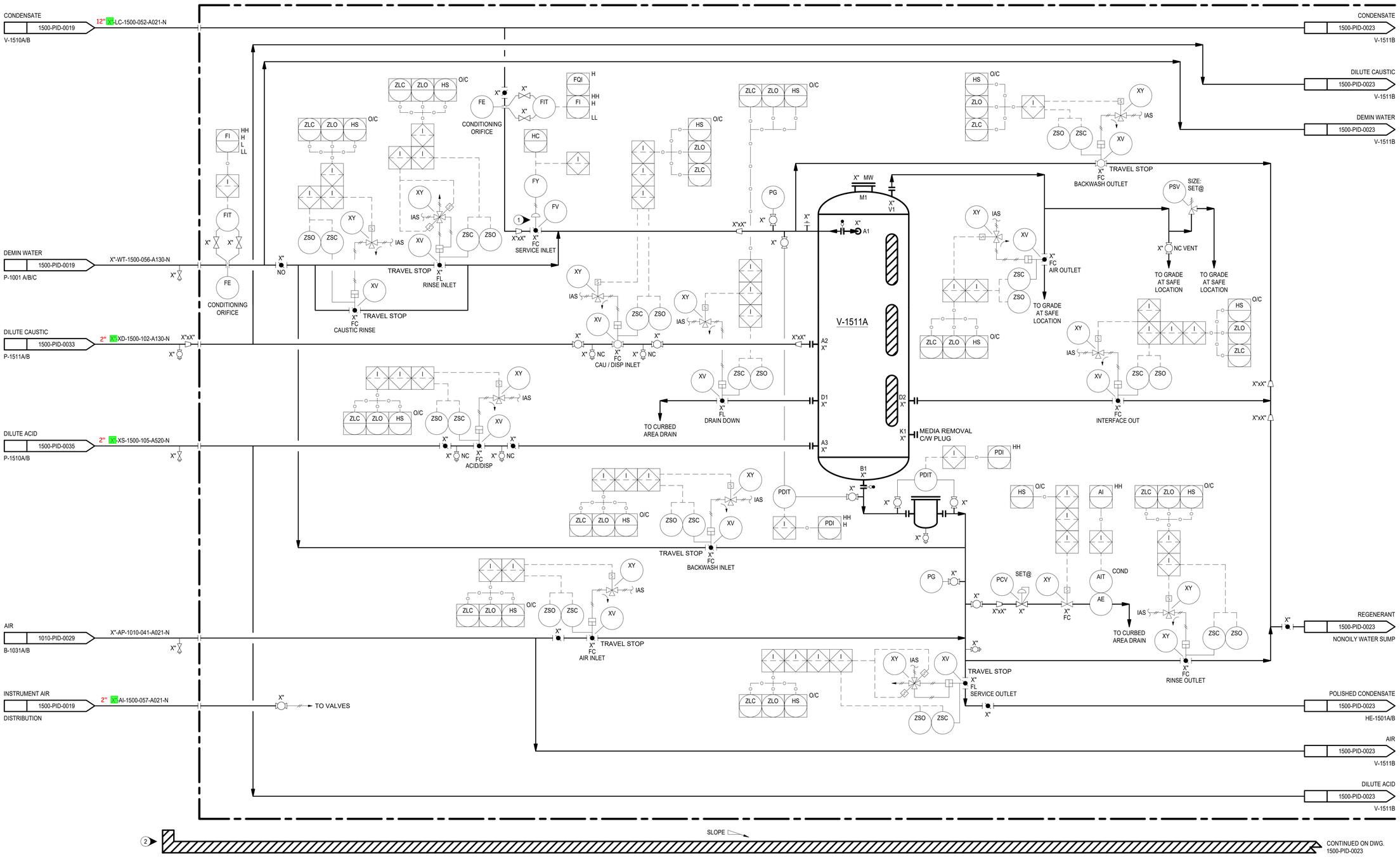

GENERAL NOTES

A. FOR PIPING AND INSTRUMENTATION LEGENDS AND SYMBOLS, SEE P&IDs 0000-PID-0001 THRU 0000-PID-00XX.

B. INSTRUMENT NUMBERS ON THIS P&ID ARE PREFIXED BY THE UNIT NUMBER ASSOCIATED WITH THIS P&ID UNLESS OTHERWISE SPECIFIED.

C. CONTROL VALVES AND BYPASS SIZES ARE PRELIMINARY AND WILL BE CONFIRMED DURING DETAIL DESIGN.

NOTES

1. FV-XXXX APPLY AS AN ON/OFF VALVE AND HC-XXXX IS MANUAL SET TO FULLY OPEN OR CLOSE THE VALVE.
2. COMMON CURBED AREA FOR MIXED BED POLISHER TRAIN 1 AND 2. ACID AND CAUSTIC RESISTANT LINING.
3. CONDENSATE POLISHER SHOWN IS TYPICAL. CONFIGURATION WILL BE REVISED ONCE SYSTEM IS SELECTED.

CHECK PRINT

NOT PUBLISHED, ALL RIGHTS RESERVED BY THE ENGINEER. DRAWINGS AND SPECIFICATIONS, AS INSTRUMENTS OF SERVICE, ARE ISSUED TO DESCRIBE DESIGN INTENT. THEY ARE NOT TO BE USED ON OTHER PROJECTS OR EXTENSIONS TO THIS PROJECT, EXCEPT BY AGREEMENT IN WRITING AND WITH APPROPRIATE COMPENSATION TO THE ENGINEER. CONTRACTOR, SUB-CONTRACTORS, & SUPPLIERS ARE RESPONSIBLE FOR CONFIRMING AND CORRELATING DIMENSIONS AND CONDITIONS AT THE JOB SITE, AND SHALL NOTIFY THE ENGINEER IMMEDIATELY OF ANY ERRORS OR DISCREPANCIES IN REGARD TO SUCH. DRAWINGS, DESCRIBING DESIGN INTENT, SHALL NOT INDICATE EVERY DETAIL OR SYSTEM FOR CONSTRUCTION. CONTRACTOR, SUB-CONTRACTORS, AND SUPPLIERS SHALL BE RESPONSIBLE TO PROVIDE ADDITIONAL DRAWINGS AS NECESSARY FOR PERMITS, ERECTION, INSTALLATION, AND CO-ORDINATION OF ALL WORK. CONTRACTOR, SUB-CONTRACTORS, AND SUPPLIERS SHALL BE RESPONSIBLE FOR ALL LABOR AND MATERIALS REQUIRED IN ACCORDANCE WITH DESIGN INTENT. ALL MATERIALS SHALL BE NEW, UNLESS SPECIFIED OTHERWISE, AND SHALL BE INSTALLED LEVEL, PLUMB, STRAIGHT, AND TRUE TO LINE, IN ACCORDANCE WITH THE BEST PRACTICES OF THE TRADES. THE ENGINEER SHALL NOT BE RESPONSIBLE FOR CONSTRUCTION MEANS, METHODS, TECHNIQUES, SEQUENCES OR PROCEDURES, OR FOR SAFETY PRECAUTIONS AND PROGRAMS IN CONNECTION WITH THE WORK. ALL WORK SHALL BE PERFORMED IN ACCORDANCE WITH APPLICABLE CODES AND ORDINANCES.

REFERENCE DRAWINGS:

REV #	DATE	DESCRIPTION	DRWN	CHKD	APVD
A	12-05-25	ISSUED FOR APPROVAL	GS	APB	PDN

REV #	DATE	DESCRIPTION	DRWN	CHKD	APVD

MOTIVA

CLIENT: MOTIVA ENTERPRISES LLC
PLANT: PORT ARTHUR REFINERY
JOB NO:

PIPING & INSTRUMENTATION DIAGRAM

CONDENSATE POLISHING PACKAGE
CONDENSATE POLISHER A

PROJ TITLE: AROMATICS UTILITY SCOPE REVIEW

SSP ENGINEERING & CONSULTING
13100 NORTHWEST FREEWAY
SUITE 625,
HOUSTON, TEXAS 77040

FIRM NUMBER #13619

PROJECT NO: 25MA02	SCALE: NONE
DRAWN BY: GS	CHECKED: APB
DESIGN BY:	ENG APVL: PDN
DRAWING NO: 1500-PID-0021	REV A

DRAWING: 1500-pid-0021.dwg PLOTTED BY: jason PLOT DATE: ---- DRAWING LOCATION: C:\users\jason\onedrive - engineer's files - 25ma02 - aromatics utility scope cold eyes review\04 - design\04 - process\pids, (Border Rev1 5.16.25)

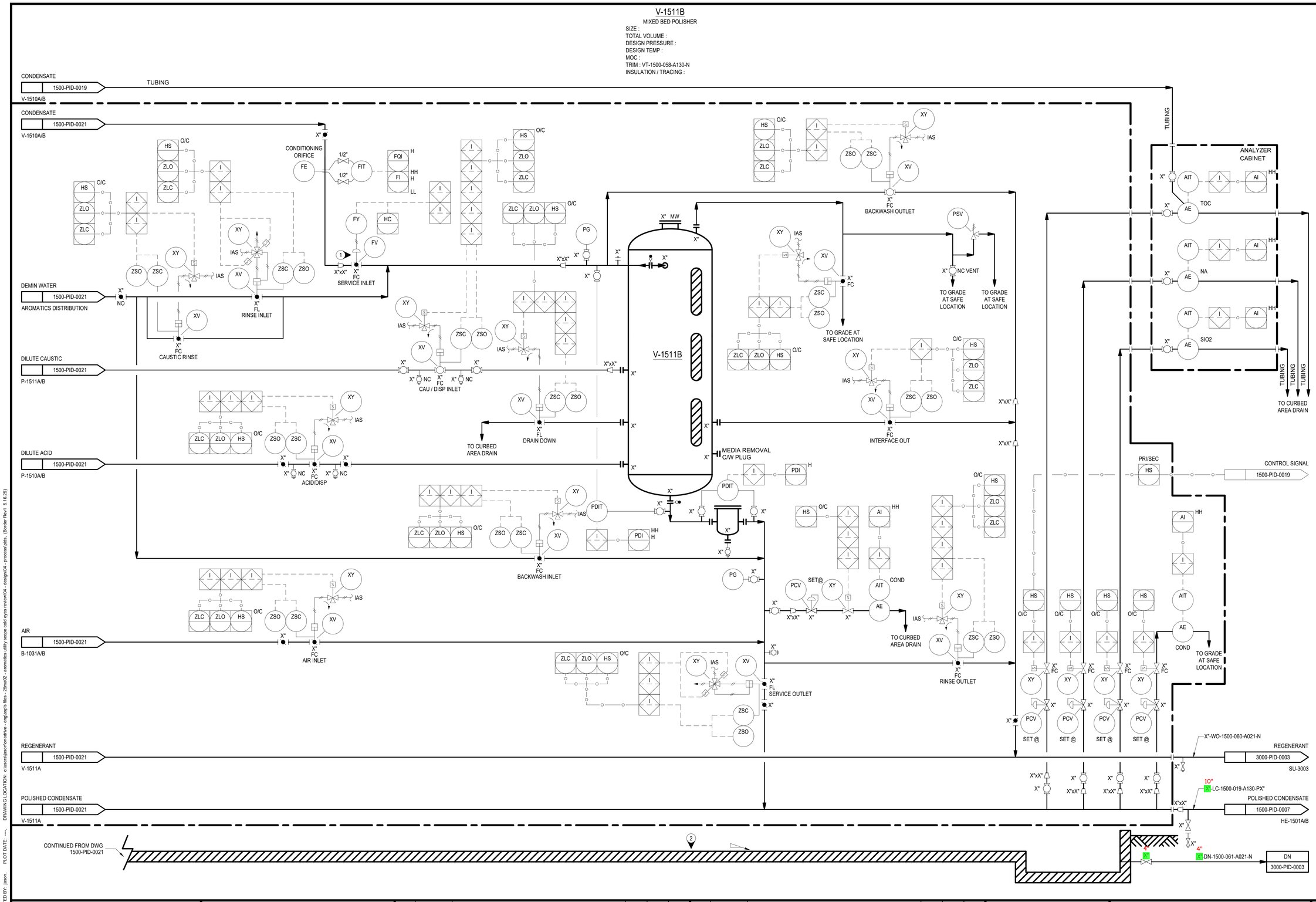

GENERAL NOTES

A. FOR PIPING AND INSTRUMENTATION LEGENDS AND SYMBOLS, SEE P&IDs 0000-PID-0001 THRU 0000-PID-00XX.

B. INSTRUMENT NUMBERS ON THIS P&ID ARE PREFIXED BY THE UNIT NUMBER ASSOCIATED WITH THIS P&ID UNLESS OTHERWISE SPECIFIED.

C. CONTROL VALVES AND BYPASS SIZES ARE PRELIMINARY AND WILL BE CONFIRMED DURING DETAIL DESIGN.

NOTES

1. FV-XXXX APPLY AS AN ON/OFF VALVE AND HC-XXXX IS MANUAL SET TO FULLY OPEN OR CLOSE THE VALVE.
2. COMMON CURBED AREA FOR MIXED BED POLISHER TRAIN 1 AND 2. PROVIDE ACID AND CAUSTIC RESISTANT LINING.
3. CONDENSATE POLISHER SHOWN IS TYPICAL. CONFIGURATION WILL BE REVISED ONCE SYSTEM IS SELECTED.

CHECK PRINT

NOT PUBLISHED, ALL RIGHTS RESERVED BY THE ENGINEER. DRAWINGS AND SPECIFICATIONS, AS INSTRUMENTS OF SERVICE, ARE ISSUED TO DESCRIBE DESIGN INTENT. THEY ARE NOT TO BE USED ON OTHER PROJECTS OR EXTENSIONS TO THIS PROJECT, EXCEPT BY AGREEMENT IN WRITING AND WITH APPROPRIATE COMPENSATION TO THE ENGINEER. CONTRACTOR, SUB-CONTRACTORS, & SUPPLIERS ARE RESPONSIBLE FOR CONFIRMING AND CORRELATING DIMENSIONS AND CONDITIONS AT THE JOB SITE, AND SHALL NOTIFY THE ENGINEER IMMEDIATELY OF ANY ERRORS OR DISCREPANCIES IN REGARD TO SUCH DRAWINGS. DESCRIBING DESIGN INTENT, SHALL NOT INDICATE EVERY DETAIL OR SYSTEM FOR CONSTRUCTION. CONTRACTOR, SUB-CONTRACTORS, AND SUPPLIERS SHALL BE RESPONSIBLE TO PROVIDE ADDITIONAL DRAWINGS AS NECESSARY FOR PERMITS, ERECTION, INSTALLATION, AND CO-ORDINATION OF ALL WORK. CONTRACTOR, SUB-CONTRACTORS, AND SUPPLIERS SHALL BE RESPONSIBLE FOR ALL LABOR AND MATERIALS REQUIRED IN ACCORDANCE WITH DESIGN INTENT. ALL MATERIALS SHALL BE NEW, UNLESS SPECIFIED OTHERWISE, AND SHALL BE INSTALLED LEVEL, PLUMB, STRAIGHT, AND TRUE TO LINE, IN ACCORDANCE WITH THE BEST PRACTICES OF THE TRADES. THE ENGINEER SHALL NOT BE RESPONSIBLE FOR CONSTRUCTION MEANS, METHODS, TECHNIQUES, SEQUENCES OR PROCEDURES, OR FOR SAFETY PRECAUTIONS AND PROGRAMS IN CONNECTION WITH THE WORK. ALL WORK SHALL BE PERFORMED IN ACCORDANCE WITH APPLICABLE CODES AND ORDINANCES.

REFERENCE DRAWINGS:

REV #	DATE	DESCRIPTION	DRWN	CHKD	APVD
A	12-05-25	ISSUED FOR APPROVAL	GS	APB	PDN

REV #	DATE	DESCRIPTION	DRWN	CHKD	APVD

MOTIVA

CLIENT: MOTIVA ENTERPRISES LLC
PLANT: PORT ARTHUR REFINERY
JOB NO:

PIPING & INSTRUMENTATION DIAGRAM

CONDENSATE POLISHING PACKAGE
MIXED BED POLISHER B

PROJ TITLE: AROMATICS UTILITY SCOPE REVIEW

SSP ENGINEERING & CONSULTING
13100 NORTHWEST FREEWAY
SUITE 625,
HOUSTON, TEXAS 77040

FIRM NUMBER #13619

PROJECT NO: 25MA02	SCALE: NONE
DRAWN BY: GS	CHECKED: APB
DESIGN BY:	ENG APVL: PDN
DRAWING NO: 1500-PID-0023	REV A

DRAWING: 1500-pid-0023.dwg PLOTTED BY: jason. PLOT DATE: ---- DRAWING LOCATION: C:\users\jason\onedrive - engineer's files - 25ma02 - aromatics utility scope cold eyes review\04 - design\04 - process\pids, (Border Rev1 5.16.25)

HE-1511

CONDENSATE CAUSTIC DILUTION HEATER
TYPE :
RATED DUTY :
SURFACE AREA :
SHELL DESIGN PRESS @ TEMP :
TUBE DESIGN PRESS @ TEMP :
MOC (SHELL / TUBES) :
TRIM (SHELL / TUBES) : VT-1500-065 A021-HX"
VT-1500-066 A130-PX"
INSULATION (SHELL / TUBES) :

GENERAL NOTES

A. FOR PIPING AND INSTRUMENTATION LEGENDS AND SYMBOLS, SEE P&IDs 0000-PID-0001 THRU 0000-PID-00XX.
B. INSTRUMENT NUMBERS ON THIS P&ID ARE PREFIXED BY THE UNIT NUMBER ASSOCIATED WITH THIS P&ID UNLESS OTHERWISE SPECIFIED.
C. CONTROL VALVES AND BYPASS SIZES ARE PRELIMINARY AND WILL BE CONFIRMED DURING DETAIL DESIGN.

NOTES

1. COMMON CURBED AREA FOR DEMIN CAUSTIC DILUTION SKID 1 (DRAWING XXXX-PID-XXXX), AND CONDENSATE POLISHING PACKAGE CAUSTIC DILUTION SKID.
2. CAUSTIC RESISTANT LINING.

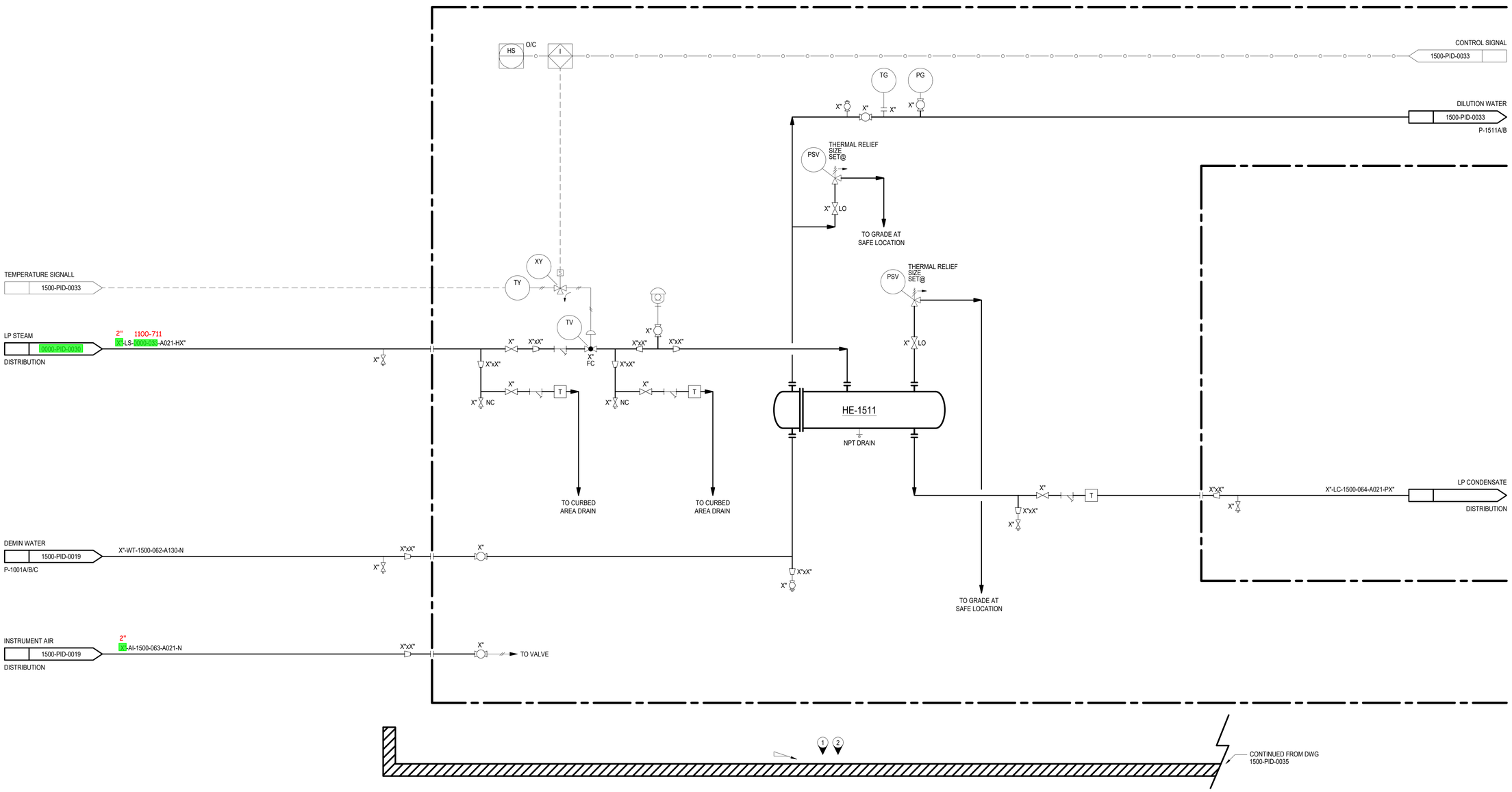

CHECK PRINT

NOT PUBLISHED. ALL RIGHTS RESERVED BY THE ENGINEER. DRAWINGS AND SPECIFICATIONS, AS INSTRUMENTS OF SERVICE, ARE ISSUED TO DESCRIBE DESIGN INTENT. THEY ARE NOT TO BE USED ON OTHER PROJECTS OR EXTENSIONS TO THIS PROJECT, EXCEPT BY AGREEMENT IN WRITING AND WITH APPROPRIATE COMPENSATION TO THE ENGINEER. CONTRACTOR, SUB-CONTRACTORS, & SUPPLIERS ARE RESPONSIBLE FOR CONFIRMING AND CORRELATING DIMENSIONS AND CONDITIONS AT THE JOB SITE, AND SHALL NOTIFY THE ENGINEER IMMEDIATELY OF ANY ERRORS OR DISCREPANCIES IN REGARD TO SUCH. DRAWINGS, DESCRIBING DESIGN INTENT, SHALL NOT INDICATE EVERY DETAIL OR SYSTEM FOR CONSTRUCTION. CONTRACTOR, SUB-CONTRACTORS, AND SUPPLIERS SHALL BE RESPONSIBLE TO PROVIDE ADDITIONAL DRAWINGS AS NECESSARY FOR PERMITS, ERECTION, INSTALLATION, AND CO-ORDINATION OF ALL WORK. CONTRACTOR, SUB-CONTRACTORS, AND SUPPLIERS SHALL BE RESPONSIBLE FOR ALL LABOR AND MATERIALS REQUIRED IN ACCORDANCE WITH DESIGN INTENT. ALL MATERIALS SHALL BE NEW, UNLESS SPECIFIED OTHERWISE, AND SHALL BE INSTALLED LEVEL, PLUMB, STRAIGHT, AND TRUE TO LINE, IN ACCORDANCE WITH THE BEST PRACTICES OF THE TRADES. THE ENGINEER SHALL NOT BE RESPONSIBLE FOR CONSTRUCTION MEANS, METHODS, TECHNIQUES, SEQUENCES OR PROCEDURES, OR FOR SAFETY PRECAUTIONS AND PROGRAMS IN CONNECTION WITH THE WORK. ALL WORK SHALL BE PERFORMED IN ACCORDANCE WITH APPLICABLE CODES AND ORDINANCES.

REFERENCE DRAWINGS:

REV #	DATE	DESCRIPTION	DRWN	CHKD	APVD
A	12-05-25	ISSUED FOR APPROVAL	GS	APB	PDN

REV #	DATE	DESCRIPTION	DRWN	CHKD	APVD

MOTIVA

CLIENT: MOTIVA ENTERPRISES LLC
PLANT: PORT ARTHUR REFINERY
JOB NO:

PROCESS FLOW DIAGRAM
PIPING & INSTRUMENTATION DIAGRAM
CONDENSATE POLISHING PACKAGE
CONDENSATE CAUSTIC DILUTION HEATER

PROJ TITLE: AROMATICS UTILITY SCOPE REVIEW

SSP ENGINEERING & CONSULTING
13100 NORTHWEST FREEWAY
SUITE 625,
HOUSTON, TEXAS 77040

FIRM NUMBER #13619

PROJECT NO: 25MA02	SCALE: NONE
DRAWN BY: GS	CHECKED: APB
DESIGN BY:	ENG APVL: PDN
DRAWING NO: 1500-PID-0031	REV A

DRAWING: 1500-pid-0031.dwg PLOTTED BY: jason PLOT DATE: ---- DRAWING LOCATION: c:\users\jason\onedrive - engineering's files - 25ma02 - aromatics utility scope cold eyes review\04 - design\04 - process\pids_(Border Rev1 5.16.25)

P-1511A/B

CAUSTIC DOSING PUMPS
RATED CAPACITY :
DIFFERENTIAL PRESSURE :
RATED POWER :
MOC (CASING / INTERNAL) :
INSULATION / TRACING :
TRIM : VT-1500-067-A130-N
SEAL PLAN :

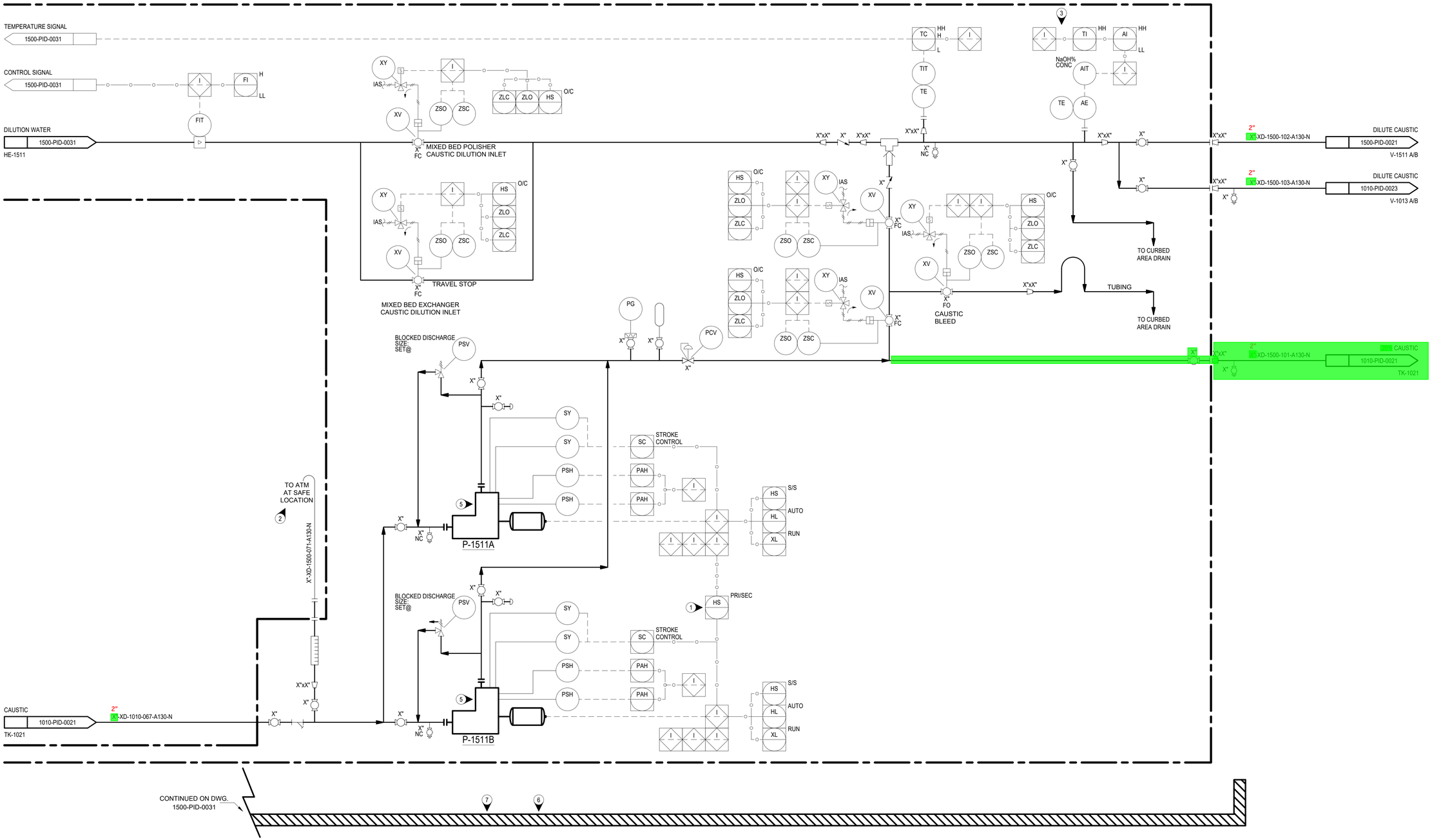

GENERAL NOTES

A. FOR PIPING AND INSTRUMENTATION LEGENDS AND SYMBOLS, SEE P&IDs 0000-PID-0001 THRU 0000-PID-00XX.

B. INSTRUMENT NUMBERS ON THIS P&ID ARE PREFIXED BY THE UNIT NUMBER ASSOCIATED WITH THIS P&ID UNLESS OTHERWISE SPECIFIED.

C. CONTROL VALVES AND BYPASS SIZES ARE PRELIMINARY AND WILL BE CONFIRMED DURING DETAIL DESIGN.

NOTES

1. DOSING PUMPS ALTERNATE DUTY AFTER EACH USE.
2. CALIBRATION COLUMN VENT IS EXTENDED TO A HEIGHT ABOVE THE MAXIMUM TANK ELEVATION.
3. INTEGRAL TEMPERATURE ANALOG SIGNAL IN ANALYZER.
4. ALL MOTOR DRIVEN EQUIPMENT PROVIDED WITH A 3 POSITION START/ RUN/ STOP SWITCH. SPRING RETURN FROM START TO RUN, MAINTAIN STOP.
5. CHECK VALVES INTERNAL TO THE PUMP.
6. COMMON CURBED AREA FOR DEMIN CAUSTIC DILUTION SYSTEM AND CONDENSATE POLISHING PACKAGE CAUSTIC DOSING PUMPS AND CONDENSATE CAUSTIC DILUTION HEATER.
7. CAUSTIC RESISTANT LINING.

CHECK PRINT

NOT PUBLISHED, ALL RIGHTS RESERVED BY THE ENGINEER. DRAWINGS AND SPECIFICATIONS, AS INSTRUMENTS OF SERVICE, ARE ISSUED TO DESCRIBE DESIGN INTENT. THEY ARE NOT TO BE USED ON OTHER PROJECTS OR EXTENSIONS TO THIS PROJECT, EXCEPT BY AGREEMENT IN WRITING AND WITH APPROPRIATE COMPENSATION TO THE ENGINEER. CONTRACTOR, SUB-CONTRACTORS, & SUPPLIERS ARE RESPONSIBLE FOR CONFIRMING AND CORRELATING DIMENSIONS AND CONDITIONS AT THE JOB SITE, AND SHALL NOTIFY THE ENGINEER IMMEDIATELY OF ANY ERRORS OR DISCREPANCIES IN REGARD TO SUCH. DRAWINGS, DESCRIBING DESIGN INTENT, SHALL NOT INDICATE EVERY DETAIL OR SYSTEM FOR CONSTRUCTION. CONTRACTOR, SUB-CONTRACTORS, AND SUPPLIERS SHALL BE RESPONSIBLE TO PROVIDE ADDITIONAL DRAWINGS AS NECESSARY FOR PERMITS, ERECTION, INSTALLATION, AND CO-ORDINATION OF ALL WORK. CONTRACTOR, SUB-CONTRACTORS, AND SUPPLIERS SHALL BE RESPONSIBLE FOR ALL LABOR AND MATERIALS REQUIRED IN ACCORDANCE WITH DESIGN INTENT. ALL MATERIALS SHALL BE NEW, UNLESS SPECIFIED OTHERWISE, AND SHALL BE INSTALLED LEVEL, PLUMB, STRAIGHT, AND TRUE TO LINE, IN ACCORDANCE WITH THE BEST PRACTICES OF THE TRADES. THE ENGINEER SHALL NOT BE RESPONSIBLE FOR CONSTRUCTION MEANS, METHODS, TECHNIQUES, SEQUENCES OR PROCEDURES, OR FOR SAFETY PRECAUTIONS AND PROGRAMS IN CONNECTION WITH THE WORK. ALL WORK SHALL BE PERFORMED IN ACCORDANCE WITH APPLICABLE CODES AND ORDINANCES.

REFERENCE DRAWINGS:

REV #	DATE	DESCRIPTION	DRWN	CHKD	APVD
A	12-05-25	ISSUED FOR APPROVAL	GS	APB	PDN

REV #	DATE	DESCRIPTION	DRWN	CHKD	APVD

MOTIVA

CLIENT: MOTIVA ENTERPRISES LLC
PLANT: PORT ARTHUR REFINERY
JOB NO:

PIPING & INSTRUMENTATION DIAGRAM
CONDENSATE POLISHING PACKAGE
CAUSTIC DOSING PUMPS

PROJ TITLE: AROMATICS UTILITY SCOPE REVIEW

SSP ENGINEERING & CONSULTING
13100 NORTHWEST FREEWAY
SUITE 625,
HOUSTON, TEXAS 77040

FIRM NUMBER #13619

PROJECT NO: 25MA02	SCALE: NONE
DRAWN BY: GS	CHECKED: APB
DESIGN BY:	ENG APVL: PDN
DRAWING NO: 1500-PID-0033	REV A

DRAWING: 1500-pid-0033.dwg PLOTTED BY: jason PLOT DATE: ---- DRAWING LOCATION: c:\users\jason\onedrive - engineip's files - 25ma02 - aromatics utility scope cold eyes review\04 - design\04 - process\pids, (Border Rev1 5.16.25)

P-1510A/B

SULFURIC ACID DOSING PUMPS
RATED CAPACITY :
DIFFERENTIAL PRESSURE :
RATED POWER :
MOC (CASING / INTERNAL) :
INSULATION / TRACING :
TRIM : VT-1500-069-A520-N
SEAL PLAN :

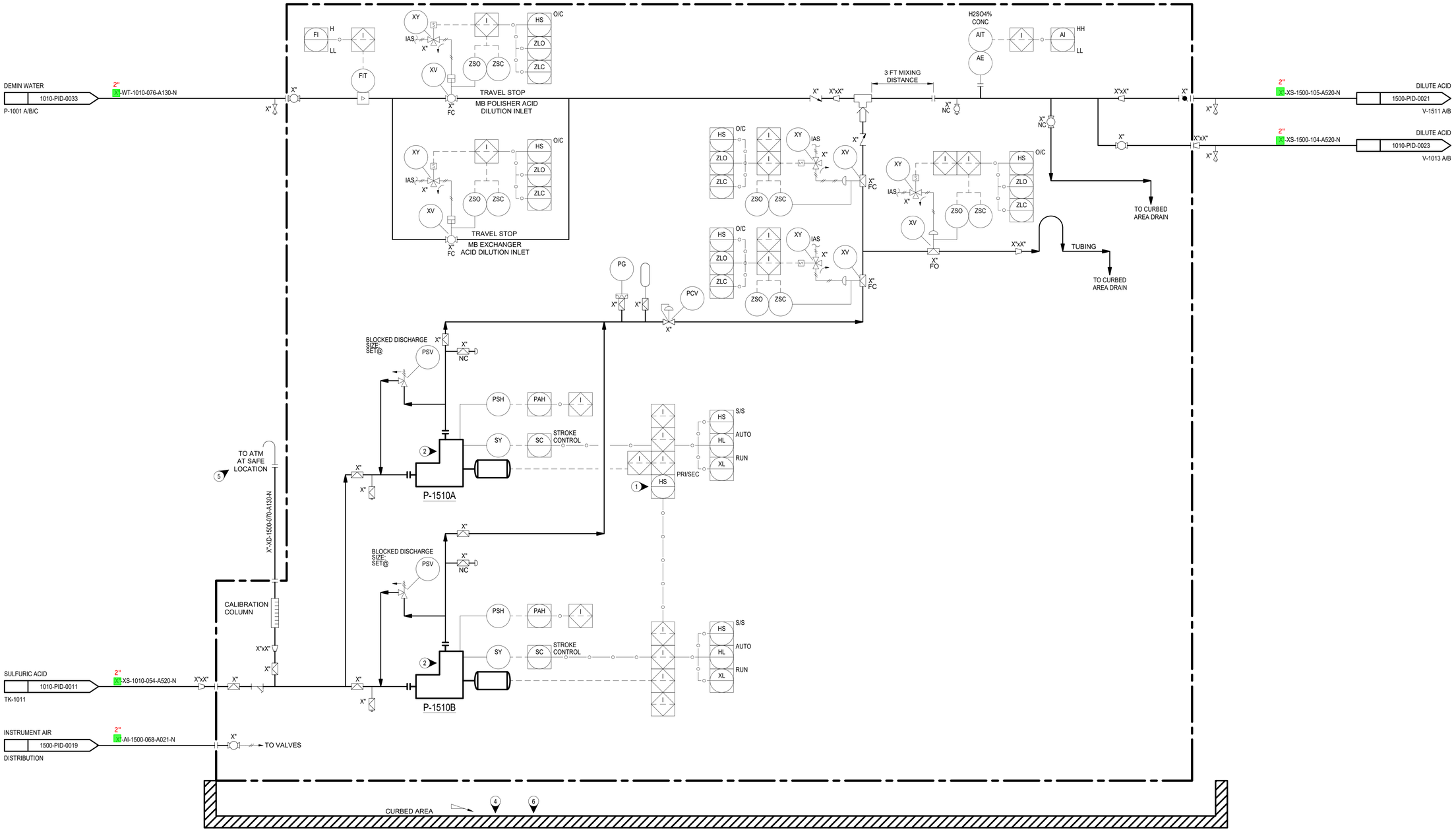

GENERAL NOTES

A. FOR PIPING AND INSTRUMENTATION LEGENDS AND SYMBOLS, SEE P&IDs 0000-PID-0001 THRU 0000-PID-00XX.

B. INSTRUMENT NUMBERS ON THIS P&ID ARE PREFIXED BY THE UNIT NUMBER ASSOCIATED WITH THIS P&ID UNLESS OTHERWISE SPECIFIED.

C. CONTROL VALVES AND BYPASS SIZES ARE PRELIMINARY AND WILL BE CONFIRMED DURING DETAIL DESIGN.

NOTES

1. DOSING PUMPS ALTERNATE DUTY AFTER EACH USE.
2. CHECK VALVES INTERNAL TO THE PUMP.
3. ALL MOTOR DRIVEN EQUIPMENT PROVIDED WITH A 3 POSITION START/ RUN/ STOP SWITCH. SPRING RETURN FROM START TO RUN, MAINTAIN STOP.
4. COMMON CURBED AREA FOR DEMIN ACID DILUTION SKID AND CONDENSATE POLISHING PACKAGE SULFURIC ACID DOSING PUMPS.
5. CALIBRATION COLUMN VENT IS EXTENDED TO A HEIGHT ABOVE THE MAXIMUM TANK ELEVATION.
6. ACID RESISTANT LINING.

CHECK PRINT

NOT PUBLISHED. ALL RIGHTS RESERVED BY THE ENGINEER. DRAWINGS AND SPECIFICATIONS, AS INSTRUMENTS OF SERVICE, ARE ISSUED TO DESCRIBE DESIGN INTENT. THEY ARE NOT TO BE USED ON OTHER PROJECTS OR EXTENSIONS TO THIS PROJECT, EXCEPT BY AGREEMENT IN WRITING AND WITH APPROPRIATE COMPENSATION TO THE ENGINEER. CONTRACTOR, SUB-CONTRACTORS, & SUPPLIERS ARE RESPONSIBLE FOR CONFIRMING AND CORRELATING DIMENSIONS AND CONDITIONS AT THE JOB SITE, AND SHALL NOTIFY THE ENGINEER IMMEDIATELY OF ANY ERRORS OR DISCREPANCIES IN REGARD TO SUCH. DRAWINGS, DESCRIBING DESIGN INTENT, SHALL NOT INDICATE EVERY DETAIL OR SYSTEM FOR CONSTRUCTION. CONTRACTOR, SUB-CONTRACTORS, AND SUPPLIERS SHALL BE RESPONSIBLE TO PROVIDE ADDITIONAL DRAWINGS AS NECESSARY FOR PERMITS, ERECTION, INSTALLATION, AND CO-ORDINATION OF ALL WORK. CONTRACTOR, SUB-CONTRACTORS, AND SUPPLIERS SHALL BE RESPONSIBLE FOR ALL LABOR AND MATERIALS REQUIRED IN ACCORDANCE WITH DESIGN INTENT. ALL MATERIALS SHALL BE NEW. UNLESS SPECIFIED OTHERWISE, AND SHALL BE INSTALLED LEVEL, PLUMB, STRAIGHT, AND TRUE TO LINE, IN ACCORDANCE WITH THE BEST PRACTICES OF THE TRADES. THE ENGINEER SHALL NOT BE RESPONSIBLE FOR CONSTRUCTION MEANS, METHODS, TECHNIQUES, SEQUENCES OR PROCEDURES, OR FOR SAFETY PRECAUTIONS AND PROGRAMS IN CONNECTION WITH THE WORK. ALL WORK SHALL BE PERFORMED IN ACCORDANCE WITH APPLICABLE CODES AND ORDINANCES.

REFERENCE DRAWINGS:

REV #	DATE	DESCRIPTION	DRWN	CHKD	APVD
A	12-05-25	ISSUED FOR APPROVAL	GS	APB	PDN

REV #	DATE	DESCRIPTION	DRWN	CHKD	APVD

MOTIVA

CLIENT: MOTIVA ENTERPRISES LLC
PLANT: PORT ARTHUR REFINERY
JOB NO:

PIPING & INSTRUMENTATION DIAGRAM
CONDENSATE POLISHING PACKAGE
SULFURIC ACID DOSING PUMPS

PROJ TITLE: AROMATICS UTILITY SCOPE REVIEW

SSP ENGINEERING & CONSULTING
13100 NORTHWEST FREEWAY
SUITE 625,
HOUSTON, TEXAS 77040

FIRM NUMBER #13619

PROJECT NO: 25MA02	SCALE: NONE
DRAWN BY: GS	CHECKED: APB
DESIGN BY:	ENG APVL: PDN
DRAWING NO: 1500-PID-0035	REV A

DRAWING: 1500-pid-0035.dwg PLOTTED BY: jason PLOT DATE: ---- DRAWING LOCATION: c:\users\jason\onedrive - engineers ssp\ssp's files - 25ma02 - aromatics utility scope cold eyes review\04 - design\04 - process\pids (Border Rev1 5.16.25)

V-2001A
AMMONIA TANK

SIZE :
TOTAL VOLUME :
DESIGN PRESSURE :
DESIGN TEMP :
MOC :
TRIM : VT-2000-029-A130-N
INSULATION / TRACING :

P-2001A/B
AMMONIA PUMPS

RATED CAPACITY :
DIFFERENTIAL PRESSURE :
RATED POWER :
MOC (CASING / INTERNAL) :
INSULATION / TRACING :
TRIM : VT-2000-030-A130-N
SEAL PLAN :

GENERAL NOTES

A. FOR PIPING AND INSTRUMENTATION LEGENDS AND SYMBOLS, SEE P&IDs 0000-PID-0001 THRU 0000-PID-00XX.
B. INSTRUMENT NUMBERS ON THIS P&ID ARE PREFIXED BY THE UNIT NUMBER ASSOCIATED WITH THIS P&ID UNLESS OTHERWISE SPECIFIED.
C. CONTROL VALVES AND BYPASS SIZES ARE PRELIMINARY AND WILL BE CONFIRMED DURING DETAIL DESIGN.

NOTES

1. COMMON IMPOUND AREA FOR AMMONIA DRUMS.
2. COMMON IMPOUND AREA FOR AMMONIA FEED PUMPS.
3. LOCATED AT HIGH POINT.
4. EMERGENCY BLOCK VALVE (EBV) - FIRE SAFE.
5. HS-XXXX, A LOCAL ESD SWITCH AT SAFE AREA FOR ALL EBV'S IN THE AMMONIA DRUM DIKE AREA.
6. FOR SEAL PLAN DETAILS, SEE P&ID 0000-PID-XXXX
7. VALVE SYSTEM IS ACCESSIBLE FROM GRADE.

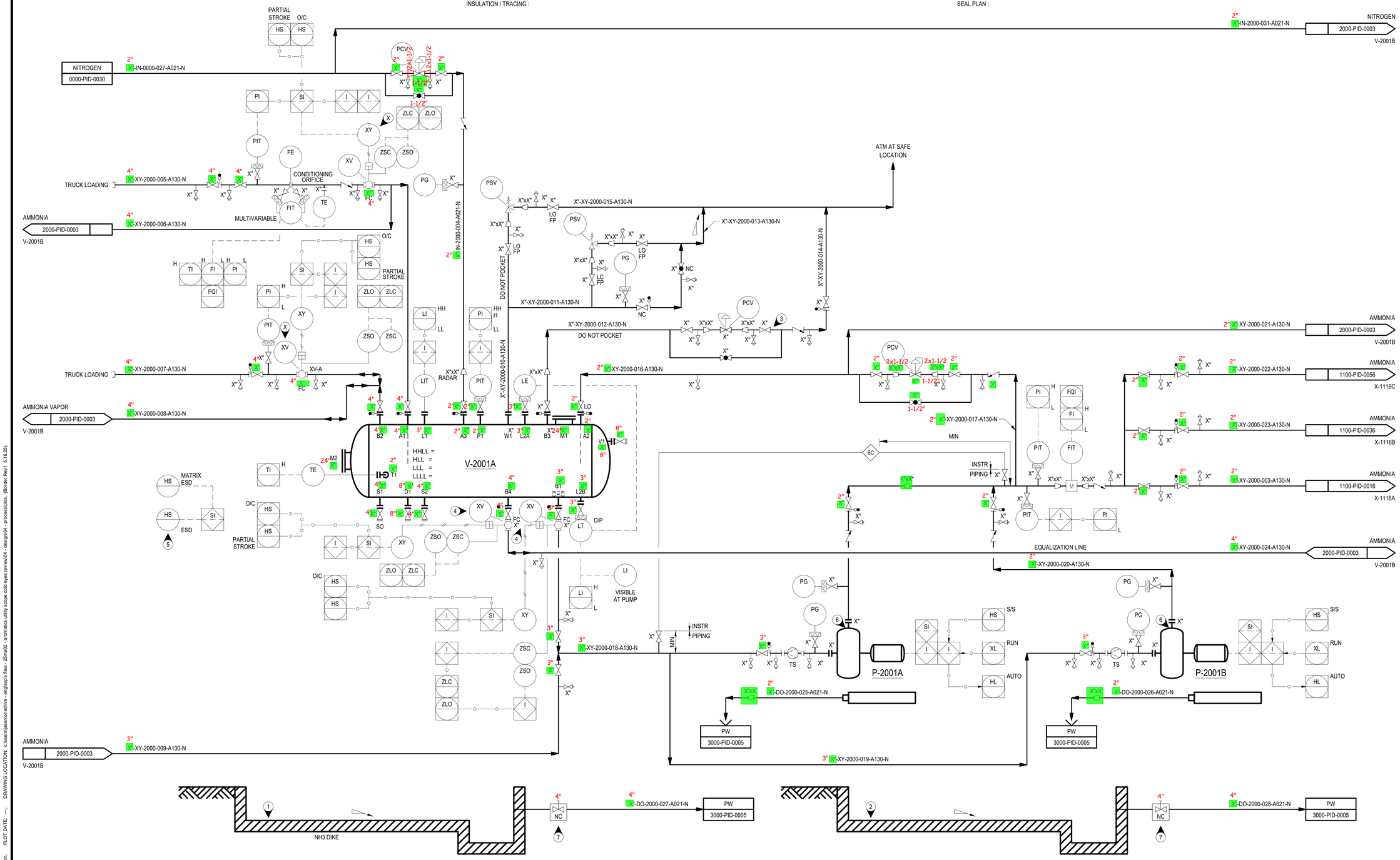

CHECK PRINT

NOT PUBLISHED, ALL RIGHTS RESERVED BY THE ENGINEER. DRAWINGS AND SPECIFICATIONS, AS INSTRUMENTS OF SERVICE, ARE ISSUED TO DESCRIBE DESIGN INTENT. THEY ARE NOT TO BE USED ON OTHER PROJECTS OR EXTENSIONS TO THIS PROJECT, EXCEPT BY AGREEMENT IN WRITING AND WITH APPROPRIATE COMPENSATION TO THE ENGINEER. CONTRACTOR, SUB-CONTRACTORS, & SUPPLIERS ARE RESPONSIBLE FOR CONFIRMING AND CORRELATING DIMENSIONS AND CONDITIONS AT THE JOB SITE, AND SHALL NOTIFY THE ENGINEER IMMEDIATELY OF ANY ERRORS OR DISCREPANCIES IN REGARD TO SUCH DRAWINGS, DESCRIBING DESIGN INTENT, SHALL NOT INDICATE EVERY DETAIL OR SYSTEM FOR CONSTRUCTION. CONTRACTOR, SUB-CONTRACTORS, AND SUPPLIERS SHALL BE RESPONSIBLE TO PROVIDE ADDITIONAL DRAWINGS AS NECESSARY FOR PERMITS, ERECTION, INSTALLATION, AND CO-ORDINATION OF ALL WORK. CONTRACTOR, SUB-CONTRACTORS, AND SUPPLIERS SHALL BE RESPONSIBLE FOR ALL LABOR AND MATERIALS REQUIRED IN ACCORDANCE WITH DESIGN INTENT. ALL MATERIALS SHALL BE NEW, UNLESS SPECIFIED OTHERWISE, AND SHALL BE INSTALLED LEVEL, PLUMB, STRAIGHT, AND TRUE TO LINE, IN ACCORDANCE WITH THE BEST PRACTICES OF THE TRADES. THE ENGINEER SHALL NOT BE RESPONSIBLE FOR CONSTRUCTION MEANS, METHODS, TECHNIQUES, SEQUENCES OR PROCEDURES, OR FOR SAFETY PRECAUTIONS AND PROGRAMS IN CONNECTION WITH THE WORK. ALL WORK SHALL BE PERFORMED IN ACCORDANCE WITH APPLICABLE CODES AND ORDINANCES.

DRAWING: 2000-pid-0001.dwg, PLOTTED BY: jason, PLOT DATE: ----, DRAWING LOCATION: c:\users\jason\onedrive - eng\ssp's files - 25ma02 - aromatics utility scope cold eyes review\04 - design\04 - process\pids, (Border Rev1 5.16.25)

REFERENCE DRAWINGS:

REV #	DATE	DESCRIPTION	DRWN	CHKD	APVD
A	12-05-25	ISSUED FOR APPROVAL	GS	APB	PDN

REV #	DATE	DESCRIPTION	DRWN	CHKD	APVD

MOTIVA

CLIENT: MOTIVA ENTERPRISES LLC
PLANT: PORT ARTHUR REFINERY
JOB NO:

PIPING & INSTRUMENTATION DIAGRAM
AMMONIA TANK A

PROJ TITLE: AROMATICS UTILITY SCOPE REVIEW

SSP ENGINEERING & CONSULTING
13100 NORTHWEST FREEWAY
SUITE 625,
HOUSTON, TEXAS 77040

FIRM NUMBER #13619

PROJECT NO: 25MA02	SCALE: NONE
DRAWN BY: GS	CHECKED: APB
DESIGN BY:	ENG APVL: PDN
DRAWING NO: 2000-PID-0001	REV A

V-2001B

AMMONIA TANK

SIZE :
TOTAL VOLUME :
DESIGN PRESSURE :
DESIGN TEMP :
MOC :
TRIM : VT-2000-039-A130-N
INSULATION / TRACING :

GENERAL NOTES

A. FOR PIPING AND INSTRUMENTATION LEGENDS AND SYMBOLS, SEE P&IDs 0000-PID-0001 THRU 0000-PID-00XX.
B. INSTRUMENT NUMBERS ON THIS P&ID ARE PREFIXED BY THE UNIT NUMBER ASSOCIATED WITH THIS P&ID UNLESS OTHERWISE SPECIFIED.
C. CONTROL VALVES AND BYPASS SIZES ARE PRELIMINARY AND WILL BE CONFIRMED DURING DETAIL DESIGN.

NOTES

1. EMERGENCY BLOCK VALVE (EBV) - FIRE SAFE.
2. COMMON IMPOUND AREA FOR AMMONIA DRUMS.
3. LOCATED AT HIGH POINT.

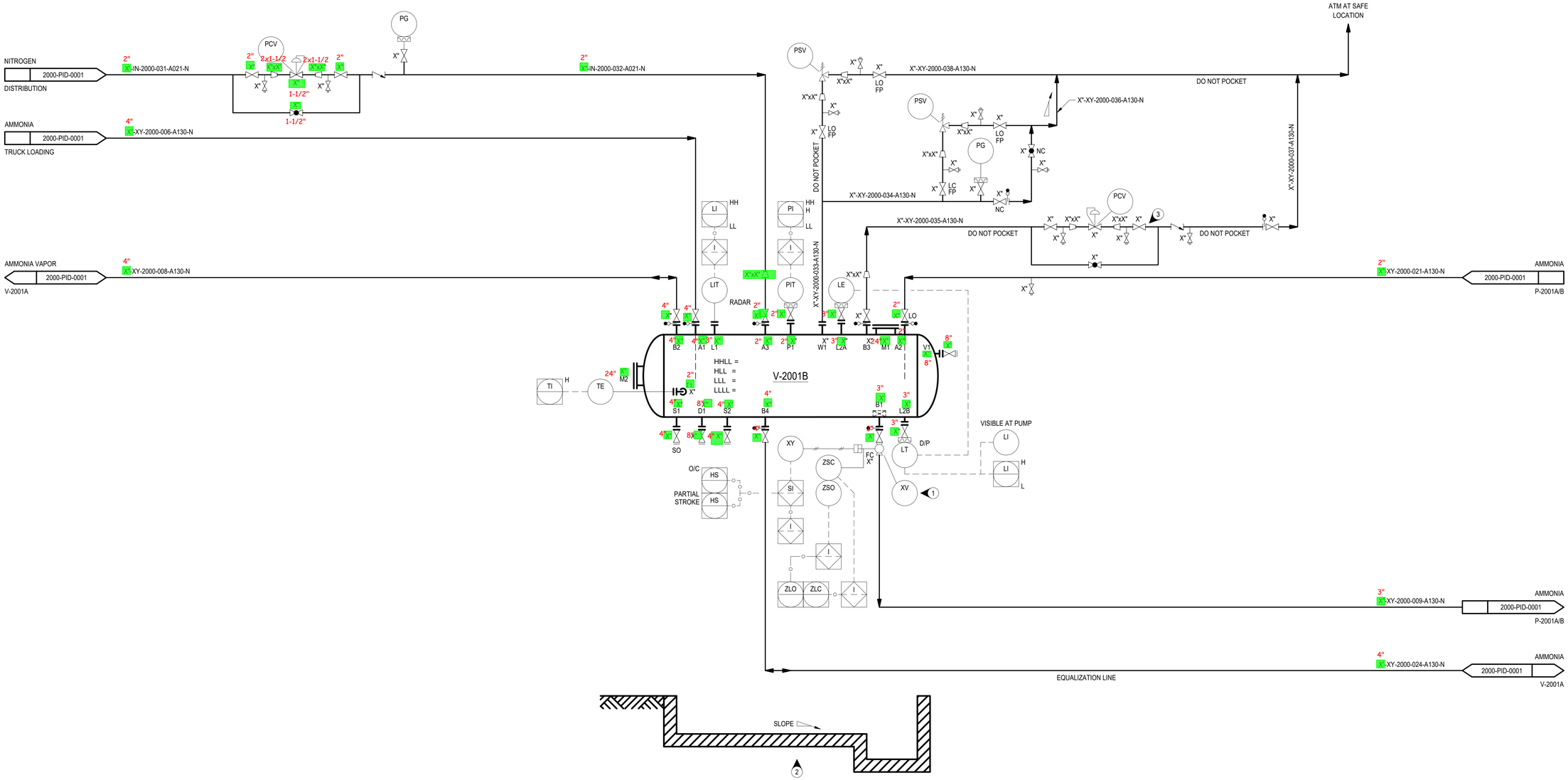

CHECK PRINT

NOT PUBLISHED. ALL RIGHTS RESERVED BY THE ENGINEER. DRAWINGS AND SPECIFICATIONS, AS INSTRUMENTS OF SERVICE, ARE ISSUED TO DESCRIBE DESIGN INTENT. THEY ARE NOT TO BE USED ON OTHER PROJECTS OR EXTENSIONS TO THIS PROJECT, EXCEPT BY AGREEMENT IN WRITING AND WITH APPROPRIATE COMPENSATION TO THE ENGINEER. CONTRACTOR, SUB-CONTRACTORS, & SUPPLIERS ARE RESPONSIBLE FOR CONFIRMING AND CORRELATING DIMENSIONS AND CONDITIONS AT THE JOB SITE, AND SHALL NOTIFY THE ENGINEER IMMEDIATELY OF ANY ERRORS OR DISCREPANCIES IN REGARD TO SUCH. DRAWINGS, DESCRIBING DESIGN INTENT, SHALL NOT INDICATE EVERY DETAIL OR SYSTEM FOR CONSTRUCTION. CONTRACTOR, SUB-CONTRACTORS, AND SUPPLIERS SHALL BE RESPONSIBLE TO PROVIDE ADDITIONAL DRAWINGS AS NECESSARY FOR PERMITS, ERECTION, INSTALLATION, AND CO-ORDINATION OF ALL WORK. CONTRACTOR, SUB-CONTRACTORS, AND SUPPLIERS SHALL BE RESPONSIBLE FOR ALL LABOR AND MATERIALS REQUIRED IN ACCORDANCE WITH DESIGN INTENT. ALL MATERIALS SHALL BE NEW, UNLESS SPECIFIED OTHERWISE, AND SHALL BE INSTALLED LEVEL, PLUMB, STRAIGHT, AND TRUE TO LINE, IN ACCORDANCE WITH THE BEST PRACTICES OF THE TRADES. THE ENGINEER SHALL NOT BE RESPONSIBLE FOR CONSTRUCTION MEANS, METHODS, TECHNIQUES, SEQUENCES OR PROCEDURES, OR FOR SAFETY PRECAUTIONS AND PROGRAMS IN CONNECTION WITH THE WORK. ALL WORK SHALL BE PERFORMED IN ACCORDANCE WITH APPLICABLE CODES AND ORDINANCES.

DRAWING: 2000-pid-0003.dwg, PLOTTED BY: jason, PLOT DATE: ----, DRAWING LOCATION: c:\users\jason\onedrive - ergisap's files - 25ma02 - aromatics utility scope cold eyes review\04 - design\04 - process\pids, (Border Rev1 5.16.25)

REFERENCE DRAWINGS:

REV #	DATE	DESCRIPTION	DRWN	CHKD	APVD
A	12-05-25	ISSUED FOR APPROVAL	GS	APB	PDN

REV #	DATE	DESCRIPTION	DRWN	CHKD	APVD

MOTIVA

CLIENT: MOTIVA ENTERPRISES LLC
PLANT: PORT ARTHUR REFINERY
JOB NO:

PIPING & INSTRUMENTATION DIAGRAM

AMMONIA TANK B

PROJ TITLE: AROMATICS UTILITY SCOPE REVIEW

SSP ENGINEERING & CONSULTING
13100 NORTHWEST FREEWAY
SUITE 625,
HOUSTON, TEXAS 77040

FIRM NUMBER #13619

PROJECT NO: 25MA02	SCALE: NONE
DRAWN BY: GS	CHECKED: APB
DESIGN BY:	ENG APVL: PDN
DRAWING NO: 2000-PID-0003	REV A

M-2003
CAUSTIC DILUTION STATIC MIXER
DESIGN CAPACITY :
RATED POWER :
MOC :
TRIM : VT-2000-048-A130-N
INSULATION :

TK-2003
SODIUM HYDROXIDE TANK
SIZE ID x HEIGHT :
TOTAL VOLUME :
DESIGN PRESSURE :
DESIGN TEMP :
MOC :
TRIM : VT-2000-049-A130-N
INSULATION / TRACING :

P-2003A/B
SODIUM HYDROXIDE PUMPS
RATED CAPACITY :
DIFFERENTIAL PRESSURE :
RATED POWER :
MOC (CASING / INTERNAL) :
INSULATION / TRACING :
TRIM : VT-2000-050-A130-N
SEAL PLAN :

GENERAL NOTES

A. FOR PIPING AND INSTRUMENTATION LEGENDS AND SYMBOLS, SEE P&IDs 0000-PID-0001 THRU 0000-PID-00XX.
B. INSTRUMENT NUMBERS ON THIS P&ID ARE PREFIXED BY THE UNIT NUMBER ASSOCIATED WITH THIS P&ID UNLESS OTHERWISE SPECIFIED.
C. CONTROL VALVES AND BYPASS SIZES ARE PRELIMINARY AND WILL BE CONFIRMED DURING DETAIL DESIGN.

NOTES

1. VALVE STEM TO BE ACCESSIBLE FROM GRADE.
2. MAINTAIN AT 104 °F.
3. IMPOUND AREA DEDICATED TO CAUSTIC (NaOH) TANK. COMMON SUMPS AND DRAINS SHOWN ON THIS P&ID.
4. ACCESS NEAR EDGE.

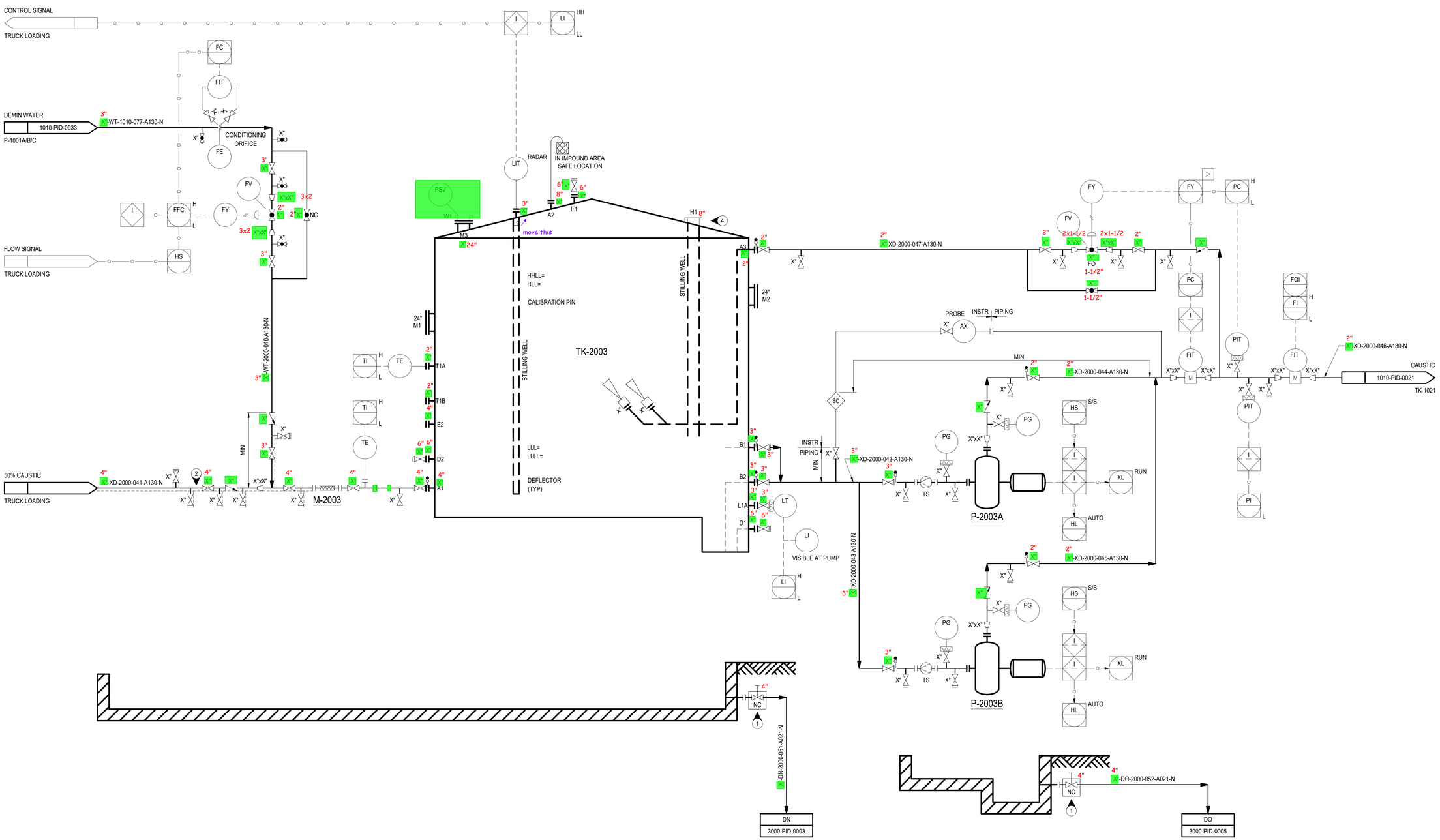

CHECK PRINT

NOT PUBLISHED. ALL RIGHTS RESERVED BY THE ENGINEER. DRAWINGS AND SPECIFICATIONS, AS INSTRUMENTS OF SERVICE, ARE ISSUED TO DESCRIBE DESIGN INTENT. THEY ARE NOT TO BE USED ON OTHER PROJECTS OR EXTENSIONS TO THIS PROJECT, EXCEPT BY AGREEMENT IN WRITING AND WITH APPROPRIATE COMPENSATION TO THE ENGINEER. CONTRACTOR, SUB-CONTRACTORS, & SUPPLIERS ARE RESPONSIBLE FOR CONFIRMING AND CORRELATING DIMENSIONS AND CONDITIONS AT THE JOB SITE, AND SHALL NOTIFY THE ENGINEER IMMEDIATELY OF ANY ERRORS OR DISCREPANCIES IN REGARD TO SUCH. DRAWINGS, DESCRIBING DESIGN INTENT, SHALL NOT INDICATE EVERY DETAIL OR SYSTEM FOR CONSTRUCTION. CONTRACTOR, SUB-CONTRACTORS, AND SUPPLIERS SHALL BE RESPONSIBLE TO PROVIDE ADDITIONAL DRAWINGS AS NECESSARY FOR PERMITS, ERECTION, INSTALLATION, AND CO-ORDINATION OF ALL WORK. CONTRACTOR, SUB-CONTRACTORS, AND SUPPLIERS SHALL BE RESPONSIBLE FOR ALL LABOR AND MATERIALS REQUIRED IN ACCORDANCE WITH DESIGN INTENT. ALL MATERIALS SHALL BE NEW, UNLESS SPECIFIED OTHERWISE, AND SHALL BE INSTALLED LEVEL, PLUMB, STRAIGHT, AND TRUE TO LINE, IN ACCORDANCE WITH THE BEST PRACTICES OF THE TRADES. THE ENGINEER SHALL NOT BE RESPONSIBLE FOR CONSTRUCTION MEANS, METHODS, TECHNIQUES, SEQUENCES OR PROCEDURES, OR FOR SAFETY PRECAUTIONS AND PROGRAMS IN CONNECTION WITH THE WORK. ALL WORK SHALL BE PERFORMED IN ACCORDANCE WITH APPLICABLE CODES AND ORDINANCES.

REFERENCE DRAWINGS:

REV #	DATE	DESCRIPTION	DRWN	CHKD	APVD
A	12-05-25	ISSUED FOR APPROVAL	GS	APB	PDN

REV #	DATE	DESCRIPTION	DRWN	CHKD	APVD

MOTIVA

CLIENT: MOTIVA ENTERPRISES LLC
PLANT: PORT ARTHUR REFINERY
JOB NO:

PIPING & INSTRUMENTATION DIAGRAM
SODIUM HYDROXIDE STORAGE

PROJ TITLE: AROMATICS UTILITY SCOPE REVIEW

SSP ENGINEERING & CONSULTING
13100 NORTHWEST FREEWAY
SUITE 625,
HOUSTON, TEXAS 77040

FIRM NUMBER #13619

PROJECT NO: 25MA02	SCALE: NONE
DRAWN BY: GS	CHECKED: APB
DESIGN BY:	ENG APVL: PDN
DRAWING NO: 2000-PID-0005	REV A

DRAWING: 2000-pid-0005.dwg PLOTTED BY: jason PLOT DATE: ---- DRAWING LOCATION: c:\users\jason\onedrive - engineers files - 25ma02 - aromatics utility scope cold eyes review\04 - design\04 - process\pids (Border Rev1 5.16.25)

TK-2002

SULFURIC ACID TANK
SIZE ID x HEIGHT :
TOTAL VOLUME :
DESIGN PRESSURE :
DESIGN TEMP :
MOC :
TRIM : VT-2000-059-A520-N
INSULATION / TRACING :

GENERAL NOTES

A. FOR PIPING AND INSTRUMENTATION LEGENDS AND SYMBOLS, SEE P&IDs 0000-PID-0001 THRU 0000-PID-00XX.
B. INSTRUMENT NUMBERS ON THIS P&ID ARE PREFIXED BY THE UNIT NUMBER ASSOCIATED WITH THIS P&ID UNLESS OTHERWISE SPECIFIED.
C. CONTROL VALVES AND BYPASS SIZES ARE PRELIMINARY AND WILL BE CONFIRMED DURING DETAIL DESIGN.

NOTES

1. VALVE STEM TO BE ACCESSIBLE FROM GRADE.
2. IMPOUND AREA DEDICATED TO ACID TANK. COMMON SUMPS AND DRAINS SHOWN ON THIS P&ID.
3. ACCESS NEAR EDGE.

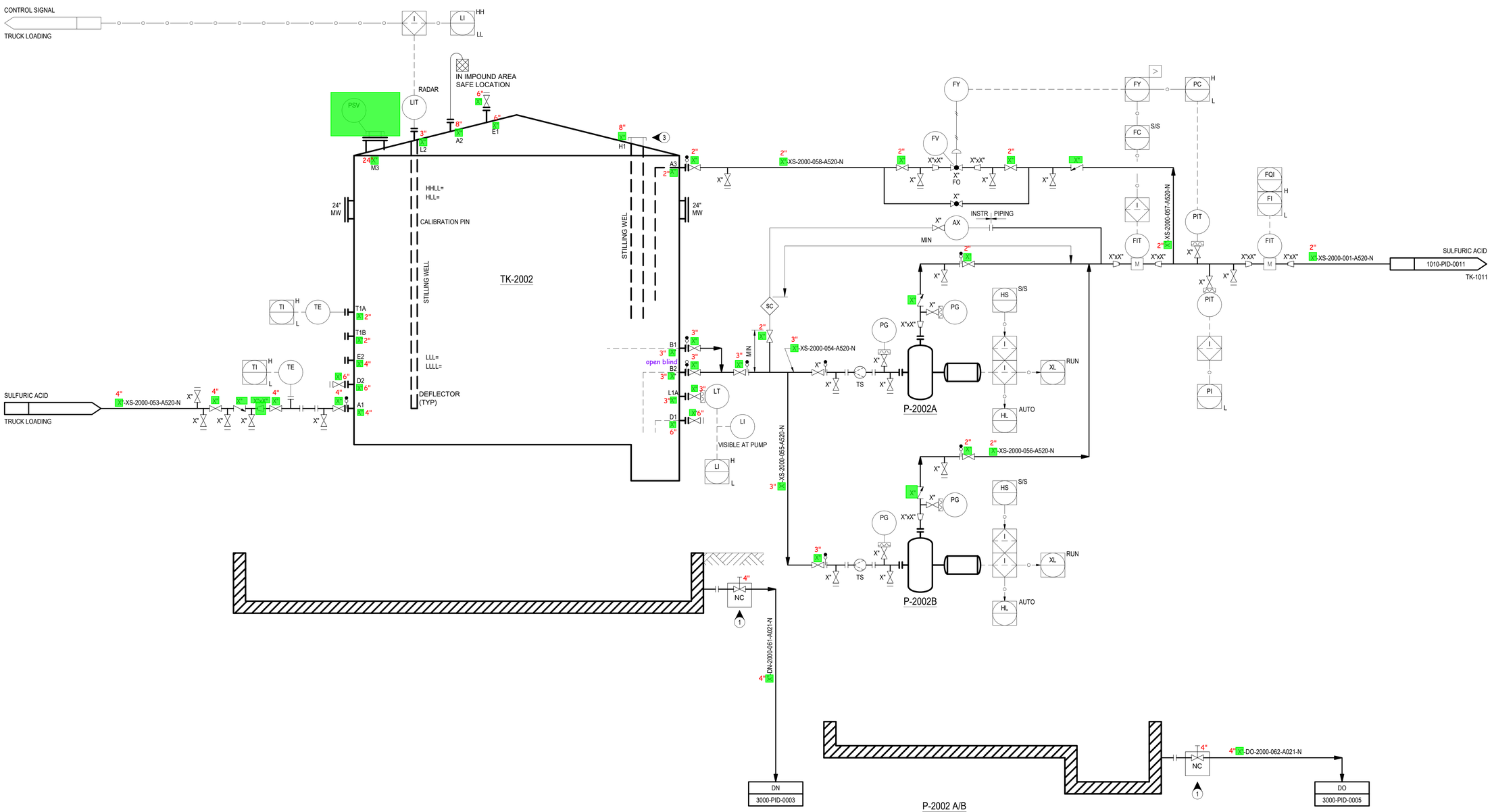

P-2002 A/B

SULFURIC ACID PUMPS
RATED CAPACITY :
DIFFERENTIAL PRESSURE :
RATED POWER :
MOC (CASING / INTERNAL) :
INSULATION / TRACING :
TRIM : VT-2000-059-A520-N
SEAL PLAN :

CHECK PRINT

NOT PUBLISHED, ALL RIGHTS RESERVED BY THE ENGINEER. DRAWINGS AND SPECIFICATIONS, AS INSTRUMENTS OF SERVICE, ARE ISSUED TO DESCRIBE DESIGN INTENT. THEY ARE NOT TO BE USED ON OTHER PROJECTS OR EXTENSIONS TO THIS PROJECT, EXCEPT BY AGREEMENT IN WRITING AND WITH APPROPRIATE COMPENSATION TO THE ENGINEER. CONTRACTOR, SUB-CONTRACTORS, & SUPPLIERS ARE RESPONSIBLE FOR CONFIRMING AND CORRELATING DIMENSIONS AND CONDITIONS AT THE JOB SITE, AND SHALL NOTIFY THE ENGINEER IMMEDIATELY OF ANY ERRORS OR DISCREPANCIES IN REGARD TO SUCH DRAWINGS, DESCRIBING DESIGN INTENT, SHALL NOT INDICATE EVERY DETAIL OR SYSTEM FOR CONSTRUCTION. CONTRACTOR, SUB-CONTRACTORS, AND SUPPLIERS SHALL BE RESPONSIBLE TO PROVIDE ADDITIONAL DRAWINGS AS NECESSARY FOR PERMITS, ERECTION, INSTALLATION, AND CO-ORDINATION OF ALL WORK. CONTRACTOR, SUB-CONTRACTORS, AND SUPPLIERS SHALL BE RESPONSIBLE FOR ALL LABOR AND MATERIALS REQUIRED IN ACCORDANCE WITH DESIGN INTENT. ALL MATERIALS SHALL BE NEW, UNLESS SPECIFIED OTHERWISE, AND SHALL BE INSTALLED LEVEL, PLUMB, STRAIGHT, AND TRUE TO LINE, IN ACCORDANCE WITH THE BEST PRACTICES OF THE TRADES. THE ENGINEER SHALL NOT BE RESPONSIBLE FOR CONSTRUCTION MEANS, METHODS, TECHNIQUES, SEQUENCES OR PROCEDURES, OR FOR SAFETY PRECAUTIONS AND PROGRAMS IN CONNECTION WITH THE WORK. ALL WORK SHALL BE PERFORMED IN ACCORDANCE WITH APPLICABLE CODES AND ORDINANCES.

DRAWING: 2000-pid-0007.dwg PLOTTED BY: jason, PLOT DATE: ---- DRAWING LOCATION: c:\users\jason\onedrive - eng\ssp's files - 25ma02 - aromatics utility scope cold eyes review\04 - design\04 - process\pid\s (Border Rev1 5.16.25)

REFERENCE DRAWINGS:

REV #	DATE	DESCRIPTION	DRWN	CHKD	APVD
A	12-05-25	ISSUED FOR APPROVAL	GS	APB	PDN

REV #	DATE	DESCRIPTION	DRWN	CHKD	APVD

MOTIVA

CLIENT: MOTIVA ENTERPRISES LLC
PLANT: PORT ARTHUR REFINERY
JOB NO:

PIPING & INSTRUMENTATION DIAGRAM

SULFURIC ACID STORAGE

PROJ TITLE: AROMATICS UTILITY SCOPE REVIEW

SSP ENGINEERING & CONSULTING
13100 NORTHWEST FREEWAY
SUITE 625,
HOUSTON, TEXAS 77040

FIRM NUMBER #13619

PROJECT NO: 25MA02	SCALE: NONE
DRAWN BY: GS	CHECKED: APB
DESIGN BY:	ENG APVL: PDN
DRAWING NO: 2000-PID-0007	REV A

P-3001A/B
LOW FLOW STORMWATER PUMPS
RATED CAPACITY :
DIFFERENTIAL PRESSURE :
RATED POWER :
MOC (CASING / INTERNAL) :
INSULATION / TRACING :
TRIM : VT-3000-006-A021-N
SEAL PLAN :

SU-3001
STORMWATER SUMP
SIZE :
WORKING CAPACITY :
INTERNALS :
MOC :
TRIM : VT-3000-007-A021-N

P-3002A/B
HIGH FLOW STORMWATER PUMPS
RATED CAPACITY :
DIFFERENTIAL PRESSURE :
RATED POWER :
MOC (CASING / INTERNAL) :
INSULATION / TRACING :
TRIM : VT-3000-008-A021-N
SEAL PLAN :

GENERAL NOTES

A. FOR PIPING AND INSTRUMENTATION LEGENDS AND SYMBOLS, SEE P&IDs 0000-PID-0001 THRU 0000-PID-00XX.
B. INSTRUMENT NUMBERS ON THIS P&ID ARE PREFIXED BY THE UNIT NUMBER ASSOCIATED WITH THIS P&ID UNLESS OTHERWISE SPECIFIED.
C. CONTROL VALVES AND BYPASS SIZES ARE PRELIMINARY AND WILL BE CONFIRMED DURING DETAIL DESIGN.

NOTES

1. TO STORMWATER DITCH.
2. FOR EACH SET OF PUMPS, THE LEAD PUMP WILL START ON HIGH LEVEL AND THE LAG PUMP WILL START ON HIGH HIGH LEVEL IN THEIR RESPECTIVE SUMP. EACH SET OF PUMPS WILL STOP ON LOW LEVEL IN THEIR RESPECTIVE SUMP.
3. FIRST FLUSH PUMP TRIP. BOTH SETS OF PUMPS WILL STOP ONCE TOTAL FIRST FLUSH VOLUME IS COLLECTED.
4. FOR TRUCK LOADING.
5. DISSIMILAR CHECK VALVE TYPES.
6. SYSTEM RESET SEQUENCE (MANUAL RESET) IS:
   A. INTERLOCK OPENS SHUTOFF VALVE TO DITCH AND CLOSES SHUTOFF VALVE TO TANK.
   B. ONE LOW AND ONE HIGH PUMP WILL START.
   C. WHEN LL REACHES IN THE RESPECTIVE SUMP, THE RESPECTIVE PUMPS TRIP.
   D. FINALLY, RESET SHUT OFF VALVES TO NORMAL POSITION OF PUMPING TO THE TANK.
7. SEE PLAN VIEW FOR OIL SKIM BOX.
8. 24"x 24"ACCESS HATCH.

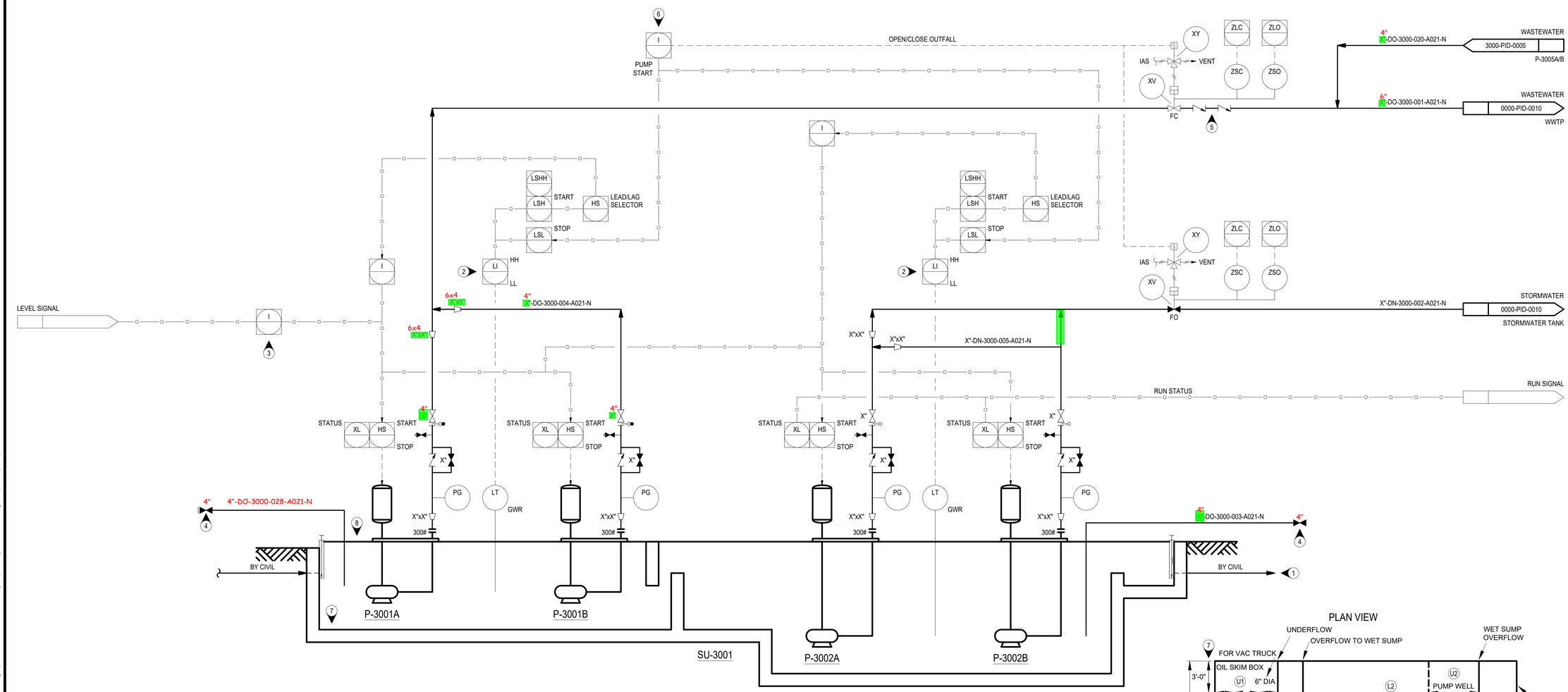

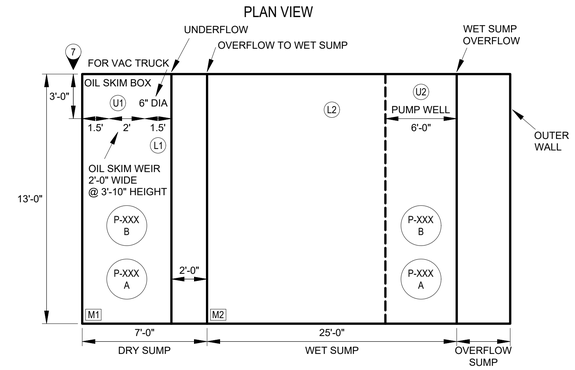

CHECK PRINT

NOT PUBLISHED, ALL RIGHTS RESERVED BY THE ENGINEER. DRAWINGS AND SPECIFICATIONS, AS INSTRUMENTS OF SERVICE, ARE ISSUED TO DESCRIBE DESIGN INTENT. THEY ARE NOT TO BE USED ON OTHER PROJECTS OR EXTENSIONS TO THIS PROJECT, EXCEPT BY AGREEMENT IN WRITING AND WITH APPROPRIATE COMPENSATION TO THE ENGINEER. CONTRACTOR, SUB-CONTRACTORS, & SUPPLIERS ARE RESPONSIBLE FOR CONFIRMING AND CORRELATING DIMENSIONS AND CONDITIONS AT THE JOB SITE, AND SHALL NOTIFY THE ENGINEER IMMEDIATELY OF ANY ERRORS OR DISCREPANCIES IN REGARD TO SUCH. DRAWINGS, DESCRIBING DESIGN INTENT, SHALL NOT INDICATE EVERY DETAIL OR SYSTEM FOR CONSTRUCTION. CONTRACTOR, SUB-CONTRACTORS, AND SUPPLIERS SHALL BE RESPONSIBLE TO PROVIDE ADDITIONAL DRAWINGS AS NECESSARY FOR PERMITS, ERECTION, INSTALLATION, AND CO-ORDINATION OF ALL WORK. CONTRACTOR, SUB-CONTRACTORS, AND SUPPLIERS SHALL BE RESPONSIBLE FOR ALL LABOR AND MATERIALS REQUIRED IN ACCORDANCE WITH DESIGN INTENT. ALL MATERIALS SHALL BE NEW, UNLESS SPECIFIED OTHERWISE, AND SHALL BE INSTALLED LEVEL, PLUMB, STRAIGHT, AND TRUE TO LINE, IN ACCORDANCE WITH THE BEST PRACTICES OF THE TRADES. THE ENGINEER SHALL NOT BE RESPONSIBLE FOR CONSTRUCTION MEANS, METHODS, TECHNIQUES, SEQUENCES OR PROCEDURES, OR FOR SAFETY PRECAUTIONS AND PROGRAMS IN CONNECTION WITH THE WORK. ALL WORK SHALL BE PERFORMED IN ACCORDANCE WITH APPLICABLE CODES AND ORDINANCES.

REFERENCE DRAWINGS:

REV #	DATE	DESCRIPTION	DRWN	CHKD	APVD
A	12-05-25	ISSUED FOR APPROVAL	GS	APB	PDN

REV #	DATE	DESCRIPTION	DRWN	CHKD	APVD

MOTIVA

CLIENT: MOTIVA ENTERPRISES LLC
PLANT: PORT ARTHUR REFINERY
JOB NO:

PIPING & INSTRUMENTATION DIAGRAM
STORMWATER SUMP

PROJ TITLE: AROMATICS UTILITY SCOPE REVIEW

SSP ENGINEERING & CONSULTING
13100 NORTHWEST FREEWAY
SUITE 625,
HOUSTON, TEXAS 77040
FIRM NUMBER #13619

PROJECT NO: 25MA02	SCALE: NONE
DRAWN BY: GS	CHECKED: APB
DESIGN BY:	ENG APVL: PDN
DRAWING NO: 3000-PID-0001	REV A

DRAWING: 3000-pid-0001.dwg, PLOTTED BY: jason, PLOT DATE: ----, DRAWING LOCATION: c:\users\jasonroneshve - english\ssp's files - 25ma02 - aromatics utility scope cold eyes review\04 - design\04 - process\pids, (Border Rev1 5.16.25)

SU-3003

NONOILY WATER SUMP

SIZE :
WORKING CAPACITY :
INTERNALS :
MOC :
TRIM : VT-3000-014-A021-N

P-3003A/B

NONOILY WATER PUMPS

RATED CAPACITY :
DIFFERENTIAL PRESSURE :
RATED POWER :
MOC (CASING / INTERNAL) :
INSULATION / TRACING :
TRIM : VT-3000-015-A021-N
SEAL PLAN :

GENERAL NOTES

A. FOR PIPING AND INSTRUMENTATION LEGENDS AND SYMBOLS, SEE P&IDs 0000-PID-0001 THRU 0000-PID-00XX.
B. INSTRUMENT NUMBERS ON THIS P&ID ARE PREFIXED BY THE UNIT NUMBER ASSOCIATED WITH THIS P&ID UNLESS OTHERWISE SPECIFIED.
C. CONTROL VALVES AND BYPASS SIZES ARE PRELIMINARY AND WILL BE CONFIRMED DURING DETAIL DESIGN.

NOTES

1. EACH PUMP SET IS IN A LEAD/ LAG CONFIGURATION. THE LEAD PUMP IN THE PUMP SET WILL START ON HIGH LEVEL AND THE LAG PUMP WILL START ON HIGH HIGH LEVEL. BOTH PUMPS IN THE PUMP SET WILL STOP ON LOW LEVEL.
2. TRUCK LOADING CONNECTION.

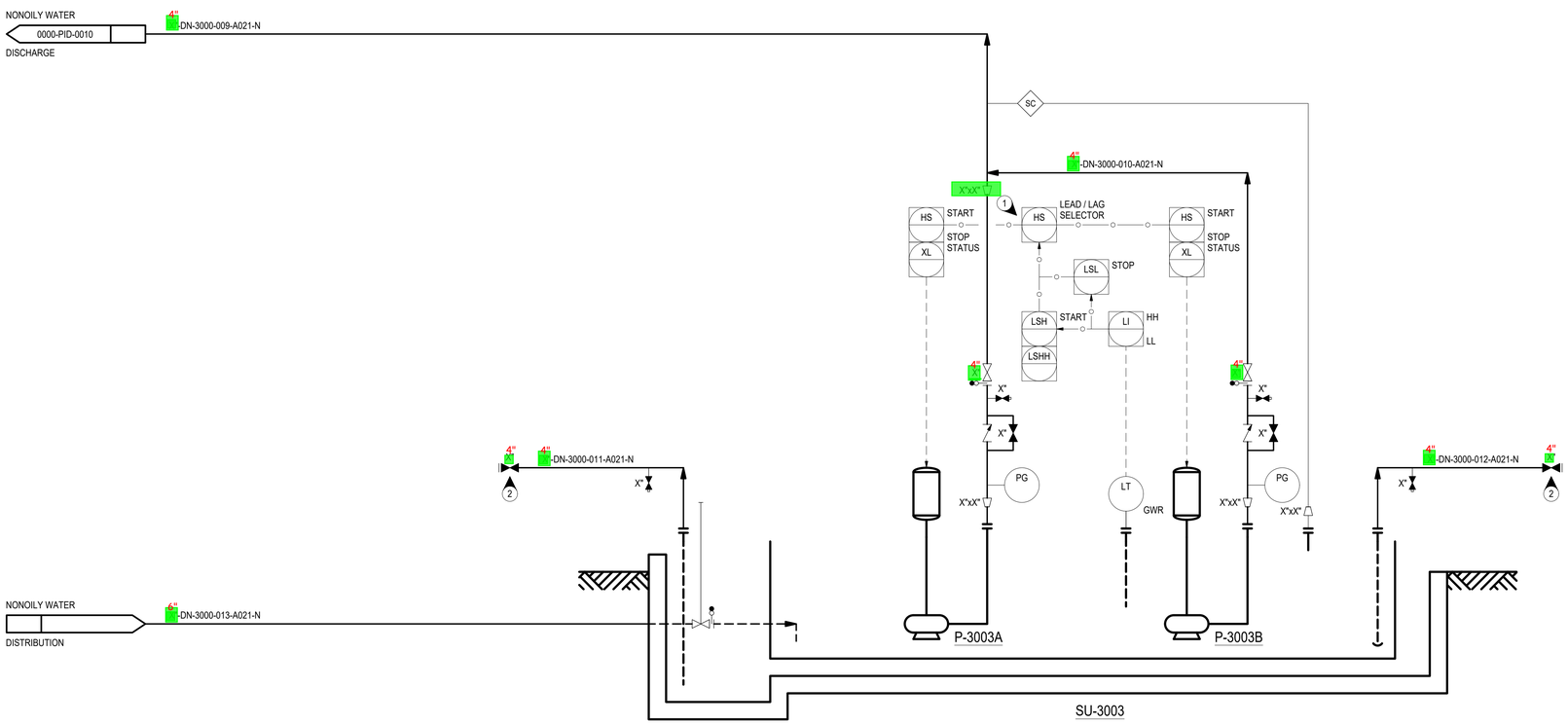

CHECK PRINT

NOT PUBLISHED. ALL RIGHTS RESERVED BY THE ENGINEER. DRAWINGS AND SPECIFICATIONS, AS INSTRUMENTS OF SERVICE, ARE ISSUED TO DESCRIBE DESIGN INTENT. THEY ARE NOT TO BE USED ON OTHER PROJECTS OR EXTENSIONS TO THIS PROJECT, EXCEPT BY AGREEMENT IN WRITING AND WITH APPROPRIATE COMPENSATION TO THE ENGINEER. CONTRACTOR, SUB-CONTRACTORS, & SUPPLIERS ARE RESPONSIBLE FOR CONFIRMING AND CORRELATING DIMENSIONS AND CONDITIONS AT THE JOB SITE, AND SHALL NOTIFY THE ENGINEER IMMEDIATELY OF ANY ERRORS OR DISCREPANCIES IN REGARD TO SUCH. DRAWINGS, DESCRIBING DESIGN INTENT, SHALL NOT INDICATE EVERY DETAIL OR SYSTEM FOR CONSTRUCTION. CONTRACTOR, SUB-CONTRACTORS, AND SUPPLIERS SHALL BE RESPONSIBLE TO PROVIDE ADDITIONAL DRAWINGS AS NECESSARY FOR PERMITS, ERECTION, INSTALLATION, AND CO-ORDINATION OF ALL WORK. CONTRACTOR, SUB-CONTRACTORS, AND SUPPLIERS SHALL BE RESPONSIBLE FOR ALL LABOR AND MATERIALS REQUIRED IN ACCORDANCE WITH DESIGN INTENT. ALL MATERIALS SHALL BE NEW, UNLESS SPECIFIED OTHERWISE, AND SHALL BE INSTALLED LEVEL, PLUMB, STRAIGHT, AND TRUE TO LINE, IN ACCORDANCE WITH THE BEST PRACTICES OF THE TRADES. THE ENGINEER SHALL NOT BE RESPONSIBLE FOR CONSTRUCTION MEANS, METHODS, TECHNIQUES, SEQUENCES OR PROCEDURES, OR FOR SAFETY PRECAUTIONS AND PROGRAMS IN CONNECTION WITH THE WORK. ALL WORK SHALL BE PERFORMED IN ACCORDANCE WITH APPLICABLE CODES AND ORDINANCES.

REFERENCE DRAWINGS:

REV #	DATE	DESCRIPTION	DRWN	CHKD	APVD
A	12-05-25	ISSUE FOR APPROVAL	GS	APB	PDN

REV #	DATE	DESCRIPTION	DRWN	CHKD	APVD

MOTIVA

CLIENT: MOTIVA ENTERPRISES LLC
PLANT: PORT ARTHUR REFINERY
JOB NO:

PIPING & INSTRUMENTATION DIAGRAM

WASTEWATER
NONOILY WATER COLLECTION

PROJ TITLE: AROMATICS UTILITY SCOPE REVIEW

SSP ENGINEERING & CONSULTING
13100 NORTHWEST FREEWAY
SUITE 625,
HOUSTON, TEXAS 77040

FIRM NUMBER #13619

PROJECT NO: 25MA02	SCALE: NONE
DRAWN BY: GS	CHECKED: APB
DESIGN BY:	ENG APVL: PDN
DRAWING NO: 3000-PID-0003	REV A

DRAWING: 3000-pid-0003.dwg PLOTTED BY: jason PLOT DATE: ---- DRAWING LOCATION: c:\users\jason\onedrive - engineap's files - 25ma02 - aromatics utility scope cold eyes review\04 - design\04 - process\pids (Border Rev1 5.16.25)

SU-3005
OILY WATER SUMP
SIZE :
WORKING CAPACITY :
INTERNALS :
MOC :
TRIM : VT-3000-021-A021-N

P-3005A/B
OILY WATER PUMPS
RATED CAPACITY :
DIFFERENTIAL PRESSURE :
RATED POWER :
MOC (CASING / INTERNAL) :
INSULATION / TRACING :
TRIM : VT-3000-022-A021-N
SEAL PLAN :

GENERAL NOTES

A. FOR PIPING AND INSTRUMENTATION LEGENDS AND SYMBOLS, SEE P&IDs 0000-PID-0001 THRU 0000-PID-00XX.
B. INSTRUMENT NUMBERS ON THIS P&ID ARE PREFIXED BY THE UNIT NUMBER ASSOCIATED WITH THIS P&ID UNLESS OTHERWISE SPECIFIED.
C. CONTROL VALVES AND BYPASS SIZES ARE PRELIMINARY AND WILL BE CONFIRMED DURING DETAIL DESIGN.

NOTES

1. EACH PUMP SET IS IN A LEAD/ LAG CONFIGURATION. THE LEAD PUMP IN THE PUMP SET WILL START ON HIGH LEVEL AND THE LAG PUMP WILL START ON HIGH HIGH LEVEL. BOTH PUMPS IN THE PUMP SET WILL STOP ON LOW LEVEL.
2. TRUCK LOADING CONNECTION.

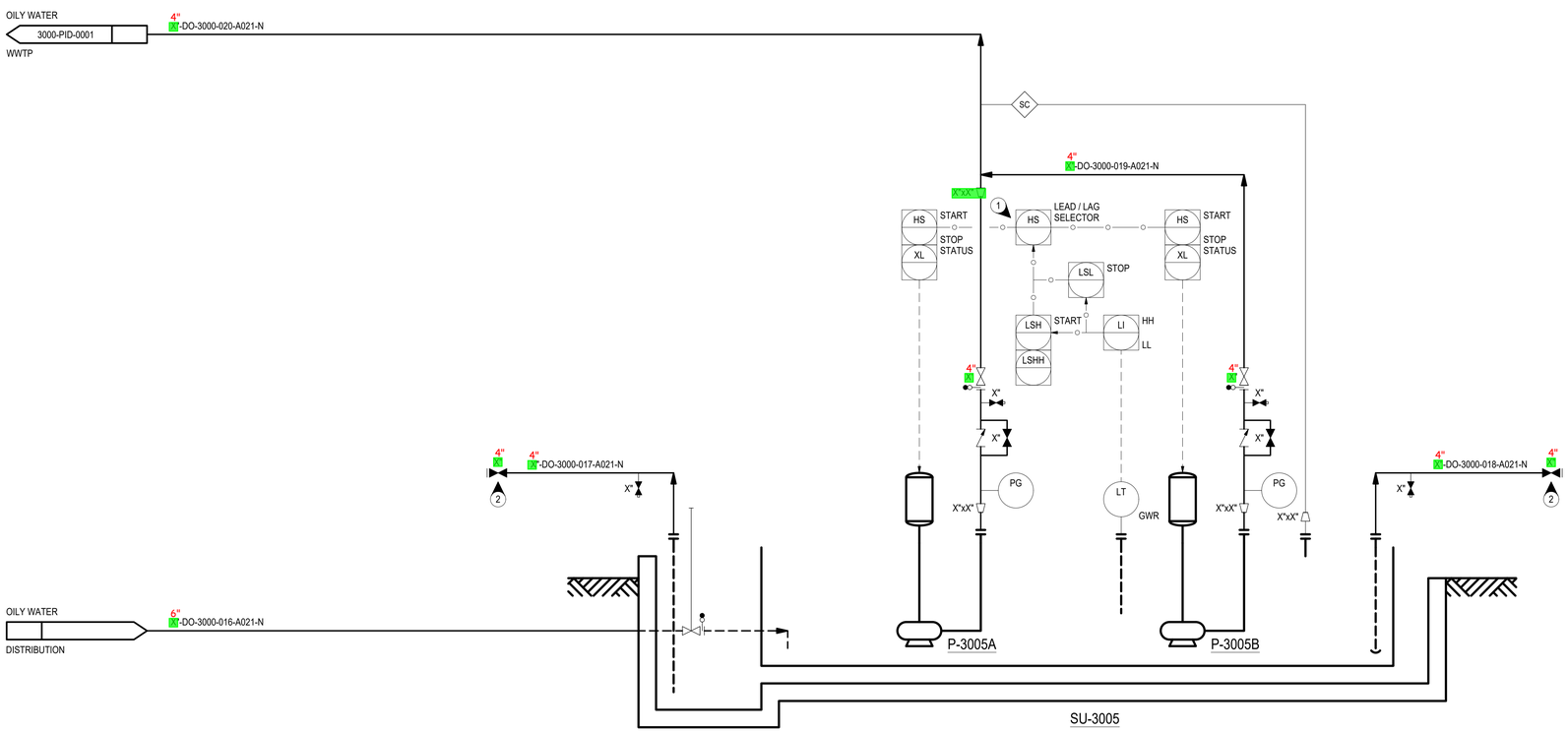

CHECK PRINT

NOT PUBLISHED. ALL RIGHTS RESERVED BY THE ENGINEER. DRAWINGS AND SPECIFICATIONS, AS INSTRUMENTS OF SERVICE, ARE ISSUED TO DESCRIBE DESIGN INTENT. THEY ARE NOT TO BE USED ON OTHER PROJECTS OR EXTENSIONS TO THIS PROJECT, EXCEPT BY AGREEMENT IN WRITING AND WITH APPROPRIATE COMPENSATION TO THE ENGINEER. CONTRACTOR, SUB-CONTRACTORS, & SUPPLIERS ARE RESPONSIBLE FOR CONFIRMING AND CORRELATING DIMENSIONS AND CONDITIONS AT THE JOB SITE, AND SHALL NOTIFY THE ENGINEER IMMEDIATELY OF ANY ERRORS OR DISCREPANCIES IN REGARD TO SUCH. DRAWINGS, DESCRIBING DESIGN INTENT, SHALL NOT INDICATE EVERY DETAIL OR SYSTEM FOR CONSTRUCTION. CONTRACTOR, SUB-CONTRACTORS, AND SUPPLIERS SHALL BE RESPONSIBLE TO PROVIDE ADDITIONAL DRAWINGS AS NECESSARY FOR PERMITS, ERECTION, INSTALLATION, AND CO-ORDINATION OF ALL WORK. CONTRACTOR, SUB-CONTRACTORS, AND SUPPLIERS SHALL BE RESPONSIBLE FOR ALL LABOR AND MATERIALS REQUIRED IN ACCORDANCE WITH DESIGN INTENT. ALL MATERIALS SHALL BE NEW, UNLESS SPECIFIED OTHERWISE, AND SHALL BE INSTALLED LEVEL, PLUMB, STRAIGHT, AND TRUE TO LINE, IN ACCORDANCE WITH THE BEST PRACTICES OF THE TRADES. THE ENGINEER SHALL NOT BE RESPONSIBLE FOR CONSTRUCTION MEANS, METHODS, TECHNIQUES, SEQUENCES OR PROCEDURES, OR FOR SAFETY PRECAUTIONS AND PROGRAMS IN CONNECTION WITH THE WORK. ALL WORK SHALL BE PERFORMED IN ACCORDANCE WITH APPLICABLE CODES AND ORDINANCES.

REFERENCE DRAWINGS:

REV #	DATE	DESCRIPTION	DRWN	CHKD	APVD
A	12-05-25	ISSUED FOR APPROVAL	GS	APB	PDN

REV #	DATE	DESCRIPTION	DRWN	CHKD	APVD

MOTIVA

CLIENT: MOTIVA ENTERPRISES LLC
PLANT: PORT ARTHUR REFINERY
JOB NO:

PIPING & INSTRUMENTATION DIAGRAM
WASTEWATER
OILY WATER COLLECTION

PROJ TITLE: AROMATICS UTILITY SCOPE REVIEW

SSP ENGINEERING & CONSULTING
13100 NORTHWEST FREEWAY
SUITE 625,
HOUSTON, TEXAS 77040

FIRM NUMBER #13619

PROJECT NO: 25MA02	SCALE: NONE
DRAWN BY: GS	CHECKED: APB
DESIGN BY:	ENG APVL: PDN
DRAWING NO: 3000-PID-0005	REV A

DRAWING: 3000-pid-0005.dwg PLOTTED BY: jason PLOT DATE: ---- DRAWING LOCATION: c:\users\jason\onedrive - engineap's files - 25ma02 - aromatics utility scope cold eyes review\04 - design\04 - process\pids (Border Rev1 5.16.25)

SU-3007

SANITARY LIFT STATION
DESIGN CAPACITY :
RATED POWER :
MOC :
TRIM : VT-3000-028-A021-N
INSULATION :

P-3007A/B

SANITARY LIFT STATION PUMPS
RATED CAPACITY :
DIFFERENTIAL PRESSURE :
RATED POWER :
MOC (CASING / INTERNAL) :
INSULATION / TRACING :
TRIM : VT-3000-029-A021-N
SEAL PLAN :

GENERAL NOTES

A. FOR PIPING AND INSTRUMENTATION LEGENDS AND SYMBOLS, SEE P&IDs 0000-PID-0001 THRU 0000-PID-00XX.
B. INSTRUMENT NUMBERS ON THIS P&ID ARE PREFIXED BY THE UNIT NUMBER ASSOCIATED WITH THIS P&ID UNLESS OTHERWISE SPECIFIED.
C. CONTROL VALVES AND BYPASS SIZES ARE PRELIMINARY AND WILL BE CONFIRMED DURING DETAIL DESIGN.

NOTES

1. CONTROLS START ONE PUMP AT HIGH LEVEL AND THE SECOND AT HIGH HIGH LEVEL.
2. PRIMARY PUMP OPERATION ALTERNATIVES BETWEEN PUMPS.
3. LOW LIQUID LEVEL STOPS BOTH PUMPS.
4. TRUCK LOADING.
5. 38"x20" PUMP ACCESS DOOR.

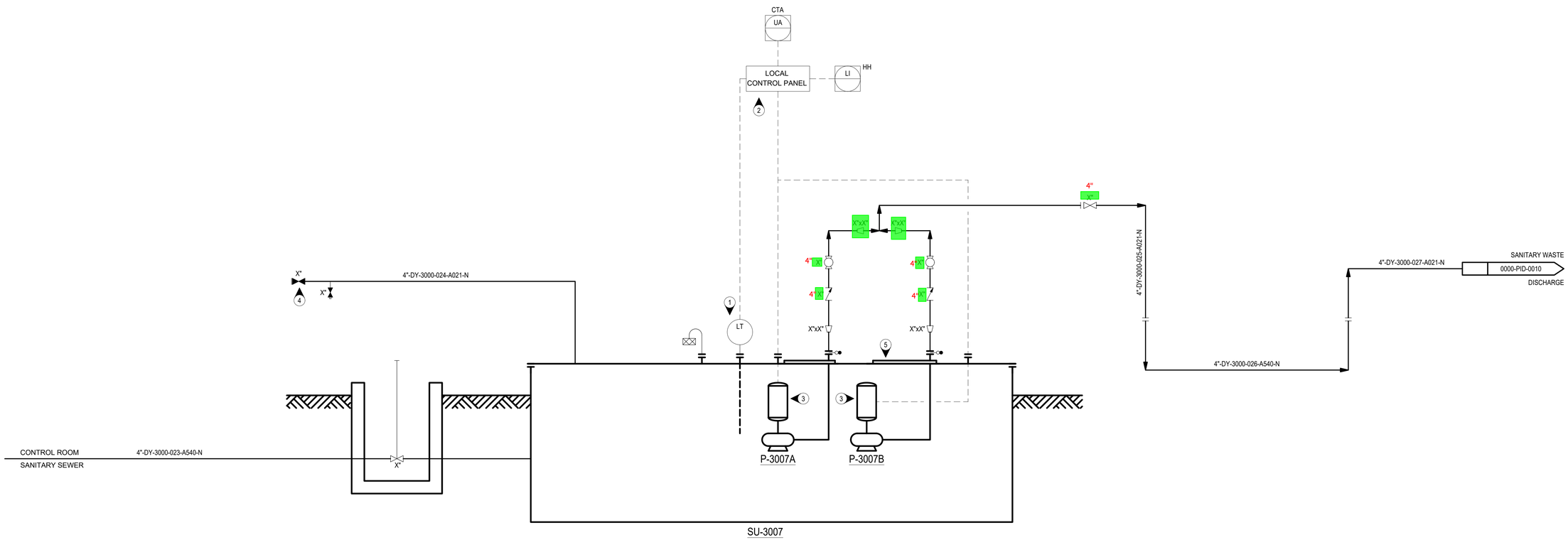

CHECK PRINT

NOT PUBLISHED, ALL RIGHTS RESERVED BY THE ENGINEER. DRAWINGS AND SPECIFICATIONS, AS INSTRUMENTS OF SERVICE, ARE ISSUED TO DESCRIBE DESIGN INTENT. THEY ARE NOT TO BE USED ON OTHER PROJECTS OR EXTENSIONS TO THIS PROJECT, EXCEPT BY AGREEMENT IN WRITING AND WITH APPROPRIATE COMPENSATION TO THE ENGINEER. CONTRACTOR, SUB-CONTRACTORS, & SUPPLIERS ARE RESPONSIBLE FOR CONFIRMING AND CORRELATING DIMENSIONS AND CONDITIONS AT THE JOB SITE, AND SHALL NOTIFY THE ENGINEER IMMEDIATELY OF ANY ERRORS OR DISCREPANCIES IN REGARD TO SUCH. DRAWINGS, DESCRIBING DESIGN INTENT, SHALL NOT INDICATE EVERY DETAIL OR SYSTEM FOR CONSTRUCTION. CONTRACTOR, SUB-CONTRACTORS, AND SUPPLIERS SHALL BE RESPONSIBLE TO PROVIDE ADDITIONAL DRAWINGS AS NECESSARY FOR PERMITS, ERECTION, INSTALLATION, AND CO-ORDINATION OF ALL WORK. CONTRACTOR, SUB-CONTRACTORS, AND SUPPLIERS SHALL BE RESPONSIBLE FOR ALL LABOR AND MATERIALS REQUIRED IN ACCORDANCE WITH DESIGN INTENT. ALL MATERIALS SHALL BE NEW, UNLESS SPECIFIED OTHERWISE, AND SHALL BE INSTALLED LEVEL, PLUMB, STRAIGHT, AND TRUE TO LINE, IN ACCORDANCE WITH THE BEST PRACTICES OF THE TRADES. THE ENGINEER SHALL NOT BE RESPONSIBLE FOR CONSTRUCTION MEANS, METHODS, TECHNIQUES, SEQUENCES OR PROCEDURES, OR FOR SAFETY PRECAUTIONS AND PROGRAMS IN CONNECTION WITH THE WORK. ALL WORK SHALL BE PERFORMED IN ACCORDANCE WITH APPLICABLE CODES AND ORDINANCES.

DRAWING: 3000-pid-0007.dwg PLOTTED BY: jason PLOT DATE: ---- DRAWING LOCATION: c:\users\jason\onedrive - english's files - 25ma02 - aromatics utility scope cold eyes review\04 - design\04 - process\pids (Border Rev1 5.16.25)

REFERENCE DRAWINGS:

REV #	DATE	DESCRIPTION	DRWN	CHKD	APVD
A	12-05-25	ISSUED FOR APPROVAL	GS	APB	PDN

REV #	DATE	DESCRIPTION	DRWN	CHKD	APVD

MOTIVA

CLIENT: MOTIVA ENTERPRISES LLC
PLANT: PORT ARTHUR REFINERY
JOB NO:

PIPING & INSTRUMENTATION DIAGRAM
WASTEWATER
SANITARY LIFT STATION

PROJ TITLE: AROMATICS UTILITY SCOPE REVIEW

SSP ENGINEERING & CONSULTING
13100 NORTHWEST FREEWAY
SUITE 625,
HOUSTON, TEXAS 77040

FIRM NUMBER #13619

PROJECT NO: 25MA02	SCALE: NONE
DRAWN BY: GS	CHECKED: APB
DESIGN BY:	ENG APVL: PDN
DRAWING NO: 3000-PID-0007	REV A