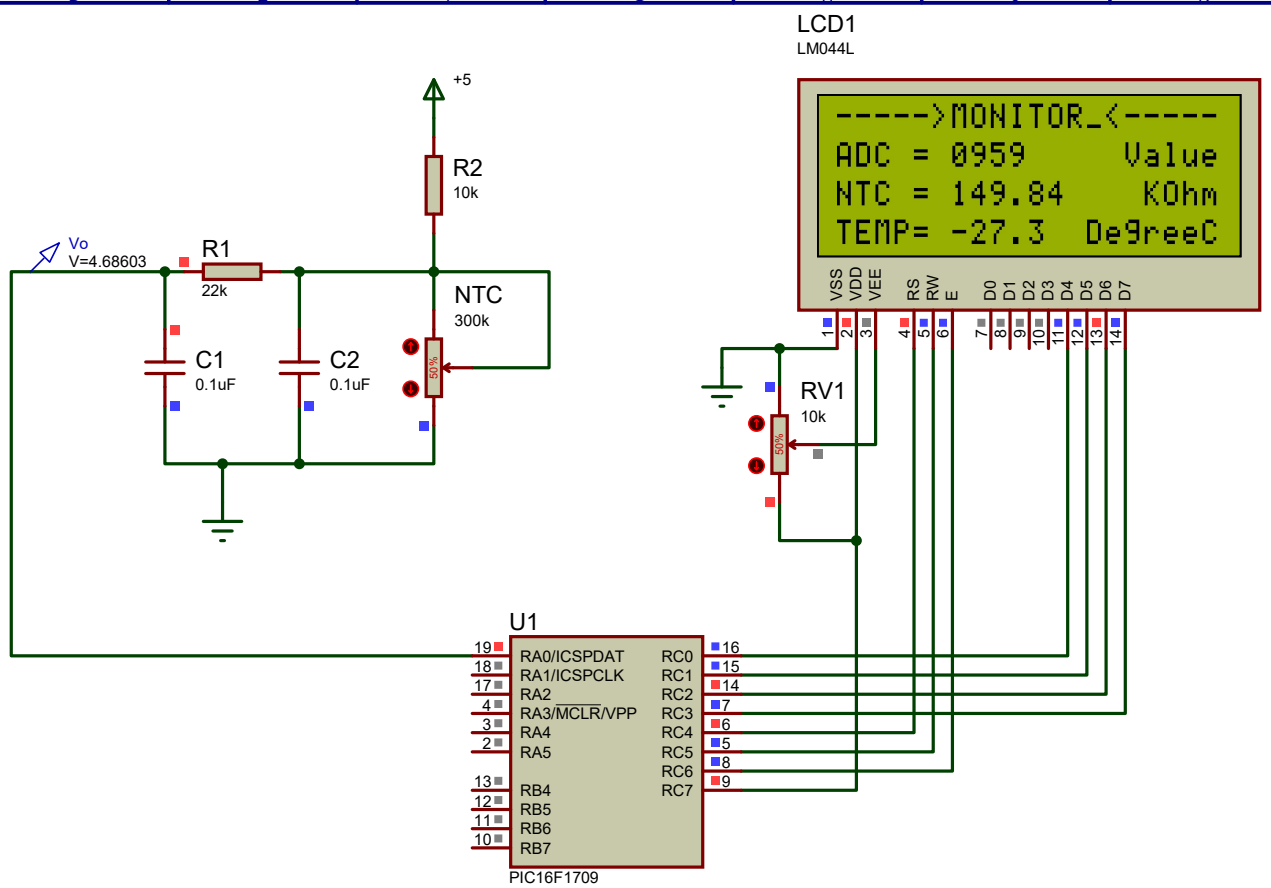

FILE NAME: Algorithm_compute_NTC.pdsprj	SIZE:
DESIGN TITLE: Algorithm_compute_NTC.pdsprj	DATE: 30-Dec-20
PATH: I:\G-Suite_JobMaterials\W-RBM-28112\W-Project-Completed 3JA	PAGE: 1 of 1
BY: @AUTHOR REV:@REV	TIME: 12:34:25 PM