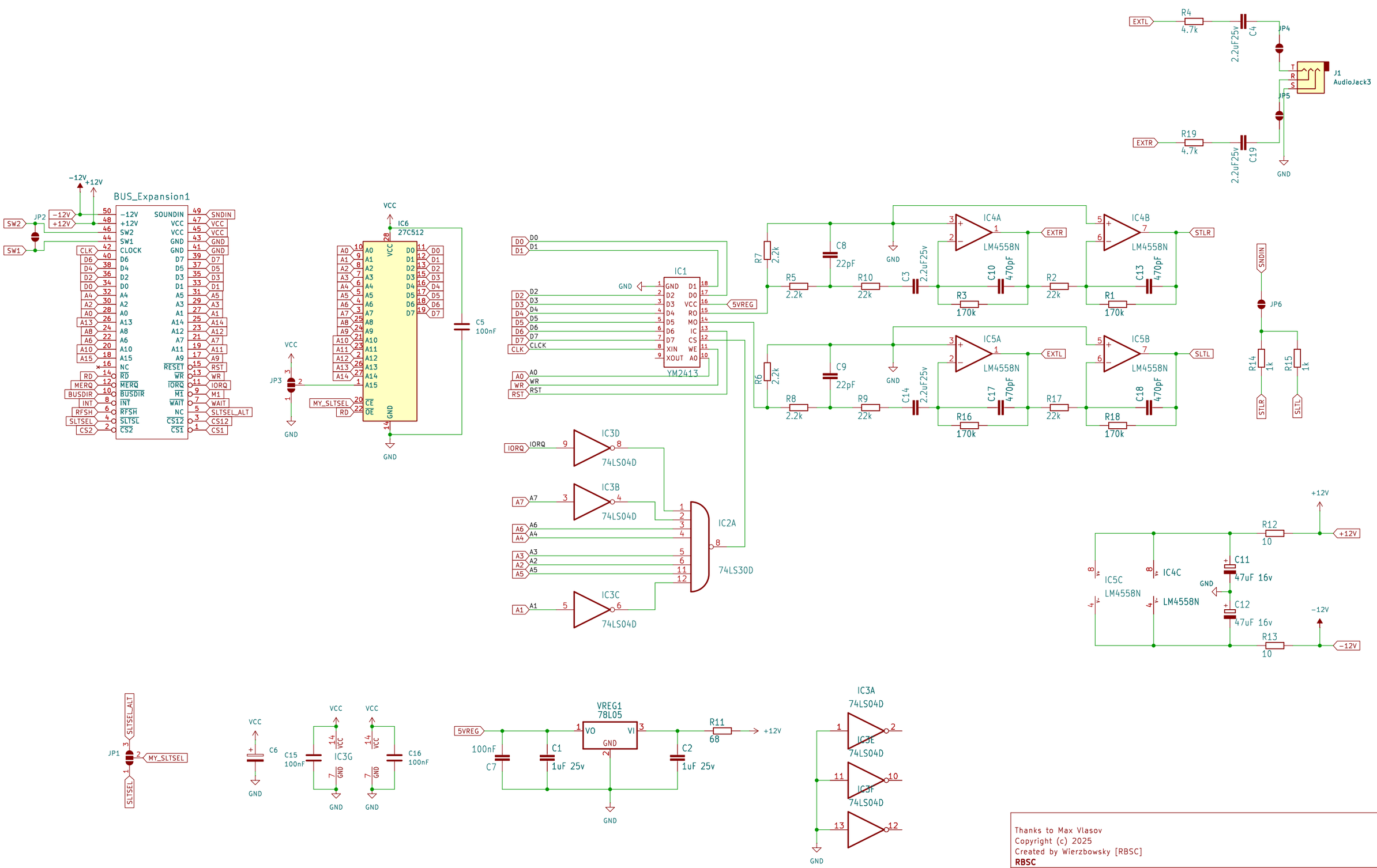

Thanks to Max Vlasov
Copyright (c) 2025
Created by Wierzbowsky [RBSC]
RBSC

Sheet: /
File: DaewooBackslotFMPAC.kicad_sch

Title: Daewoo Backslot FMPAC

Size: A3	Date: 2026-01-04	**Rev: 1.1**
KiCad E.D.A. 9.0.3		Id: 1/1