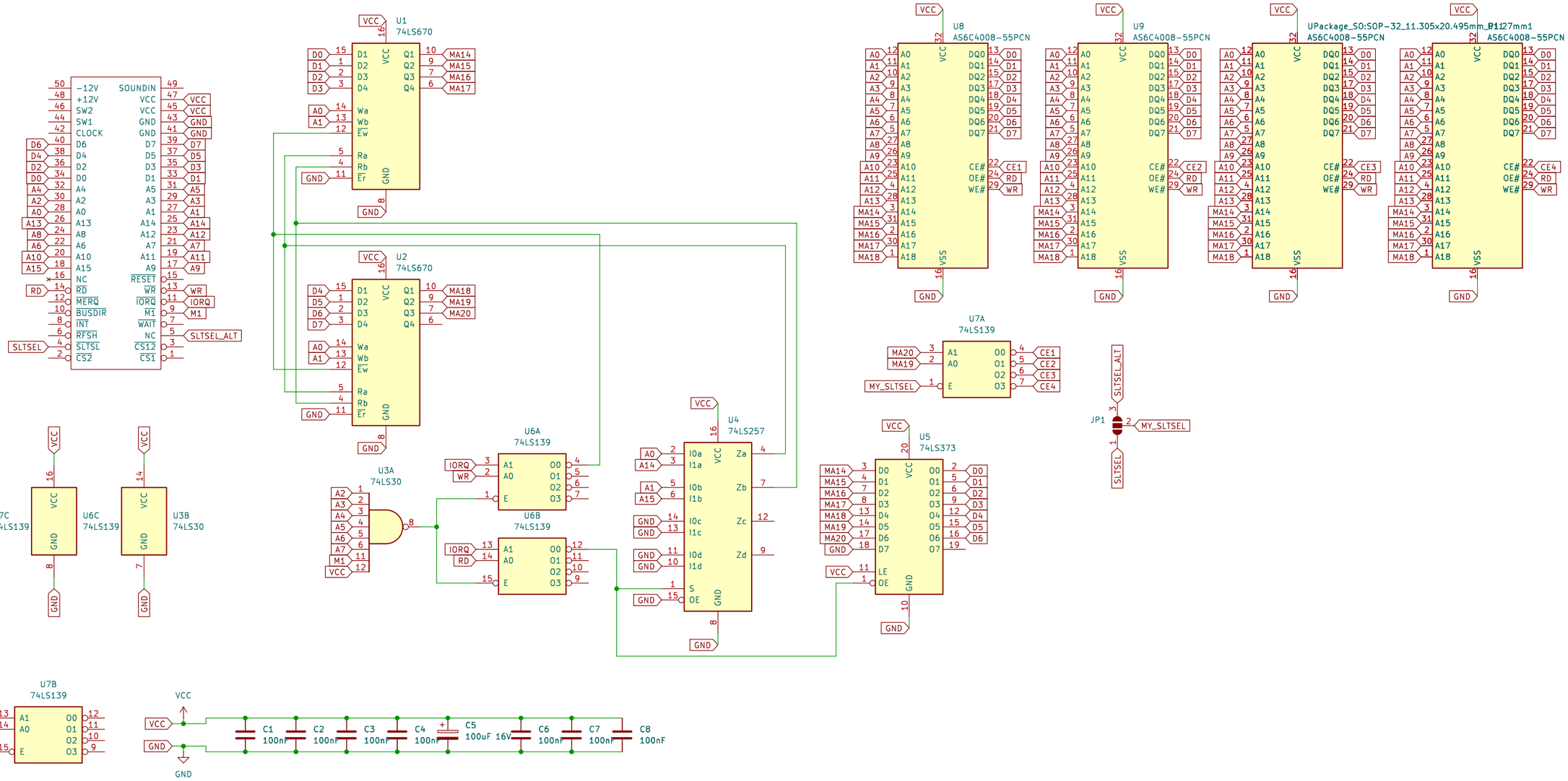

Based on design by Andrey Koryakin
Copyright (c) 2025
Created by Wierzbowsky [RBSC]
RBSC

Sheet: /
File: DaewooBackslotRAMExpansion.kicad_sch

Title: Daewoo Backslot RAM Expansion

Size: A3	Date: 2025-08-04	Rev: 1.0
KiCad E.D.A. 9.0.3		Id: 1/1