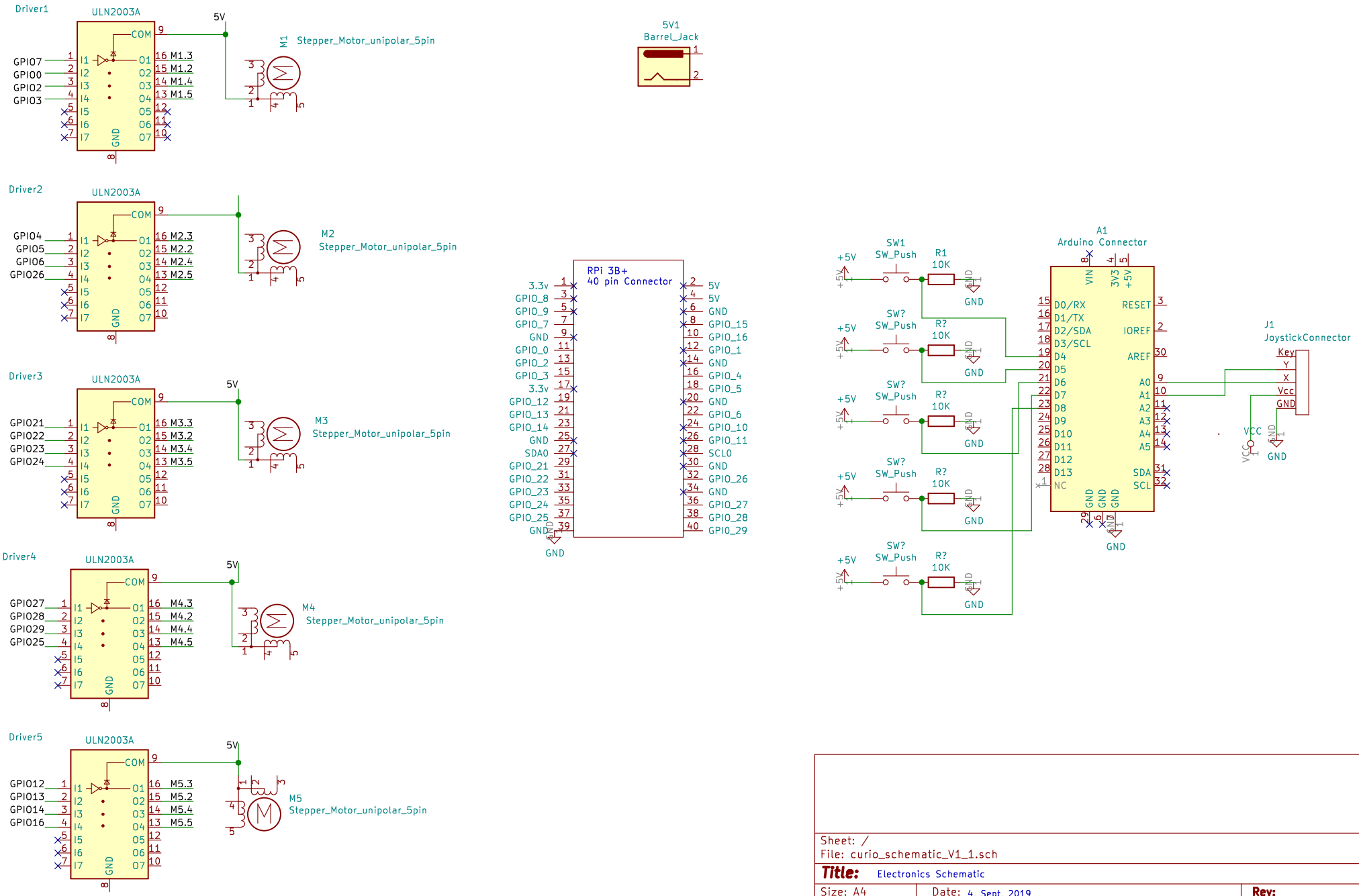

Sheet: /
File: curio_schematic_V1_1.sch

Title: Electronics Schematic

Size: A4	Date: 4, Sept, 2019	Rev:
KiCad E.D.A. eeschema (5.1.4)-1		Id: 1/1