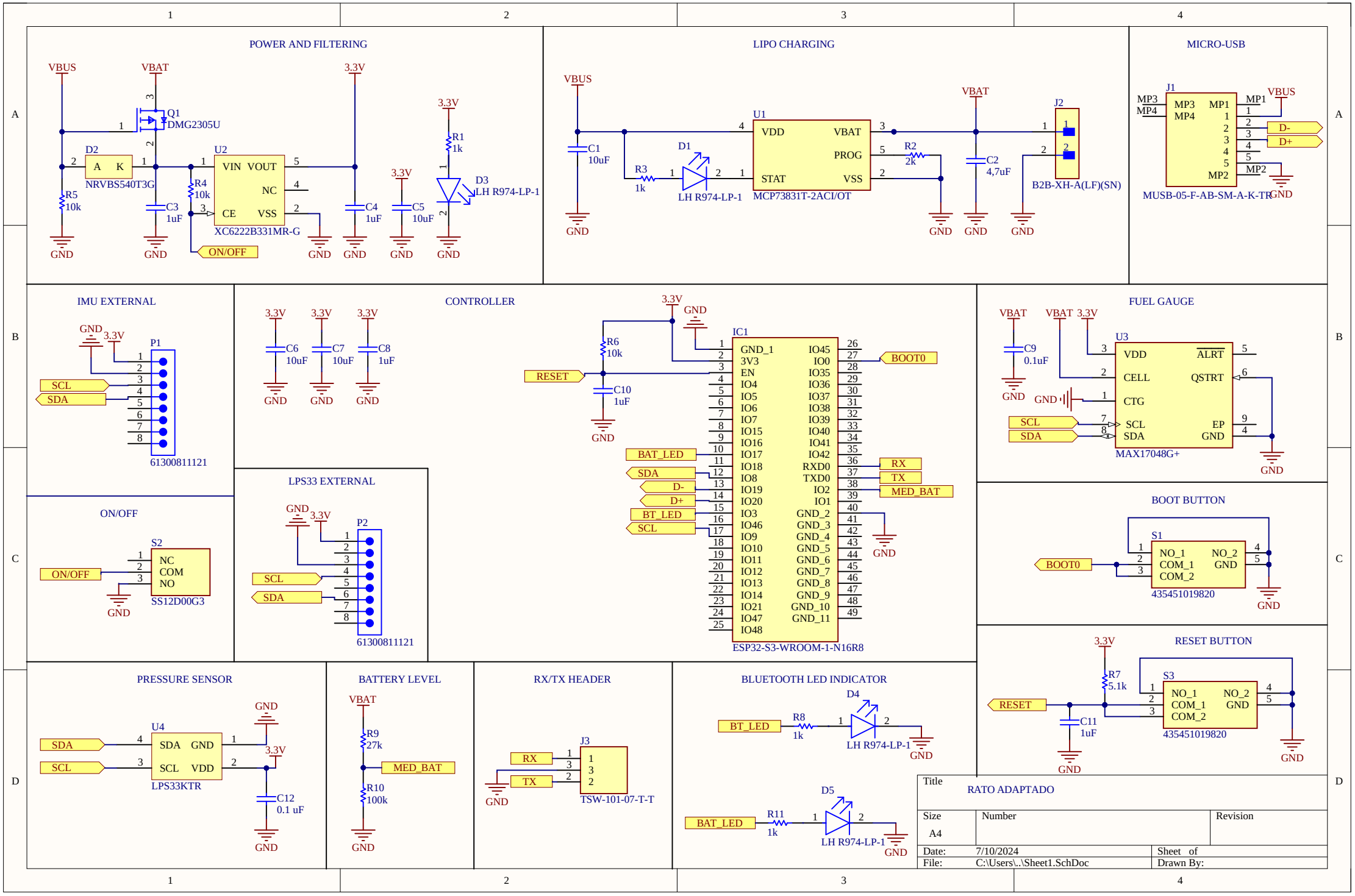
POWER AND FILTERING
VBUS
VBAT
3.3V
Q1
DMG2305U
D2
A K
NRVBS540T3G
R5
10k
R4
10k
C3
1uF
U2
VIN VOUT
NC
CE VSS
XC6222B331MR-G
ON/OFF
C4
1uF
C5
10uF
R1
1k
D3
LH R974-LP-1
GND
LIPO CHARGING
C1
10uF
R3
1k
D1
LH R974-LP-1
U1
VDD VBAT
PROG
STAT VSS
MCP73831T-2ACI/OT
R2
2k
C2
4,7uF
J2
B2B-XH-A(LF)(SN)
MICRO-USB
J1
MP3 MP1
MP4 MP4
MP2
MUSB-05-F-AB-SM-A-K-TR
D-
D+
IMU EXTERNAL
P1
SCL
SDA
61300811121
C6
10uF
C7
10uF
C8
1uF
CONTROLLER
R6
10k
C10
1uF
RESET
IC1
GND_1
3V3
EN
IO4
IO5
IO6
IO7
IO15
IO16
IO17
IO18
IO8
IO19
IO20
IO3
IO46
IO9
IO10
IO11
IO12
IO13
IO14
IO21
IO47
IO48
IO45
IO0
IO35
IO36
IO37
IO38
IO39
IO40
IO41
IO42
RXD0
TXD0
IO2
IO1
GND_2
GND_3
GND_4
GND_5
GND_6
GND_7
GND_8
GND_9
GND_10
GND_11
BOOT0
BAT_LED
RX
TX
MED_BAT
ESP32-S3-WROOM-1-N16R8
FUEL GAUGE
C9
0.1uF
U3
VDD ALRT
CELL QSTRT
CTG
SCL
SDA
EP
GND
MAX17048G+
ON/OFF
S2
NC
COM
NO
SS12D00G3
LPS33 EXTERNAL
P2
61300811121
BOOT BUTTON
S1
NO_1 NO_2
COM_1 GND
COM_2
435451019820
RESET BUTTON
R7
5.1k
C11
1uF
S3
435451019820
PRESSURE SENSOR
U4
SDA GND
SCL VDD
LPS33KTR
C12
0.1 uF
BATTERY LEVEL
R9
27k
R10
100k
MED_BAT
RX/TX HEADER
J3
TSW-101-07-T-T
BLUETOOTH LED INDICATOR
D4
R8
1k
LH R974-LP-1
D5
R11
1k
Title
RATO ADAPTADO
Size
A4
Number
Revision
Date: 7/10/2024
Sheet of
File: C:\Users\..\Sheet1.SchDoc
Drawn By:

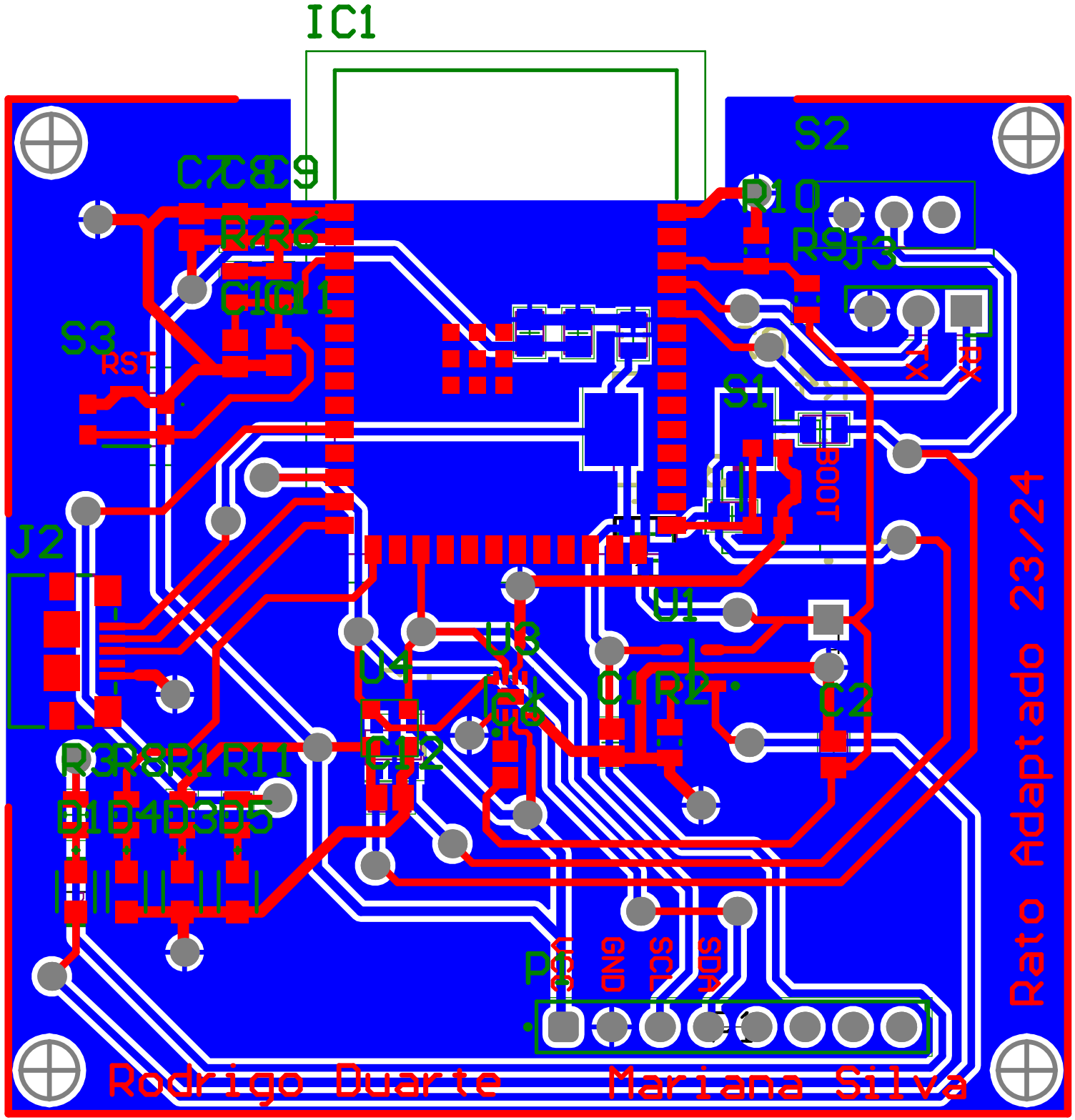
IC1
S2
C7
C8
C9
R7
R6
R10
R9
J3
C10
C11
S3
RST
TX
RX
S1
BOOT
J2
U1
U3
U4
C1
R2
C2
C6
C12
R3
R8
R1
R11
D1
D4
D3
D5
P3
3V3
GND
SCL
SDA
Rato Adaptado 23/24
Rodrigo Duarte
Mariana Silva

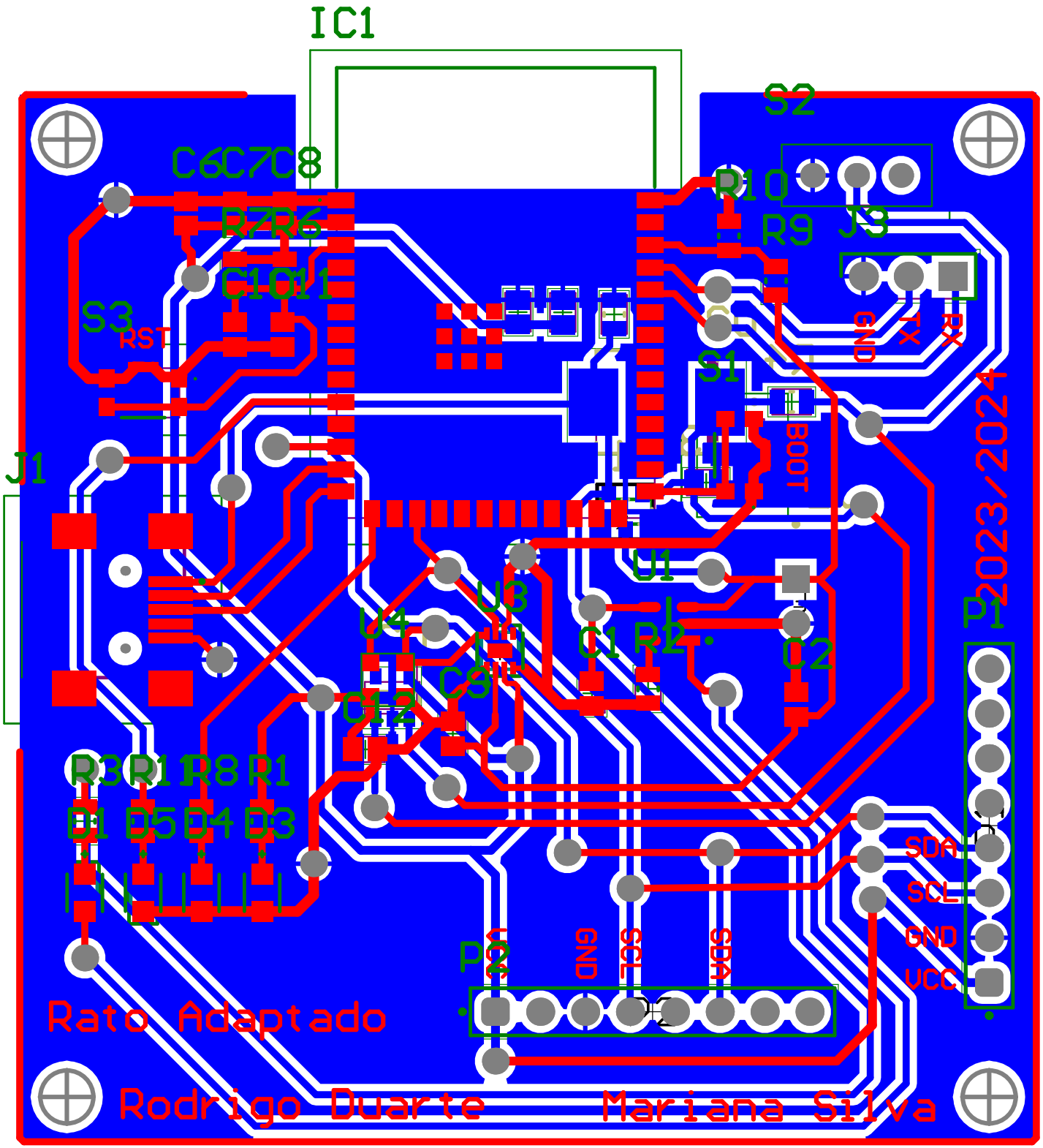
IC1
S2
C6C7C8
R10
R7R6
R9
J3
C10C11
S3
RST
GND
TX
RX
S1
BOOT
J1
U1
U3
U4
C1
R2
C2
C3
C12
P1
2023/2024
R3R1R8R1
D1 D5D4D3
SDA
SCL
GND
VCC
P2
GND
SCL
SDA
Rato Adaptado
Rodrigo Duarte
Mariana Silva