RASPBERRY PICO 2W RP2350 THT

SUPPLIER: RASPBERRY
MODEL: SC1634
PACKAGE: THT 40 pins
SIZE: 51.00 mm × 21.00 mm
PITCH: 2.54 mm

POWER SHIFT REGISTER (U1–U2)

SUPPLIER: TEXAS INSTRUMENTS
MODEL: TPIC6B595N
PACKAGE: PDIP 20 pins
SIZE: 25.40 mm × 6.35 mm
PITCH: 2.54 mm

LED (D1–D16)

SUPPLIER: HUIYUAN OPTO-ELECTRONIC
MODEL: 5034Y1D-ESB-E
COLOR: YELLOW
DIAMETER: 5 mm
LUMINOUS: 2000 – 3000 mcd
ANGLE: 40 – 60 deg

RESISTOR (R1–R16)

SUPPLIER: YAGO
MODEL: MF0207FTE52-160R
POWER RATING: 0.6 W
TOLERANCE: 1%
VALUE: 160 Ohms
SIZE: D2.40 x L6.30 mm

UNPOLARIZED CAPACITOR (C1–C7)

SUPPLIER: MURATA
MODEL: RDER71H104K0S1H03A
TYPE: CERAMIC XR7
CAPACITANCE: 100 nF (tol 10%)
VOLTAGE: 50 V
PITCH: 2.50 mm

POLARIZED CAPACITOR (C8)

SUPPLIER: PANASONIC
MODEL: EEUFR1E101B
TYPE: ELECTROLYTIC RADIAL
CAPACITANCE: 100 uF (tol 20%)
VOLTAGE: 25 V
SIZE: D6.30 x H11.20 mm
PITCH: 2.50 mm

PTC RESETTABLE FUSE (F1)

SUPPLIER: BOURNS
MODEL: MF-R050
POWER DISSIPATION: 0.75 W
VOLTAGE: 60 V
PITCH: 5.10 mm

PUSH BUTTON (SW1–SW2)

SUPPLIER: DIPTRONICS
MODEL: DIP DTS-62N
CONTACT RATING: 50 mA – 12V
HEIGHT: 5 mm
FORCE: 160 g (1.6 N)

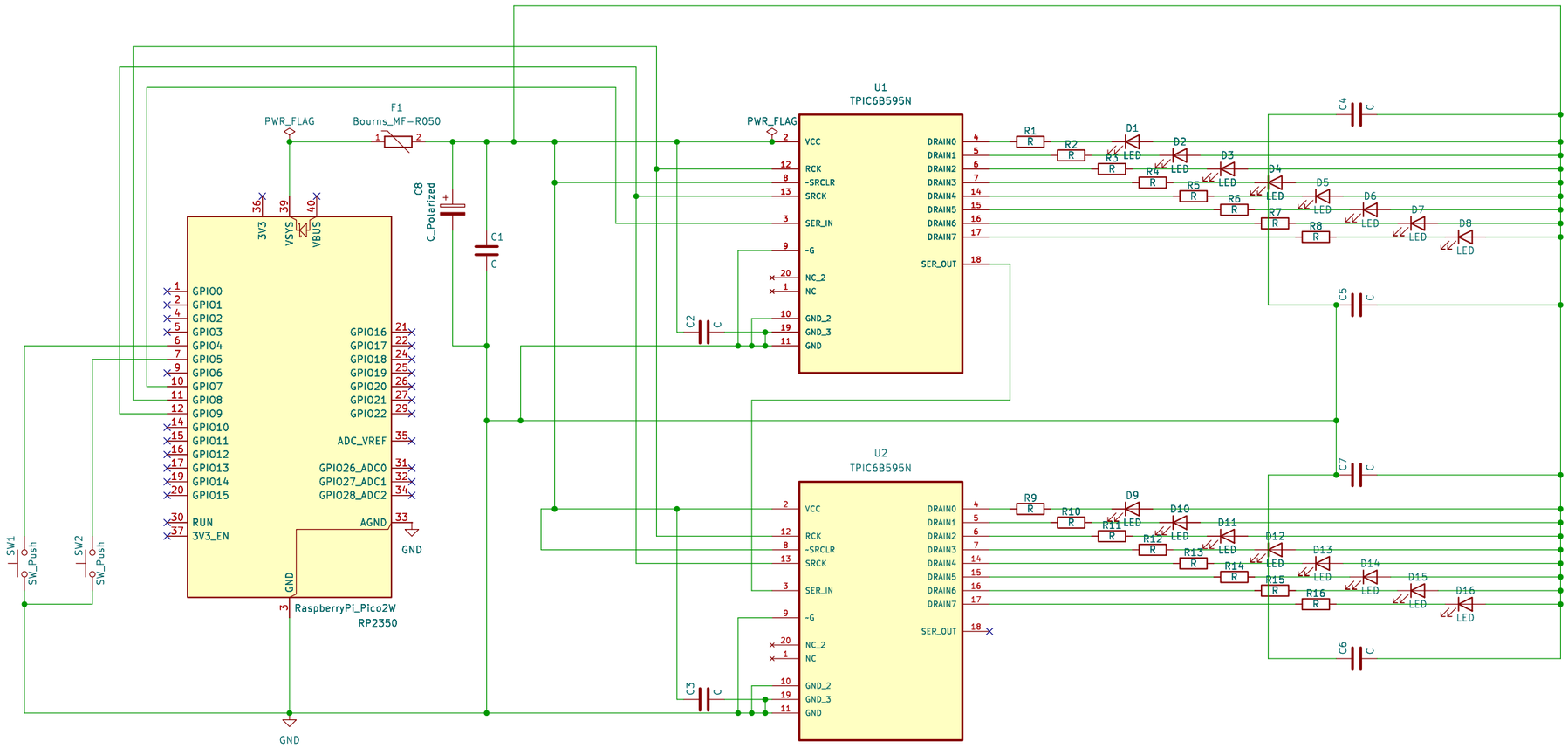

SPDX-License-Identifier: CC-BY-NC-SA-4.0
Creative Commons Attribution-NonCommercial-ShareAlike 4.0 International License
Copyright (c) RELEASE255

YOU ARE FREE TO:
- Share, copy and redistribute the material in any medium or format.
- Adapt, remix, transform, and build upon the material.

UNDER THE FOLLOWING TERMS:
- Attribution – You must give appropriate credit, provide a link to the license, and indicate if changes were made. You may do so in any reasonable manner, but not in any way that suggests the licensor endorses you or your use.
- NonCommercial – You may not use the material for commercial purposes.
- ShareAlike – If you remix, transform, or build upon the material, you must distribute your contributions under the same license as the original.
- No additional restrictions – You may not apply legal terms or technological measures that legally restrict others from doing anything the license permits.

NOTICES:
- You do not have to comply with the license for elements of the material in the public domain or where your use is permitted by an applicable exception or limitation.
- No warranties are given. The license may not give you all of the permissions necessary for your intended use. For example, other rights such as publicity, privacy, or moral rights may limit how you use the material.

To view a copy of this license, visit: http://creativecommons.org/licenses/by-nc-sa/4.0/

RELEASE255®

Sheet: /
File: ML01v01.kicad_sch

Title: ML01v01_THT

Size: A3	Date: 2026-01-11	Rev: B
KiCad E.D.A. 9.0.2		Id: 1/1