SAP BW/4HANA Content

SAP
April 2021

Disclaimer

The information in this presentation is confidential and proprietary to SAP and may not be disclosed without the permission of SAP. Except for your obligation to protect confidential information, this presentation is not subject to your license agreement or any other service or subscription agreement with SAP. SAP has no obligation to pursue any course of business outlined in this presentation or any related document, or to develop or release any functionality mentioned therein.

This presentation, or any related document and SAP's strategy and possible future developments, products and or platforms directions and functionality are all subject to change and may be changed by SAP at any time for any reason without notice. The information in this presentation is not a commitment, promise or legal obligation to deliver any material, code or functionality. This presentation is provided without a warranty of any kind, either express or implied, including but not limited to, the implied warranties of merchantability, fitness for a particular purpose, or non-infringement. This presentation is for informational purposes and may not be incorporated into a contract. SAP assumes no responsibility for errors or omissions in this presentation, except if such damages were caused by SAP’s intentional or gross negligence.

All forward-looking statements are subject to various risks and uncertainties that could cause actual results to differ materially from expectations. Readers are cautioned not to place undue reliance on these forward-looking statements, which speak only as of their dates, and they should not be relied upon in making purchasing decisions.

© 2020 SAP SE or an SAP affiliate company. All rights reserved. I PUBLIC

Table of Contents

SAP BW/4HANA Content
SAP BW/4HANA Content Introduction
SAP BW/4HANA Content Overview
SAP BW/4HANA Content Features
SAP BW/4HANA Content LSA++
Content Highlights
- SAP S/4HANA CDS-View based extraction
- SAP S/4HANA and SAP S/4HANA Cloud Content based on CDS-Views
- Business Content SAP S/4HANA Finance
- Business Content Service (SAP S/4HANA and SAP S/4HANA Cloud)
- Business Content SD (SAP S/4HANA and SAP S/4HANA Cloud)
- Business Content Inventory Management (MM-IM)
- Business Content SuccessFactors – Workforce Management
- Business Content SuccessFactors – Performance Management
- Business Content Master Data – Master Data Governance (MDG)
- Business Content Real Estate Management

Further Information Help, Notes

Business Content All Data Flows
- Business Content Sales and Distribution (SD)
- Business Content SD (SAP S/4HANA and SAP S/4HANA Cloud)
- Business Content Service (SAP S/4HANA and SAP S/4HANA Cloud)
- Business Content Plant Maintenance (PM)
- Business Content Customer Service (CS)
- Business Content Quality Management (QM)
- Business Content Material Management (MM)
- Business Content Inventory Management (MM-IM)
- Business Content Production Planning and Controlling (PP, PP-PI)
- Business Content Extended Warehouse Management (EWM)
- Business Content Finance – Accounts Receivable (FI-AR)
- Business Content Finance – Accounts Payable (FI-AP)
- Business Content Finance – Asset Accounting (FI-AA)
- Business Content Finance – General Ledger (FI-GL)
- Business Content SAP S/4HANA Finance
- Business Content Contract Accounting (FI-CA)
- Business Content Public Sector – Funds Management (PSM-FM)
- Business Content Controlling – Overhead Cost Controlling (CO-OM)
- Business Content Controlling – Product Cost Controlling (CO-PC)
- Business Content Enterprise Controlling – Profit Center Accounting (EC-PCA)
- Business Content Real Estate
- Business Content Master Data – Master Data Governance (MDG)
- Business Content Utilities

Appendix

© 2020 SAP SE or an SAP affiliate company. All rights reserved. I PUBLIC

SAP BW/4HANA Content

Introduction

Learn the deployment options of standard content in SAP BW/4HANA

Understand the key design principles

Discover the application components covered by SAP BW/4HANA content

© 2020 SAP SE or an SAP affiliate company. All rights reserved. I PUBLIC

SAP BW/4HANA Content Introduction

In a heterogenous system landscape a data warehouse enables customers to integrate and harmonize data from various sources. Providing Business Content as a part of our EDW solutions has been a differentiator for SAP since the early releases of SAP Business Warehouse (BW). **Business Content enables quick and cost-effective implementation as it provides a model that can be used as a guideline during implementation.**

The delivered standard data models are **intended as a foundation** for designing, modeling, and building your EDW, and while often adapted to customer needs, they **provide a jump start that facilitates faster and more consistent delivery of EDW projects**.

The SAP BW/4HANA Content was specifically designed to **leverage the SAP HANA capabilities in SAP BW/4HANA** following a consistent EDW reference architecture called LSA++ (Layered Scalable Architecture).

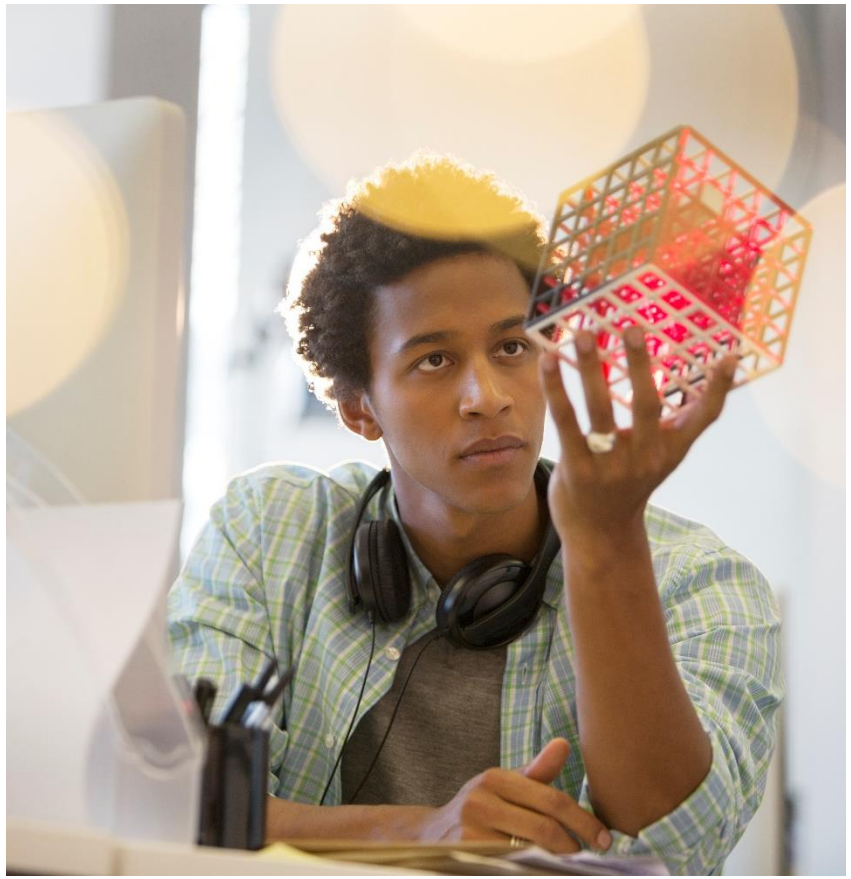

© 2020 SAP SE or an SAP affiliate company. All rights reserved. I PUBLIC

SAP BW/4HANA Content Overview

SAP BW/4HANA Content Overview

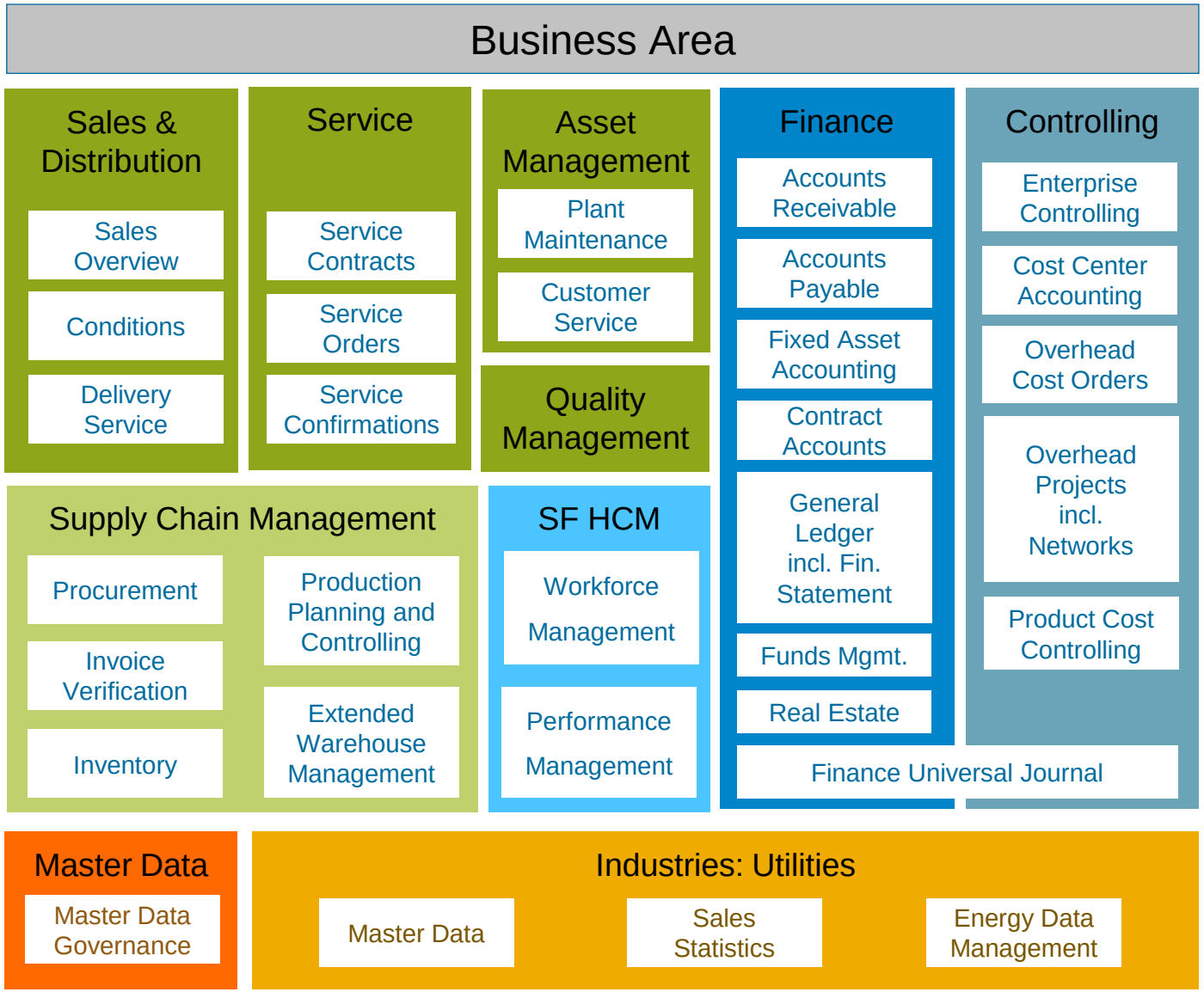

- Follows the LSA++ architecture
- Delivered Content offers more flexibility in data acquisition and reporting
- Provides higher level of detail (line items, …)

For exact availability of each content area please check the appendix

© 2020 SAP SE or an SAP affiliate company. All rights reserved. I PUBLIC

SAP BW/4HANA Content for
SAP ERP and SAP S/4 on Premise (based on ABAP DataSources)

SAP ERP
SAP S/4 OP

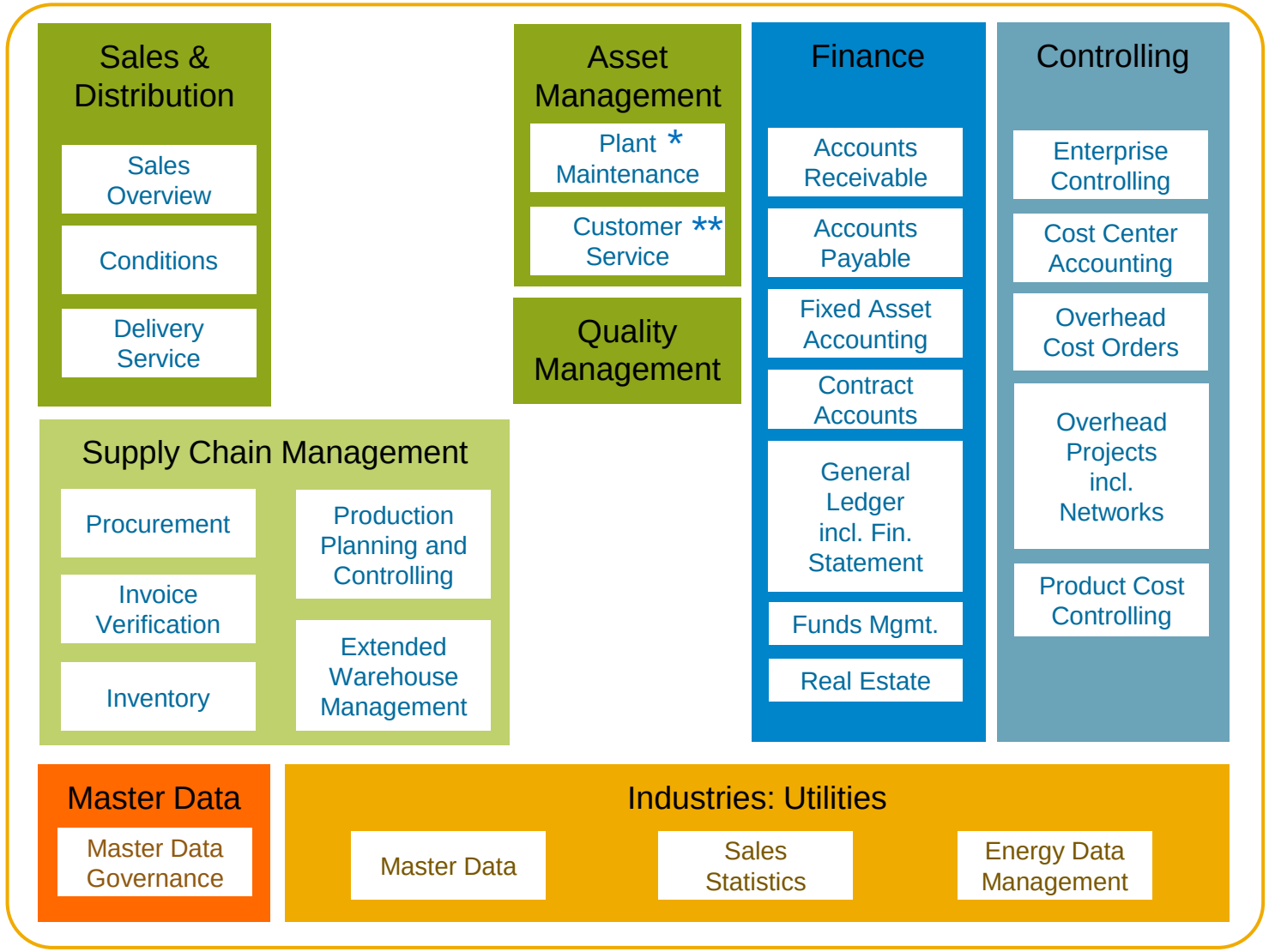

* Plant Maintenance: content data flows only partially available for SAP S/4HANA (see SAP Online Help, see also SAP Note 2299213)

** Customer Service is only available as a compatibility package for SAP S/4HANA with end-of-life currently announced for year 2025 (see SAP Note 253348).

Full list of ABAP DataSources whitelisted for SAP S/4HANA in SAP Note 2500202

© 2020 SAP SE or an SAP affiliate company. All rights reserved. I PUBLIC

SAP BW/4HANA Content for
SAP S/4HANA on Premise and SAP S/4HANA Cloud (based on CDS-Views)

SAP S/4 OP
SAP S/4 CE

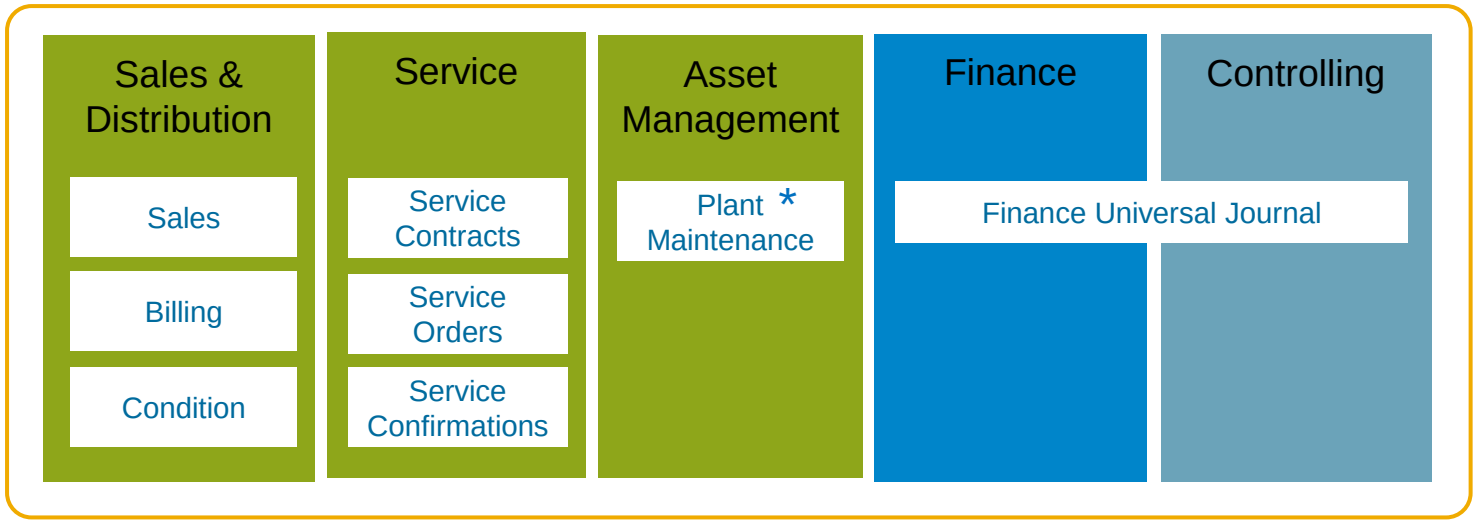

* Plant Maintenance: content data flows only partially available for SAP S/4HANA (see SAP Online Help, see also SAP Note 2299213)

List of CDS-Views for extraction available in SAP S/4HANA can be listed via the View Browser,
Starting from SAP S/4HANA 2020 and SAP S/4HANA Cloud Edition the CDS-View *I_DataExtractionEnabledView* can be used to identify CDS views available for data extraction.

© 2020 SAP SE or an SAP affiliate company. All rights reserved. I PUBLIC

SAP BW/4HANA Content for SAP SuccessFactors

SAP SuccessFactors

SF HCM

Workforce Management

Performance Management

available in BW/4HANA 2.0 only

© 2020 SAP SE or an SAP affiliate company. All rights reserved. I PUBLIC

SAP BW/4HANA Content Object Lists

>1,700 Metrics

	C	D	E	F	G	H
1	CompositeProvider Description	Technical Name Metric	KYF / RKF / CKF	Metric Name	First shipped with SAP BW/4HANA 1.0 >=	First shipped with SAP BW/4HANA 2.0 >=
649	PM: Fleet - Vehicle Consumption	0FLEET_DIST	KYF	Distance covered	SP02	SP00
650	PM: Fleet - Vehicle Consumption	0FUEL_MASS	KYF	Fuel Mass Quantity	SP02	SP00
651	PM: Fleet - Vehicle Consumption	0FUEL_VOL	KYF	Fuel Volume Quantity	SP02	SP00
652	PM: Fleet - Vehicle Consumption	0USINGTIME	KYF	Operating Time of the Capacity	SP02	SP00
653	PM: Order Costs and Asset Utilization	/IMO/V_PM07_CK0001	CKF	Cost/Util MPoint 1	SP02	SP00
654	PM: Order Costs and Asset Utilization	/IMO/V_PM07_CK0002	CKF	Cost/Util MPoint 2	SP02	SP00
655	PM: Order Costs and Asset Utilization	/IMO/V_PM07_RK0001	RKF	Actual External Procurement	SP02	SP00
656	PM: Order Costs and Asset Utilization	/IMO/V_PM07_RK0002	RKF	Actual Internal Activities	SP02	SP00
657	PM: Order Costs and Asset Utilization	/IMO/V_PM07_RK0003	RKF	Actual Warehouse Issue	SP02	SP00
658	PM: Order Costs and Asset Utilization	/IMO/V_PM07_RK0004	RKF	Total Actual Cost	SP02	SP00
659	PM: Order Costs and Asset Utilization	/IMO/V_PM07_RK0005	RKF	Plan External Procurement	SP02	SP00
660	PM: Order Costs and Asset Utilization	/IMO/V_PM07_RK0006	RKF	Plan Internal Activities	SP02	SP00
661	PM: Order Costs and Asset Utilization	/IMO/V_PM07_RK0007	RKF	Plan Warehouse Issue	SP02	SP00
662	PM: Order Costs and Asset Utilization	/IMO/V_PM07_RK0008	RKF	Total Planned Cost	SP02	SP00
663	PM: Order Costs and Asset Utilization	0AMOUNT	KYF	Amount	SP02	SP00
664	PM: Order Costs and Asset Utilization	0READSI1	KYF	Measured Value/Total Counter Reading in SI Unit 1	SP02	SP00
				Measured Value/Total Counter Reading in SI Unit 2	SP02	SP00
				Planned Work for Operation	SP02	SP00
				Number of Breakdowns	SP03	SP00
				Downtime for equipment	SP03	SP00
				Lead time of the notification	SP03	SP00
				Number of notifications	SP03	SP00
				No. of notifications with status outstanding	SP03	SP00
				Number of notifications completed on schedule	SP03	SP00
				Number of tasks with status 'outstanding' or 'released'	SP03	SP00
				No. of tasks with status successful	SP03	SP00

>120 Queries

1	CompositeProvid	CompositeProvider Description	Query	Query Description	First shipped with BW4CONT 1.0 >=	First shipped with BW4CONT 2.0 >=
35	/IMO/V_EWM21	EWM: Storage Bins	/IMO/V_EWM21_Q0001	EWM: Warehouse Capacity Level - Occupied Bins	SP05	SP00
36	/IMO/V_EWM30	EWM: Transportation Units	/IMO/V_EWM30_Q0001	EWM: TUs - Total, Weight, Volume, and Time	SP05	SP00
37	/IMO/V_EWM40	EWM: Measurement Service Results	/IMO/V_EWM40_Q0001	EWM: Results Measurement Services	SP05	SP00
38	/IMO/V_EWM50	EWM: Executed Workload	/IMO/V_EWM50_Q0001	EWM: Executed Workload	SP05	SP00
39	/IMO/V_FIAA01	FI-AA: Transactions, Annual and Period Values	/IMO/V_FIAA01_Q0001	FI-AA: Asset History Sheet (per Period)	SP00	SP00
40	/IMO/V_FIAA01	FI-AA: Transactions, Annual and Period Values	/IMO/V_FIAA01_Q0002	FI-AA: Transaction Data Report	SP00	SP00
41	/IMO/V_FIAA01	FI-AA: Transactions, Annual and Period Values	/IMO/V_FIAA01_Q0003	FI-AA: Depreciations Posted	SP00	SP00
42	/IMO/V_FIAA01	FI-AA: Transactions, Annual and Period Values	/IMO/V_FIAA01_Q0004	FI-AA: Comparison of Values	SP00	SP00
43	/IMO/V_FIAP01	FI-AP: Accounts Payable	/IMO/V_FIAP01_Q0001	FI-AP: Overdue Analysis	SP00	SP00
44	/IMO/V_FIAP01	FI-AP: Accounts Payable	/IMO/V_FIAP01_Q0002	FI-AP: Vendor Due Date Analysis	SP00	SP00
45	/IMO/V_FIAR03	FI-AR: FI Accounts Receivable (BW replicated)	/IMO/V_FIAR03_Q0001	FI-AR: Payment History	SP00	SP00
46	/IMO/V_FIAR03	FI-AR: FI Accounts Receivable (BW replicated)	/IMO/V_FIAR03_Q0002	FI-AR: Payment Reliability Trend	SP00	SP00
47	/IMO/V_FIAR03	FI-AR: FI Accounts Receivable (BW replicated)	/IMO/V_FIAR03_Q0003	FI-AR: Overdue	SP00	SP00
48	/IMO/V_FICA04	FI-CA: Invoicing Data	/IMO/V_FICA04_Q0001	FI-CA: Analysis of Billing Data	SP00	SP00
49	/IMO/V_FICA05	FI-CA: Business Partner Items	/IMO/V_FICA05_Q0001	FI-CA: Open Items 30-60-90	SP00	SP00
50	/IMO/V_FICA06	FI-CA: Returns	/IMO/V_FICA06_Q0001	FI-CA: Returns	SP00	SP00
51	/IMO/V_FICA07	FI-CA: Payments	/IMO/V_FICA07_Q0001	FI-CA: Payments	SP00	SP00
52	/IMO/V_FIGL01	FI-GL: General Ledger	/IMO/V_FIGL01_Q0001	FI-GL: Actuals Balance and Flow Comparison	SP00	SP00
53	/IMO/V_FIGL01	FI-GL: General Ledger	/IMO/V_FIGL01_Q0002	FI-GL: Actuals/Plan/Budget: Balance and Flow Comparison	SP00	SP00
54	/IMO/V_FIGL02	FI-GL: General Ledger (New)	/IMO/V_FIGL02_Q0001	FI-GL: New GL Actuals Balance and Flow Comparison	SP00	SP00
55	/IMO/V_FIGL02	FI-GL: General Ledger (New)	/IMO/V_FIGL02_Q0002	FI-GL: New GL Actuals/Plan/Budget: Balance & Flow Comparison	SP00	SP00
56	/IMO/V_FIGL03	FI-GL: Financial Statements	/IMO/V_FIGL03_Q0001	FI-GL: Financial Statement	SP03	SP00
57	/IMO/V_UCDM01	UCDM: Meter Reading Data	/IMO/V_UCDM01_Q0001	UCDM: Meter Readings Historical View	SP00	SP00

Where can I find this overview list?

Attachment in SAP Note

[2785514 - FAQ: SAP BW/4HANA Content]

© 2020 SAP SE or an SAP affiliate company. All rights reserved. I PUBLIC

SAP BW/4HANA Content What’s new

- SAP S/4HANA - Finance (FI): Universal Journal Content and Master Data*
- SAP S/4HANA - Service: Service Contract, Order and Confirmation *
- SAP S/4HANA - Sales & Distribution (SD): Sales Orders and Condition, Billing Documents and Condition Content *
- SAP SuccessFactors Employee Central & Performance Management **
- SAP S/4HANA: Master Data*

* based on Core Data Services (CDS) view extraction for SAP S/4HANA and SAP S/4HANA Cloud
** available in BW/4HANA 2.0 only

© 2020 SAP SE or an SAP affiliate company. All rights reserved. I PUBLIC

SAP BW/4HANA Content Outlook

- SAP S/4HANA Transportation Management (TM): Transportation Order Root and Item*

* based on Core Data Services (CDS) view extraction

© 2020 SAP SE or an SAP affiliate company. All rights reserved. I PUBLIC

SAP BW/4HANA Content Add-Ons

SAP BW/4HANA Content consists of 2 Add-Ons:

delivery of SPs incl. new content

SAP BW/4HANA **Content** Add-On (BW4CONT)

- SAP HANA-opt. BW Content
- InfoSources, Transformations for data provisioning for the InfoObjects

SAP BW/4HANA **Content BASIS** Add-On (BW4CONT**B**)

- InfoObjects
- InfoAreas, Variables
- Conversion exits, Master data read classes

SAP BW/4HANA

© 2020 SAP SE or an SAP affiliate company. All rights reserved. I PUBLIC

Differences to SAP HANA-optimized BI Content delivered with BI CONT 7.57

SAP BW/4HANA Content includes Business Content for additional business areas:

- Plant Maintenance (including CDS based extraction for SAP S/4HANA and SAP S/4HANA Cloud)
- Customer Services
- Quality Management
- Production Planning and Controlling
- Extended Warehouse Management
- Product Cost Controlling, Controlling - Overhead Projects
- Real Estate Management (including IFRS16)
- Success Factors – Workforce Management, Performance Management
- SD Sales, Billing and Condition Content (for SAP S/4HANA and SAP S/4HANA Cloud based on CDS-Views)
- Service (for SAP S/4HANA and SAP S/4HANA Cloud based on CDS-Views)
- Funds Management, including Retraction of Budget Plan data
- Finance Universal Journal (for SAP S/4HANA and SAP S/4HANA Cloud based on CDS-Views)
- Master Data (for SAP S/4HANA and SAP S/4HANA Cloud based on CDS-Views)

Further differences can be found in SAP Note 2397520.

© 2020 SAP SE or an SAP affiliate company. All rights reserved. I PUBLIC

SAP BW/4HANA Content Content Usage

	Customer usage of SAP delivered Business Content	Custom-built Content	Required
Scenario A	BW DataSources	InfoObjects, Open ODS Views, ADSOs, Transformations, CompositeProviders, Variables, Queries	Enable BW DataSources for ODP (SAP Note 2232584) S/4HANA Whitelisted BW DataSources (SAP Note 2500202)
Scenario B	BW DataSources, InfoObjects ‚as is' or ‚as template'	Open ODS Views, ADSOs, Transformations, CompositeProviders, Variables, Queries	In addition: SAP BW/4HANA Content BASIS Add-On (BW4CONT**B**)
Scenario C	BW DataSources, InfoObjects, ADSOs, Transformations, CompositeProviders, Variables, Queries ‚as is' or ‚as template'	As required	In addition: SAP BW/4HANA Content Add-On (BW4CONT)

© 2020 SAP SE or an SAP affiliate company. All rights reserved. I PUBLIC

SAP BW/4HANA Content Features

SAP BW/4HANA Content Features Modeling Entities

Content built with the modeling entities

- CompositeProvider
- BAdI Provider
- Advanced DataStore Object

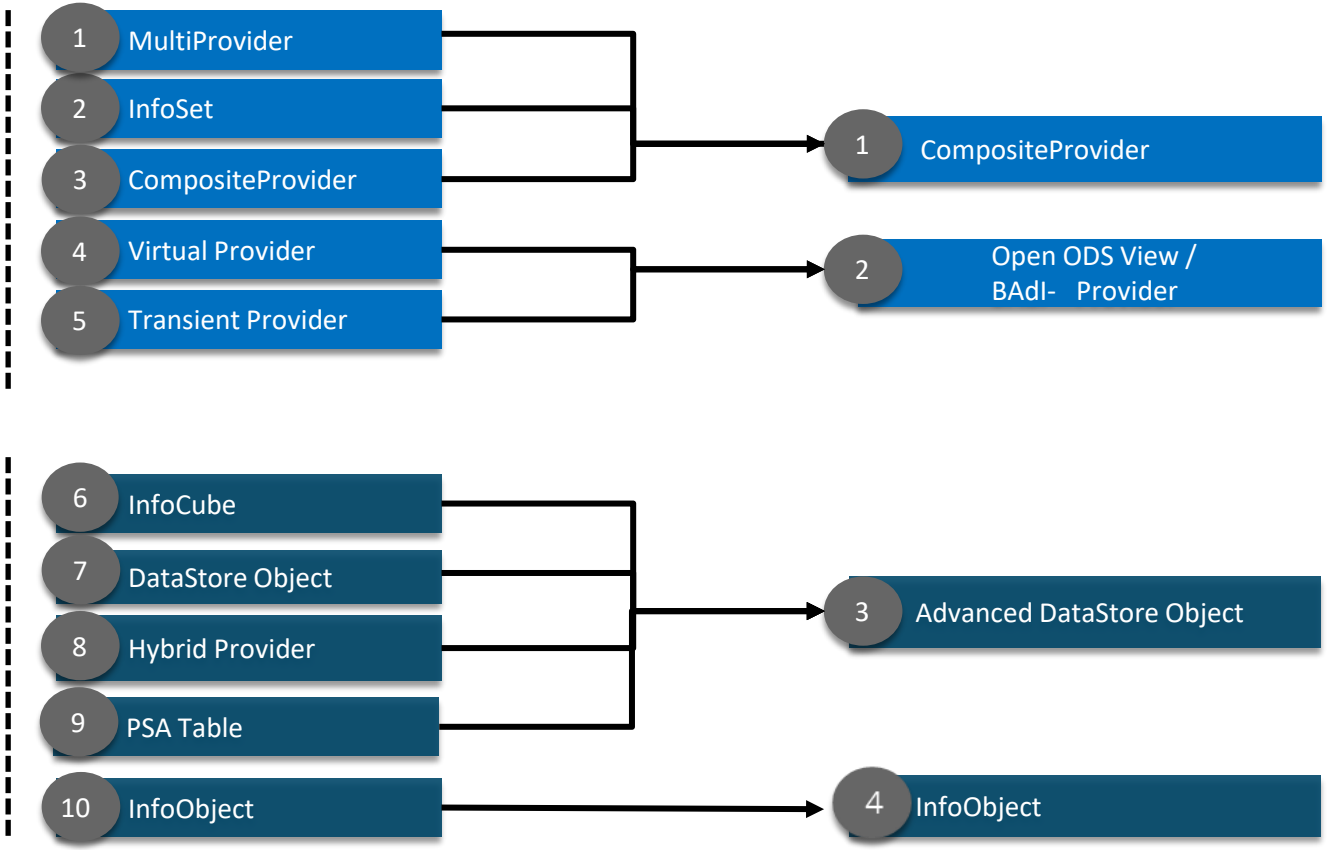

© 2020 SAP SE or an SAP affiliate company. All rights reserved. I PUBLIC

SAP BW/4HANA Content Features Variables

The Content Add-on offers a comprehensive set of variables (characteristic variables, SAP Exit variables, text variables) with consistent naming conventions (SAP Note 2395579). Distributed among DW4CORE, BW4CONTB and BW4CONT.

	A	B
1	Technical Name	Variable Description
52	0CXPO_CQQ1CY	First Quart
53	0CURMEM_CALWEEK	CURRENT M
54	0CWEEK	Current ca
55	0CIIO_CALYEAR	Calendar Y
56	0CURMEM_CALYEAR	CURRENT M
57	0CYEAR	Current ca
58	0CXPM_CHRT_ACCTS	Chart of Ac

			Type of Variable	Processing Type	Select Parameters	Entry Required	Underscore	Meaningful Name/Description
Position (max 20)		1	2	3	4	5	6	7-20 (14 char)
		0	C [Characteristic Value]	I [User Entry / Default Value]	P [Single Value (Parameters)]	M [Mandatory Variable Entry, Initial Value allowed]	_	dddddddddddddd
			N [Hierachy Node]	R [Replacement Path]	S [Selection Option]	O [Optional Variable Entry]		
			T [Text]	E [SAP exit - Input Ready]	I [Interval]	N [Mandatory, Initial Value not allowed]		
			F [Formula]	X [SAP exit - No Input]	M [Several Single Values]			
			H [Hierarchy]	A [Authorization - No Input]				
				B [Authorization - Input Ready]				
Examples	0CISM_CALMONTH	0	C	I	S	M	_	CALMONTH
	0NIPO_WBS_ELEMT	0	N	I	P	O	_	WBS_ELEMT
	0TXPO_FIBUCKET0	0	T	X	P	O	_	FIBUCKET0

© 2020 SAP SE or an SAP affiliate company. All rights reserved. I PUBLIC

SAP BW/4HANA Content Features Time Characteristics

Streamlined persistence for time characteristics by making use of 0CALDAY navigational attributes. No need to decide which date characteristic is mapped into 0CALDAY/ -MONTH / -YEAR as each date characteristic can support all time granularities by navigation attributes. For 0FISC* characteristics, this needs to be done on customer basis due to fiscal year variant.

Attributes: Time Characteristic 0CALDAY

Attributes

Filter Pattern

Display and Navigation Attributes (7)

Navigation Attribute	Name	Time-Depe
☑	[0CALMONTH] Calendar Year/M...	false
☑	[0CALMONTH2] Calendar month	false
☑	[0CALYEAR] Calendar Year	false
☑	[0CALWEEK] Calendar Year/Week	false
☑	[0HALFYEAR1] Halfyear	false
☑	[0CALQUARTER] Calendar Year/...	false
☑	[0CALQUART1] Quarter	false

Output: /IMO/V_EWM01

Provider Fields

Filter pattern

View Field	Associated Object
[TIM] Time Characteristics	
[0WM_BBDSLED] Best Before Date / Shelf Li	0WM_BBDSLED
[0CALMONTH] Calendar Year/Month	
[0CALYEAR] Calendar Year	
[0CALWEEK] Calendar Year/Week	
[0WM_COMPDAT] Completion Date	0WM_COMPDAT
[0CALMONTH] Calendar Year/Month	
[0CALYEAR] Calendar Year	
[0CALWEEK] Calendar Year/Week	
[0WM_COMPTIM] Completion Time	0WM_COMPTIM
[0WM_GRDAT] Goods Receipt Date	0WM_GRDAT
[0CALMONTH] Calendar Year/Month	
[0CALYEAR] Calendar Year	
[0CALWEEK] Calendar Year/Week	
[0WM_GRTIM] Goods Receipt Time	0WM_GRTIM
[0WM_PLDELDT] Planned Delivery Date	0WM_PLDELDT

© 2020 SAP SE or an SAP affiliate company. All rights reserved. I PUBLIC

SAP BW/4HANA Content Features Data Flows

Business Content areas grouped into Data Flows.

Data Flows delivered for all Content areas.

Easy identification of related objects.

Faster Content installation in Transaction RSOR by directly selecting a Data Flow object. Only necessary objects for the Data Flow are collected for installation.

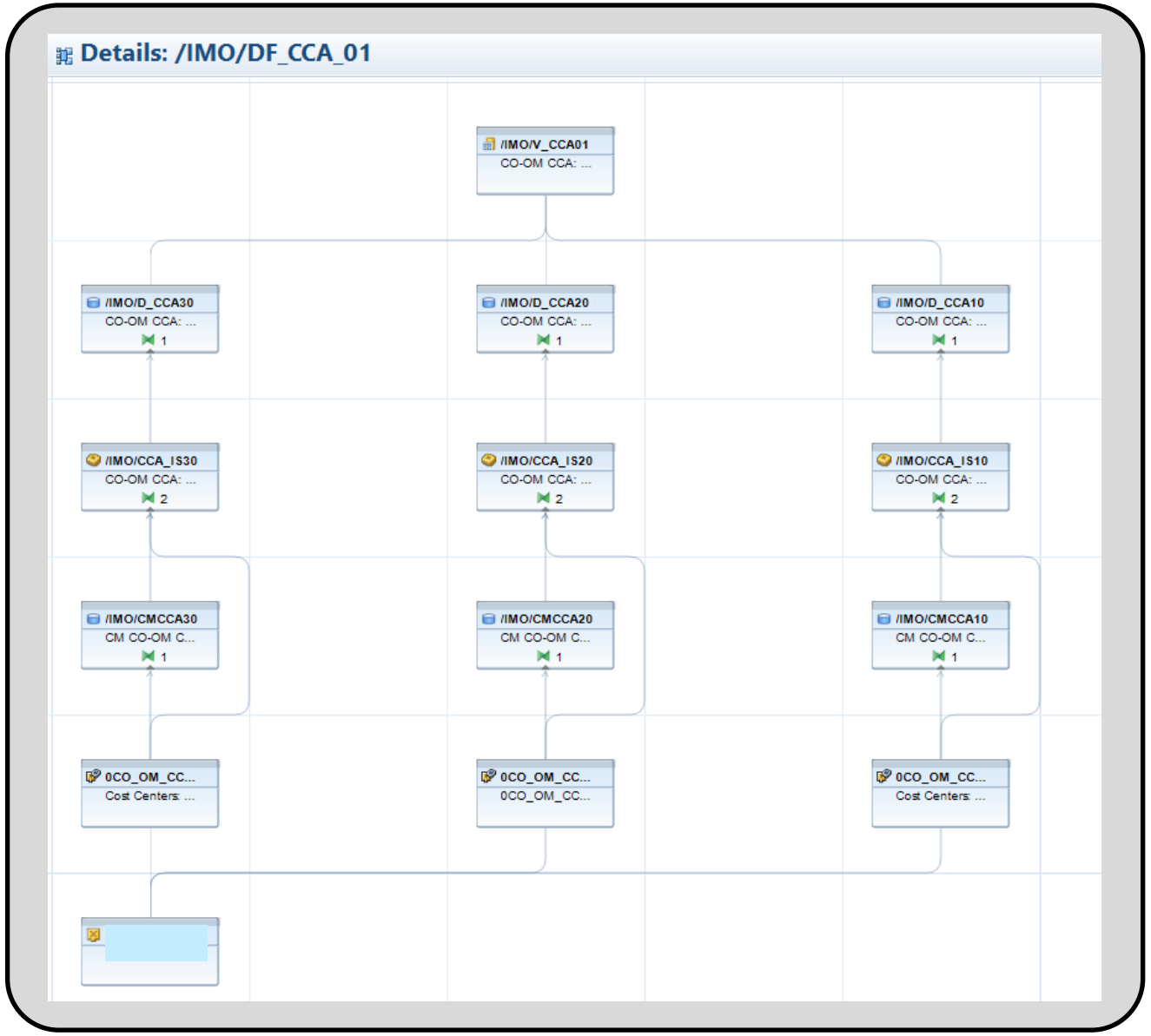

DTPs hidden in screenshot

© 2020 SAP SE or an SAP affiliate company. All rights reserved. I PUBLIC

SAP BW/4HANA Content Features Data Flows – DTPs and Process Chains

Non-persistent DTPs included as proposals

Create DTPs from this proposal per right mouse click

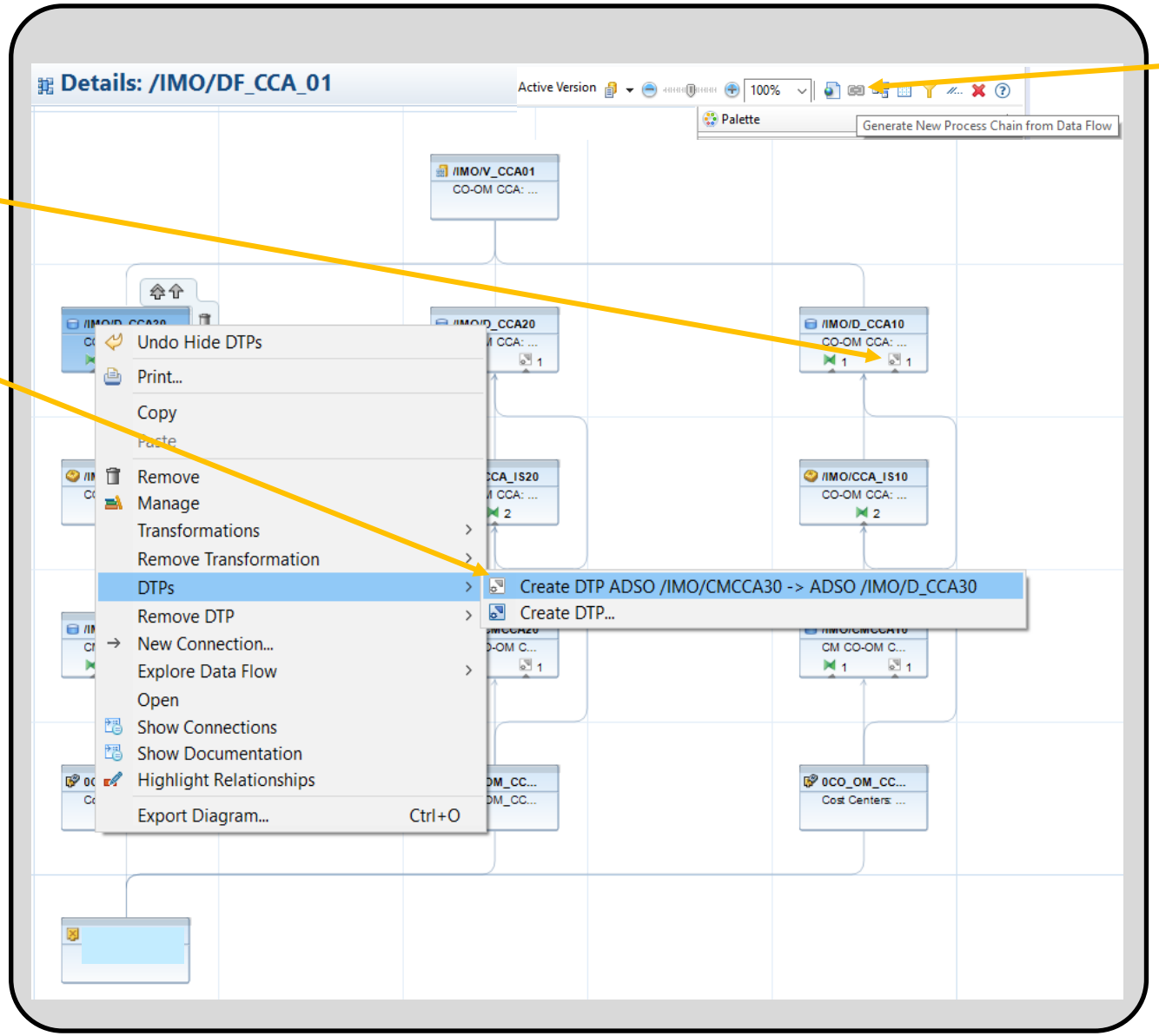

Generate Process Chain from Data Flow

(new feature in SAP BW/4HANA 2.0 SP04)

© 2020 SAP SE or an SAP affiliate company. All rights reserved. I PUBLIC

SAP BW/4HANA Content LSA++

SAP BW/4HANA Layered Scalable Architecture++

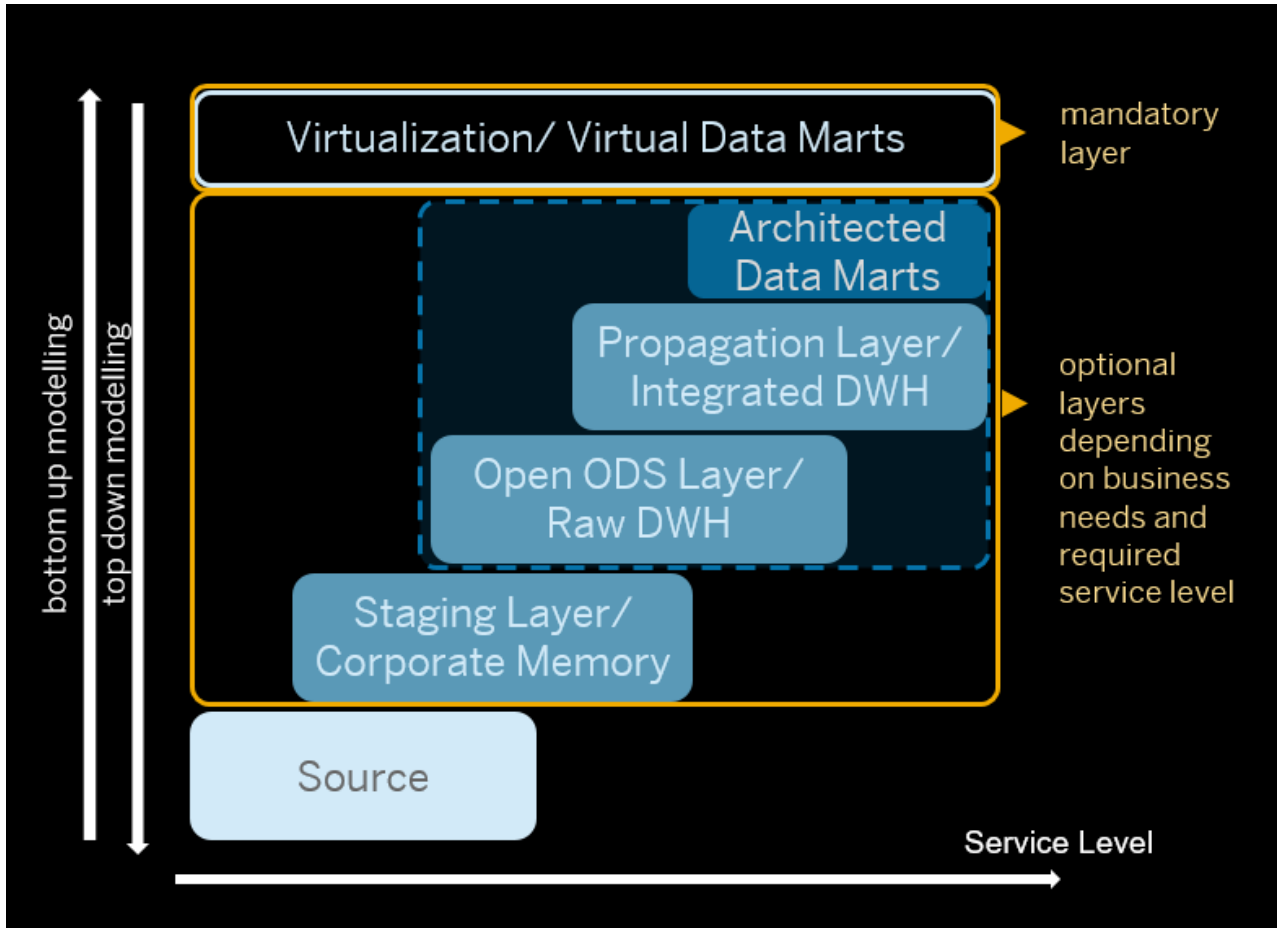

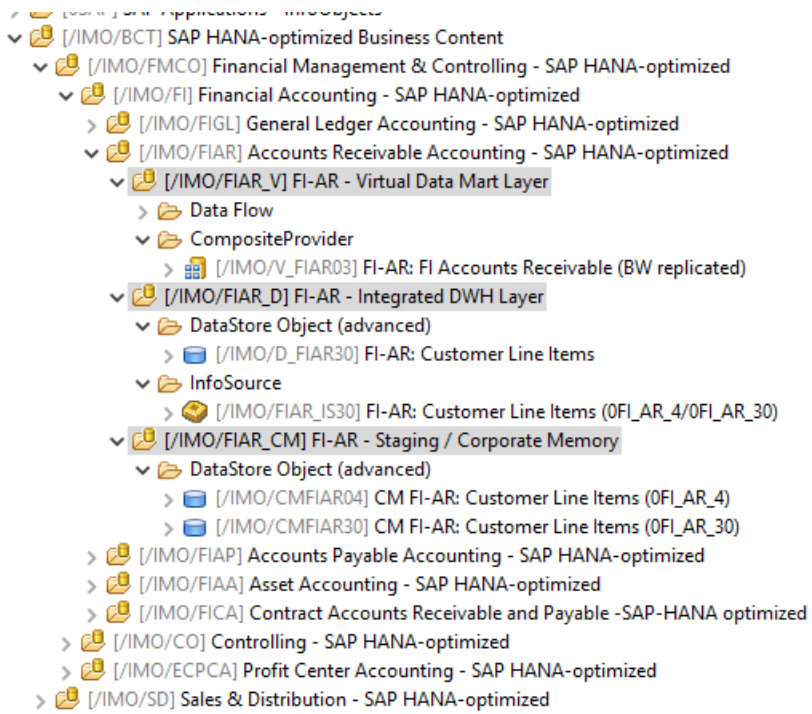

© 2020 SAP SE or an SAP affiliate company. All rights reserved. I PUBLIC

LSA++ main aspects Example Dataflow FI - Accounts Payable

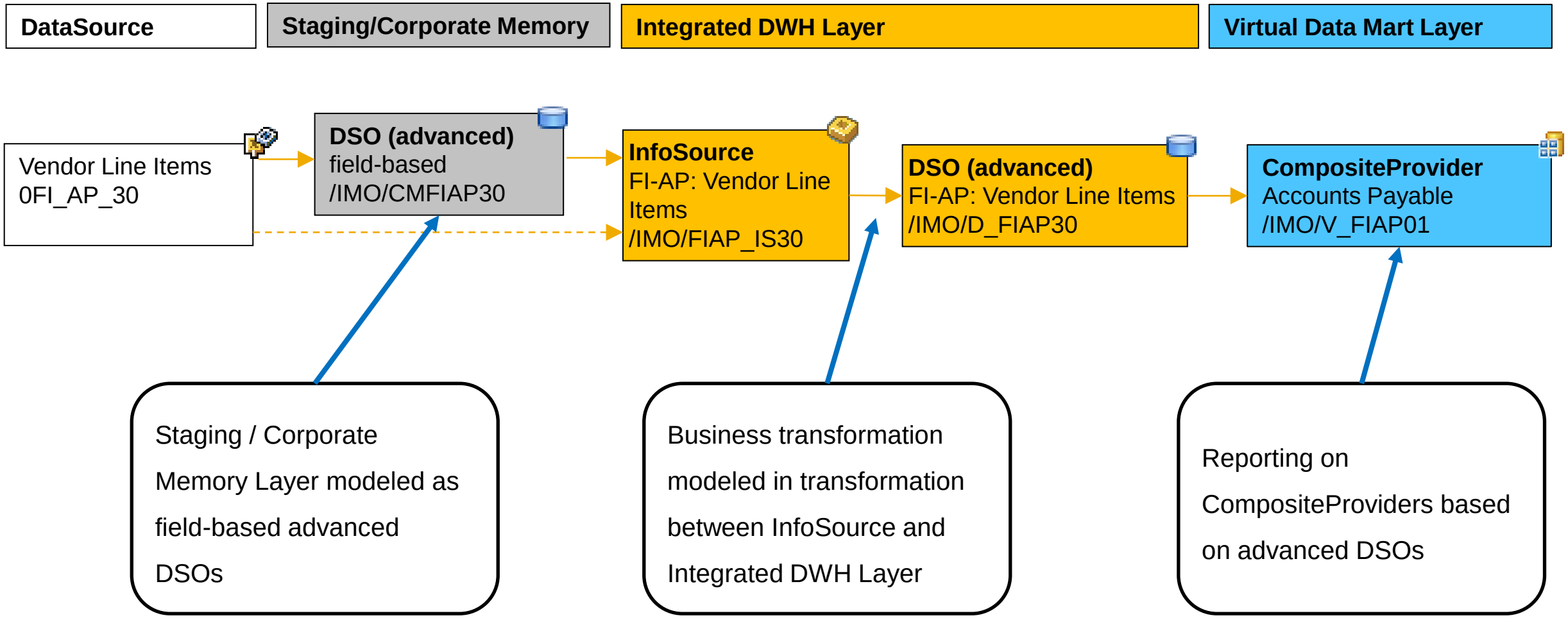

© 2020 SAP SE or an SAP affiliate company. All rights reserved. I PUBLIC

SAP BW/4HANA Content Naming Conventions

Naming conventions used throughout the content data models

Layer	Object	Technical Name	Example
Staging/Corporate Memory Layer	DataStore Object	/IMO/CM<*InfoArea*>nn /IMO/C_<*InfoArea*>nn	/IMO/CMPUR11 (if based on an ODP BW DataSource) /IMO/C_PUR11 (if based on an ABAP CDS View DataSource)
Integrated DWH Layer	InfoSource	/IMO/<*InfoArea*>_ISnn	/IMO/PUR_IS11 **i Note** The long description of the InfoSource contains the technical name of the corresponding DataSource. For example: MM-PUR: Purchase Data Item (2LIS_02_ITM)
	DataStore Object	/IMO/D_<*InfoArea*>nn	/IMO/D_PUR11
Virtual Data Mart Layer	CompositeProvider	/IMO/V_<*InfoArea*>nn	/IMO/V_PUR01
	Data Flow	/IMO/DF_<*InfoArea*>_nn /IMO/DF_<*InfoArea*>_nn_C	/IMO/DF_PUR01 (if based on an ODP BW DataSource) /IMO/DF_PUR_01_C (if based on an ABAP CDS View DataSource)

© 2020 SAP SE or an SAP affiliate company. All rights reserved. I PUBLIC

SAP BW/4HANA Content Design principles

Objective	Measure (examples only)
Less persistencies, less data	- Virtualize logic in Virtual Data Mart Layer (e.g. CompositeProvider) - Skip unnecessary persistencies / DataMart DSOs - Virtualize Time Characteristics based on 0CALDAY - Use of transitive attributes
Better data load performance	- Enable HANA-push down e.g. by using formulas instead of ABAP in Transformations
Better report performance	- Keeping performance in mind when implementing queries - Filter selection to reduce result set - High aggregation of first query result set
More flexibility in reporting	- Virtualize logic in Virtual Data Mart Layer - Document level information instead of aggregates - Use of Restricted and Calculated KeyFigures instead of persisted KeyFigures
More flexibility in data acquisition	- Add field-based Staging / Corporate Memory Layer - Define Business Logic only in Transformation between InfoSource and Integrated DWH Layer aDSOs
Simple and easy to understand	- Good documentation (SAP Online Help and ABAP Code in-place commentary) - Skip „nice-to-have“ features in straight forward content - More transparent transformations (no 3.x migrated update rules)

Example: FI - Asset Accounting
Comparison Classic BW Content with HANA-optimized BW Content

Classic BW Content FI-AA

- 8 Persistencies
- 9 Data Loads with dependencies
- 4 InfoProvider for reporting

Data Load cycle in SAP BW
5 million records 0FI_AA_11
12 million records 0FI_AA_12)
~ 1:21 hours

Data Load cycle in SAP BW on HANA
5 million records 0FI_AA_11
12 million records 0FI_AA_12)
~ 57 minutes

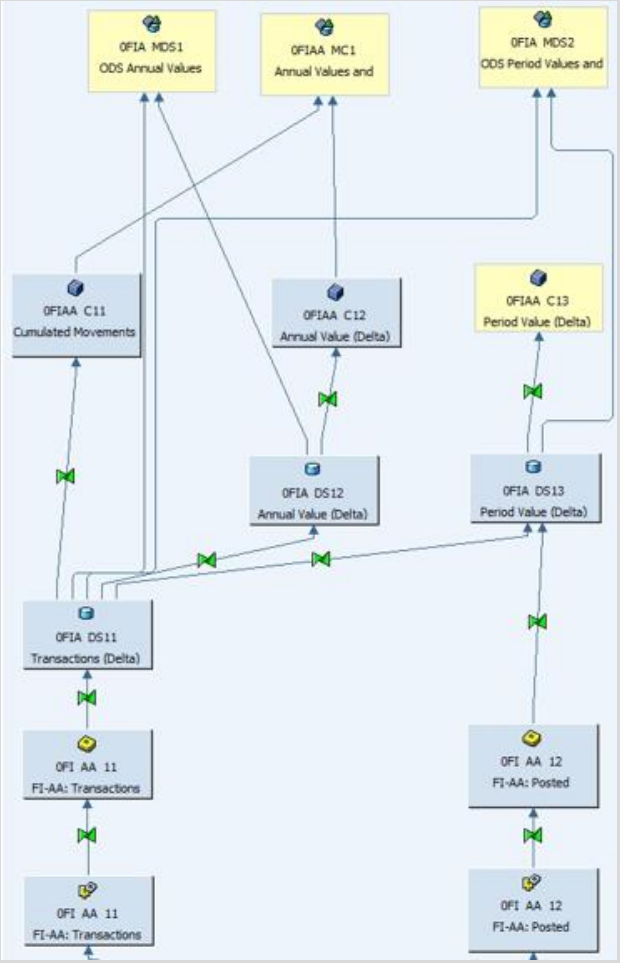

HANA-optimized BW Content FI-AA

- 4 Persistencies
- 5 Data Loads, less dependencies
- 1 InfoProvider for reporting

Data Load cycle in SAP BW/4HANA
5 million records 0FI_AA_11
12 million records 0FI_AA_12
~ 20 minutes

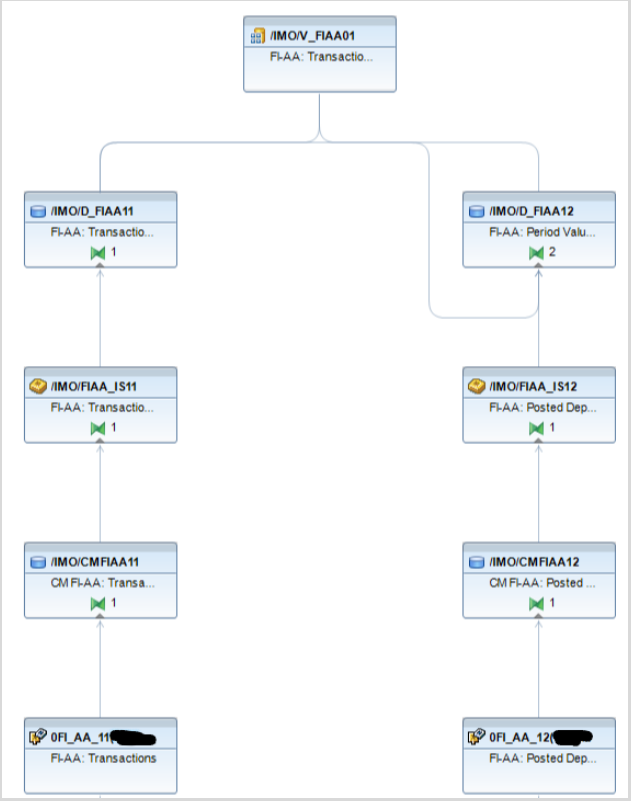

© 2020 SAP SE or an SAP affiliate company. All rights reserved. I PUBLIC

Content Highlights

SAP BW/4HANA Content Overview 2.0

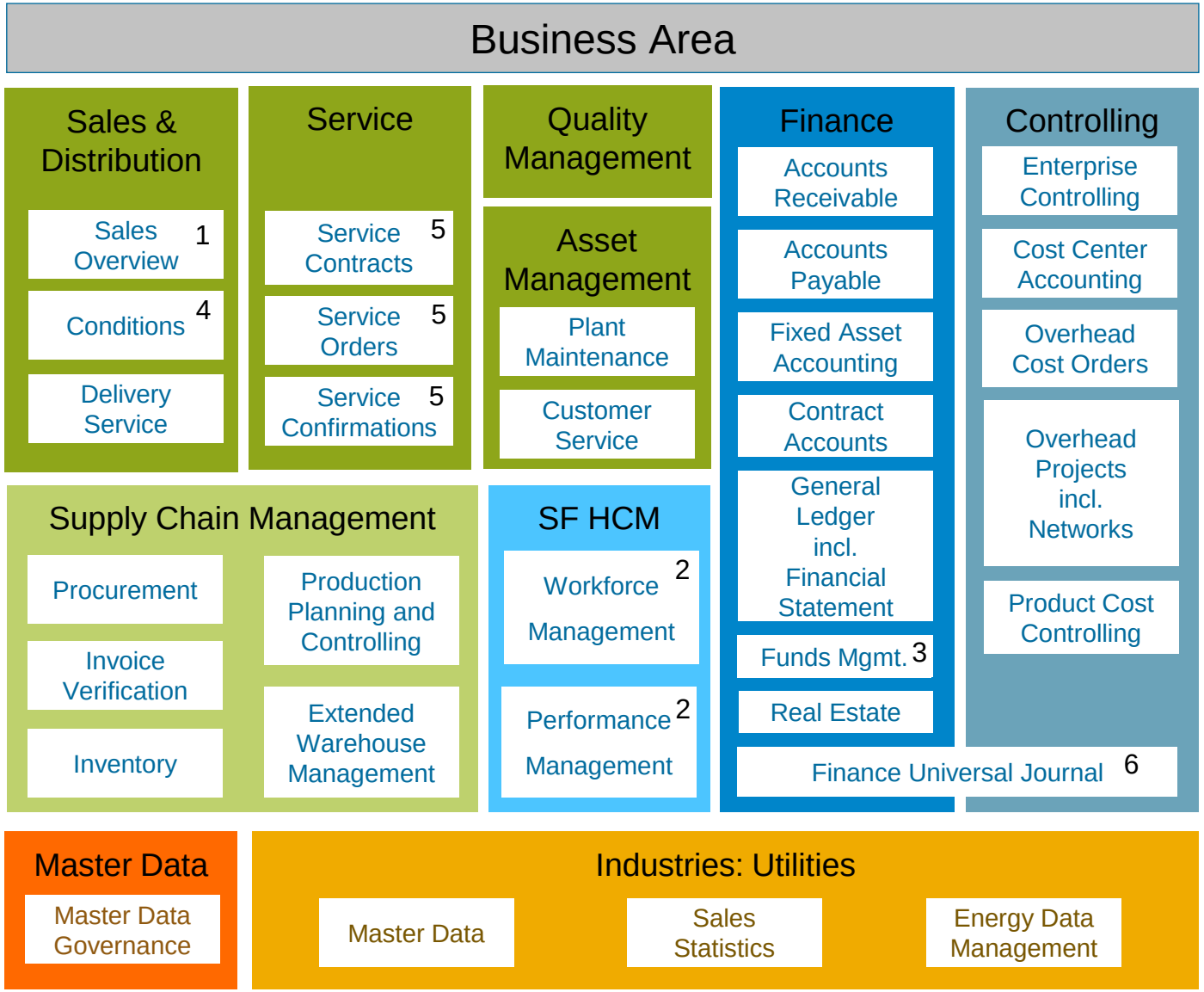

1 New SD-Billing Content for SAP S/4HANA delivered with BW4CONT 200 SP01, SD-Sales Content for SAP S/4HANA with BW4CONT 200 SP02

2 New Performance Management Content for SAP SuccessFactors with BW4CONT 200 SP01

Enhanced Workforce Management Content for SAP SuccessFactors with BW4CONT 200 SP01

3 Public Sector – Funds Management Content with BW4CONT 200 SP02, Retractor delivery with BW4CONT200 SP03

4 New SD Sales and Billing Conditions Content for SAP S/4HANA delivery with BW4CONT 200 SP03

5 Service Content for SAP S/4HANA delivery with BW4CONT 200 SP04 (Orders), SP05 (Confirmations) and SP06 (Contracts)

6 Basis ADSO for SAP S/4HANA Finance Universal Journal delivered with BW4CONT SP06

BW4CONT/B 2.0 >= SP0 requires SAP BW/4HANA 2.0 SP01

For BW/4HANA Content 1.0 availability please check the appendix

© 2020 SAP SE or an SAP affiliate company. All rights reserved. I PUBLIC

SAP S/4HANA CDS-View based extraction

SAP S/4HANA

SAP S/4HANA Cloud

- CDS-View based extraction from SAP S/4HANA and SAP S/4HANA Cloud systems
- CDS-Views provided by SAP or custom CDS-Views (OP)
- Two delta mechanisms available: based on time-stamps/date or on data base triggers (CDC)
- DataSources on basis of the CDS-Views with broad structures enable enhanced modeling in SAP BW/4HANA
- CDS Extraction blog available: Overview in Part I, Delta Handling in Part II and Miscellaneous Topics in Part III

© 2020 SAP SE or an SAP affiliate company. All rights reserved. I PUBLIC

SAP S/4HANA and SAP S/4HANA Cloud Content based on CDS-Views

SAP S/4HANA

SAP S/4HANA Cloud

SAP S/4HANA SD Sales, Billing and Conditions

- Enhanced delta mechanism (CDC-Delta)
- No filling of initial setup tables needed -> no system block required
- New Data Models available

SAP S/4HANA Plant Maintenance

- Timestamp based delta mechanism
- Extracting into the existing Data Models

SAP S/4HANA Service

- Enhanced delta mechanism (CDC-Delta)
- New Data Models available

SAP S/4HANA Finance Universal Journal

- Enhanced delta mechanism (CDC-Delta)
- New Data Model available (Basis ADSO)

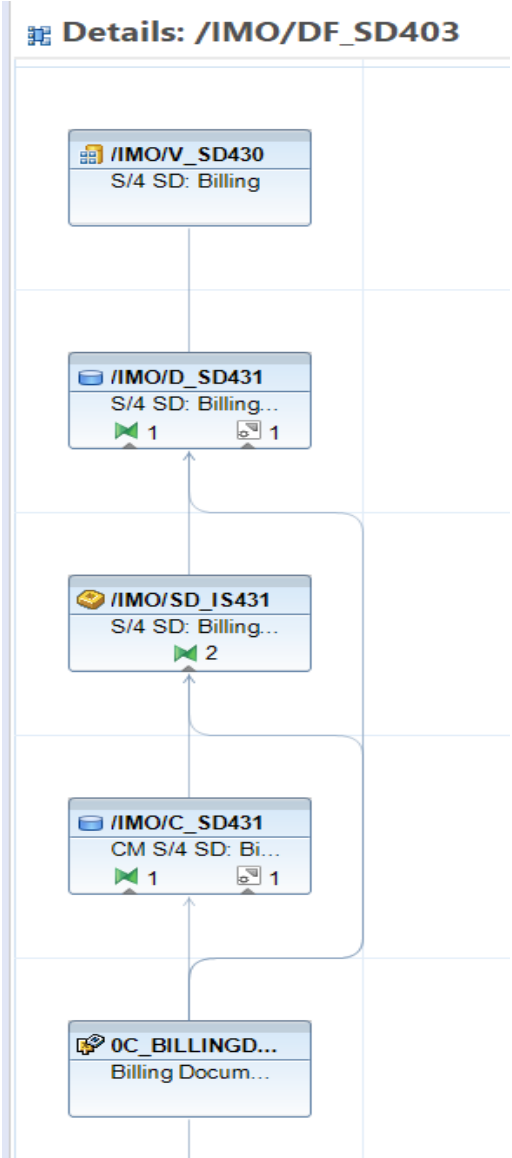

© 2020 SAP SE or an SAP affiliate company. All rights reserved. I PUBLIC

Business Content SAP S/4HANA Finance

Finance

SAP S/4HANA

SAP S/4HANA Cloud

SAP S/4HANA Finance:

- Foundation DSO as base for custom built analysis scenarios
- Updated master data and text provisioning
- Based on CDS-View extraction
- Enhanced delta mechanism (CDC-Delta)

- LSA++ Architecture incl. Staging/Corporate Memory
- Usage of DSO (advanced)
- Higher level of detail (down to line item level)

** Delivered with BW4CONT 1.0 SP16 , BW4CONT 2.0 SP06

© 2020 SAP SE or an SAP affiliate company. All rights reserved. I PUBLIC

Dataflow SAP S/4HANA Finance

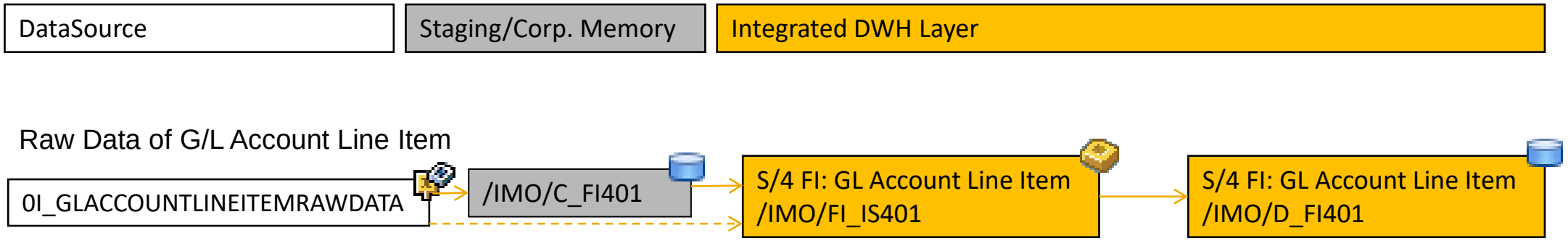

Delivered with BW4CONT 1.0 SP16, BW4CONT 2.0 SP06

© 2020 SAP SE or an SAP affiliate company. All rights reserved. I PUBLIC

Business Content Service (SAP S/4HANA and SAP S/4HANA Cloud)

Service

SAP S/4HANA

SAP S/4HANA Cloud

- Service Contract:
  - Service Contract data on header and item level
  - Contract numbers and net amounts
  - Top selling products
- Service Order:
  - Service Order data on header and item level
  - Incoming, open orders, sales amounts, …
  - Completion rate, average net amounts
- Service Confirmation:
  - Service Confirmation data on header and item level
  - Service Confirmation net amounts, numbers, service overview, …

- For SAP S/4HANA and SAP S/4HANA Cloud
- Based on CDS-View extraction
- Enhanced delta mechanism (CDC-Delta)

Recommended SP : BW4CONT1.0 SP16 or
BW4CONT 2.0 SP06

For more information:
see this blog: [CDS-Based BW Extractors for Service in SAP S/4HANA and SAP S/4HANA Cloud]

- LSA++ Architecture incl. Staging/Corporate Memory
- Usage of DSO (advanced), CompositeProvider
- Virtual Data Mart Layer
- Higher level of detail

© 2020 SAP SE or an SAP affiliate company. All rights reserved. I PUBLIC

Dataflow Service for SAP S/4HANA and SAP S/4 HANA Cloud

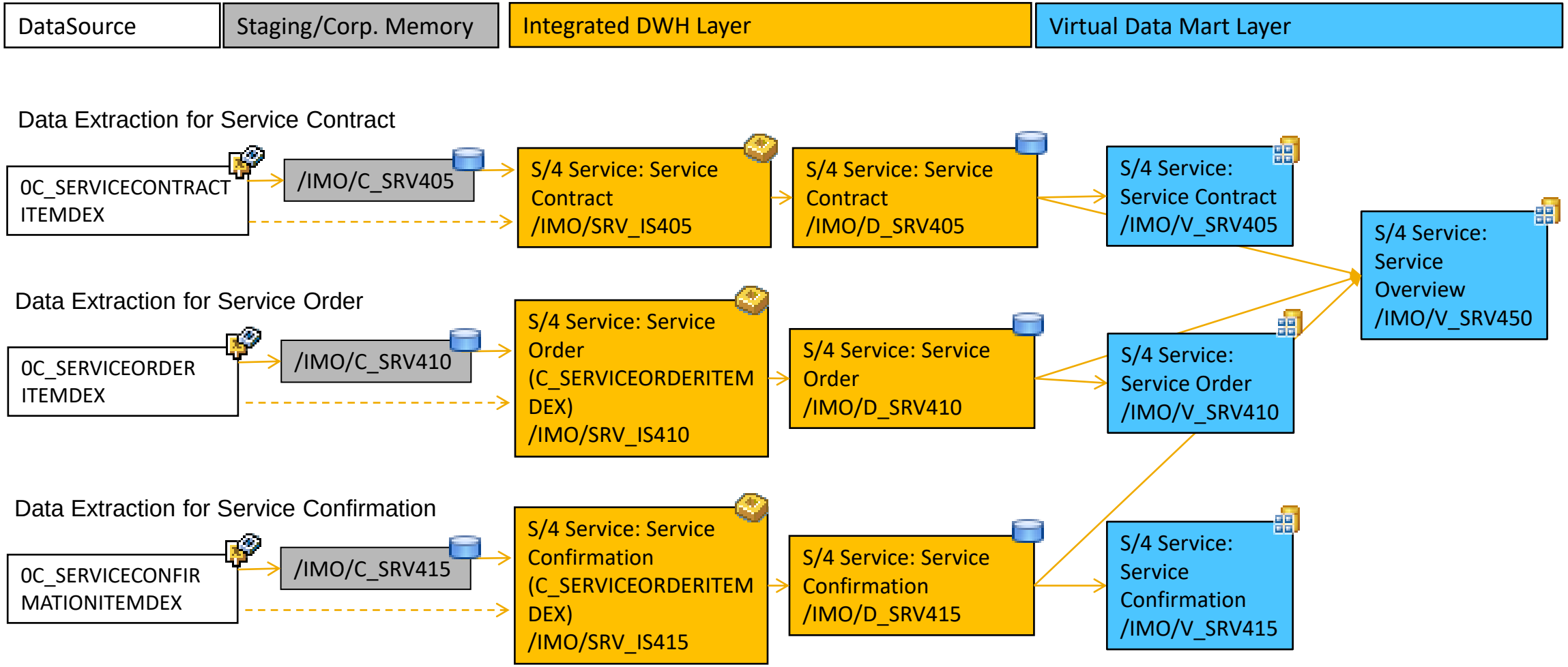

Service Order – delivered with BW4CONT 1.0 SP15 and BW4CONT 2.0 SP04
Service Confirmation – delivered with BW4CONT 1.0 SP15 and planned for BW4CONT 2.0 SP05
Service Contract – delivered with BW4CONT1.0 SP16 and BW4CONT 2.0 SP06

© 2020 SAP SE or an SAP affiliate company. All rights reserved. I PUBLIC

Business Content SD (SAP S/4HANA and SAP S/4HANA Cloud)

Sales & Distribution

SAP S/4HANA

SAP S/4HANA Cloud

based on CDS-View extraction

- Streamlined Data Model for SD Sales, Billing and Conditions
- Comprehensive DataSource allows for more detailed analyses
- Enhanced delta mechanism (CDC-Delta)
- No filling of initial setup tables needed -> no system block required
- Provided keyfigures:
  Incoming sales order amount, - cost, sales volume, sales profit margin, sales cost, customer credit memo amount, canceled sales volume, quantities, sales profit margin ratio, condition amount

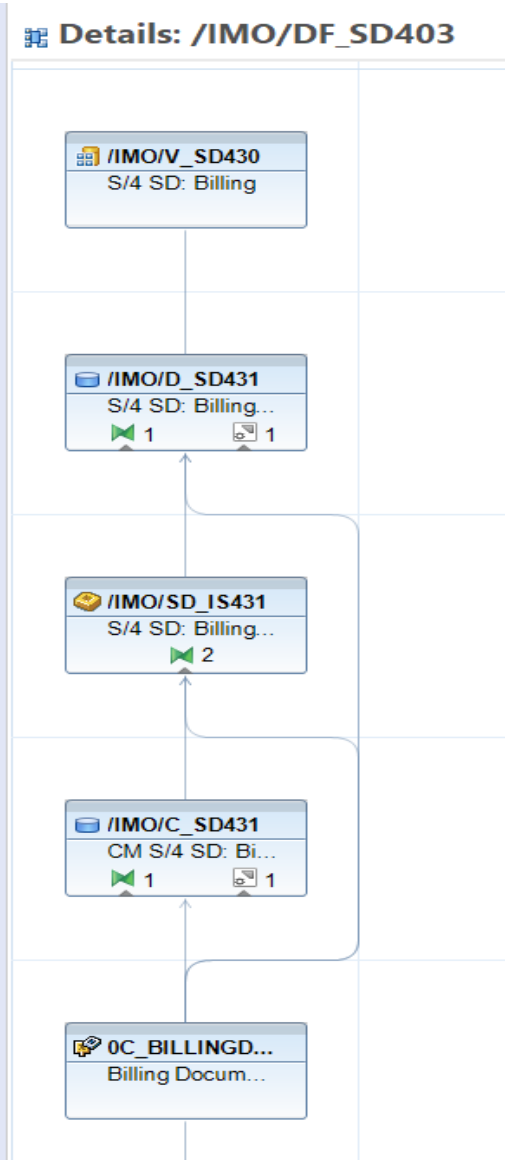

For additional information about SAP BW/4HANA Content for SD-Sales and SD- Billing (SAP S/4HANA extraction) see SAP Note 2832702 and 2796370

© 2020 SAP SE or an SAP affiliate company. All rights reserved. I PUBLIC

Dataflow SD – Sales and Billing for SAP S/4HANA and SAP S/4HANA Cloud

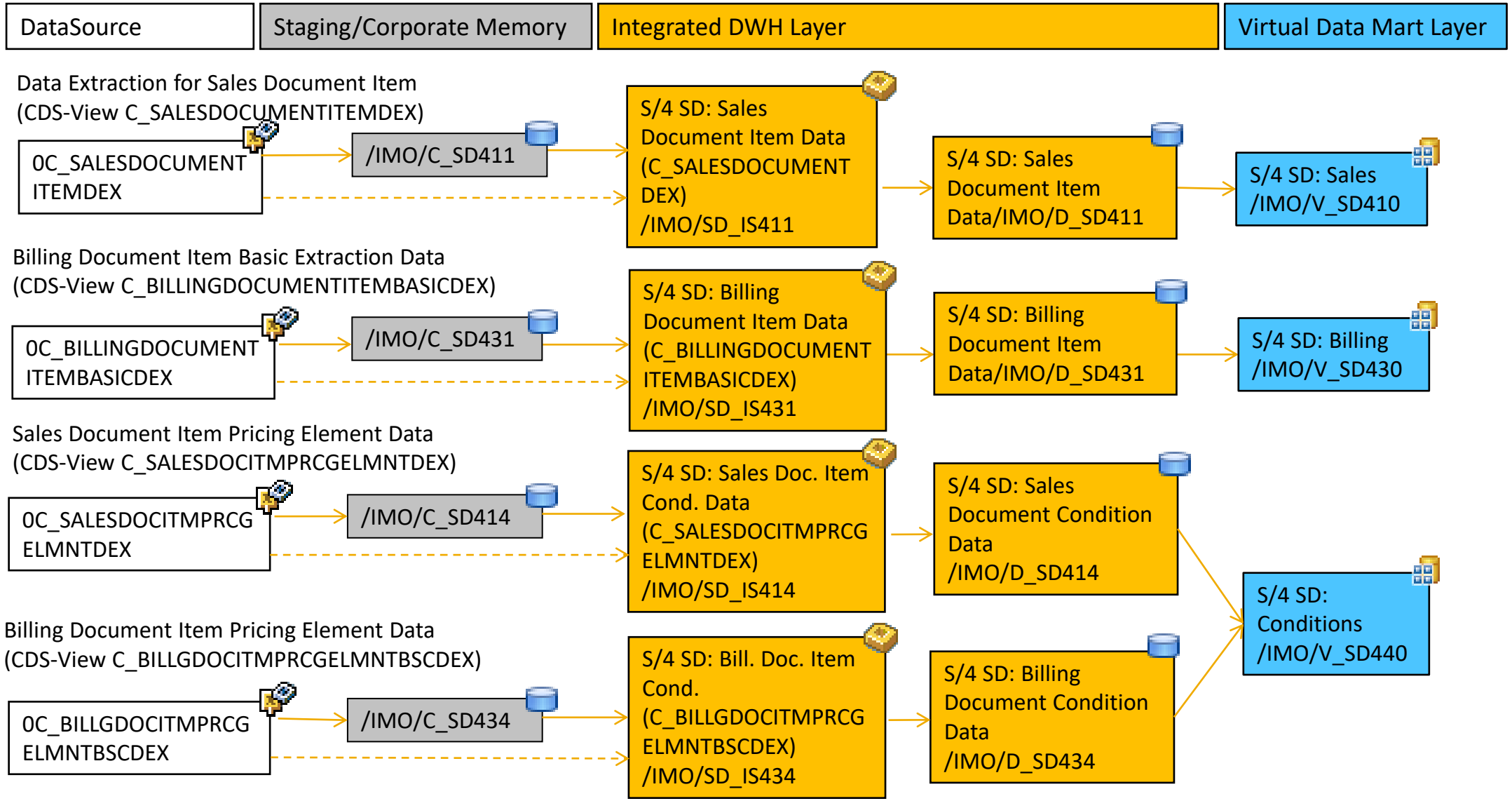

Billing - delivered with BW4CONT 1.0 SP11 and BW4CONT 2.0 SP01
Sales - delivered with BW4CONT 1.0 SP12 and BW4CONT 2.0 SP02
Conditions – delivered with BW4CONT 1.0 SP13 and BW4CONT 2.0 SP03

© 2020 SAP SE or an SAP affiliate company. All rights reserved. I PUBLIC

Business Content Inventory Management (MM-IM)

Material Management: Inventory Management

- Material Stock and Movements:
  - Stock values and quantities for different types of stocks, (total stock, valuated stock, special stocks and consignment stock)
  - Stock overview
  - Material range of coverage
  - Stock obsolescence and variance

SAP Note for SAP ERP / S/4HANA Inventory Management in SAP BW/4HANA: 2678507

- LSA++ Architecture incl. Staging/Corporate Memory
- Usage of DSO (advanced), CompositeProvider
- Virtual Data Mart Layer
- Higher level of detail for Movements

© 2020 SAP SE or an SAP affiliate company. All rights reserved. I PUBLIC

Dataflow Inventory Management (MM-IM)

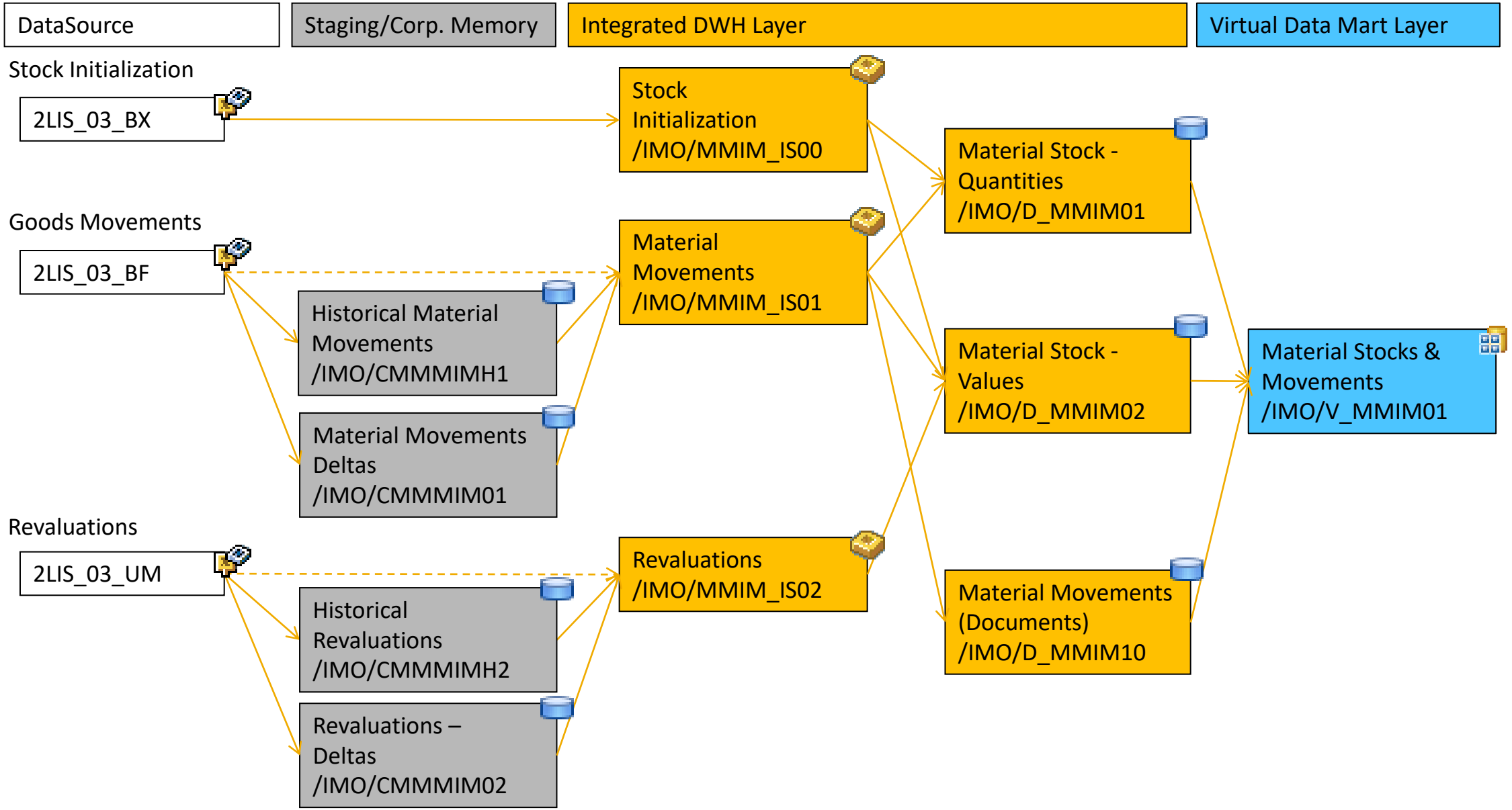

© 2020 SAP SE or an SAP affiliate company. All rights reserved. I PUBLIC

Showing Simplification Transformation Logic in Inventory Management

Classic BW Content for Inventory Management (InfoCube 0IC_C03)

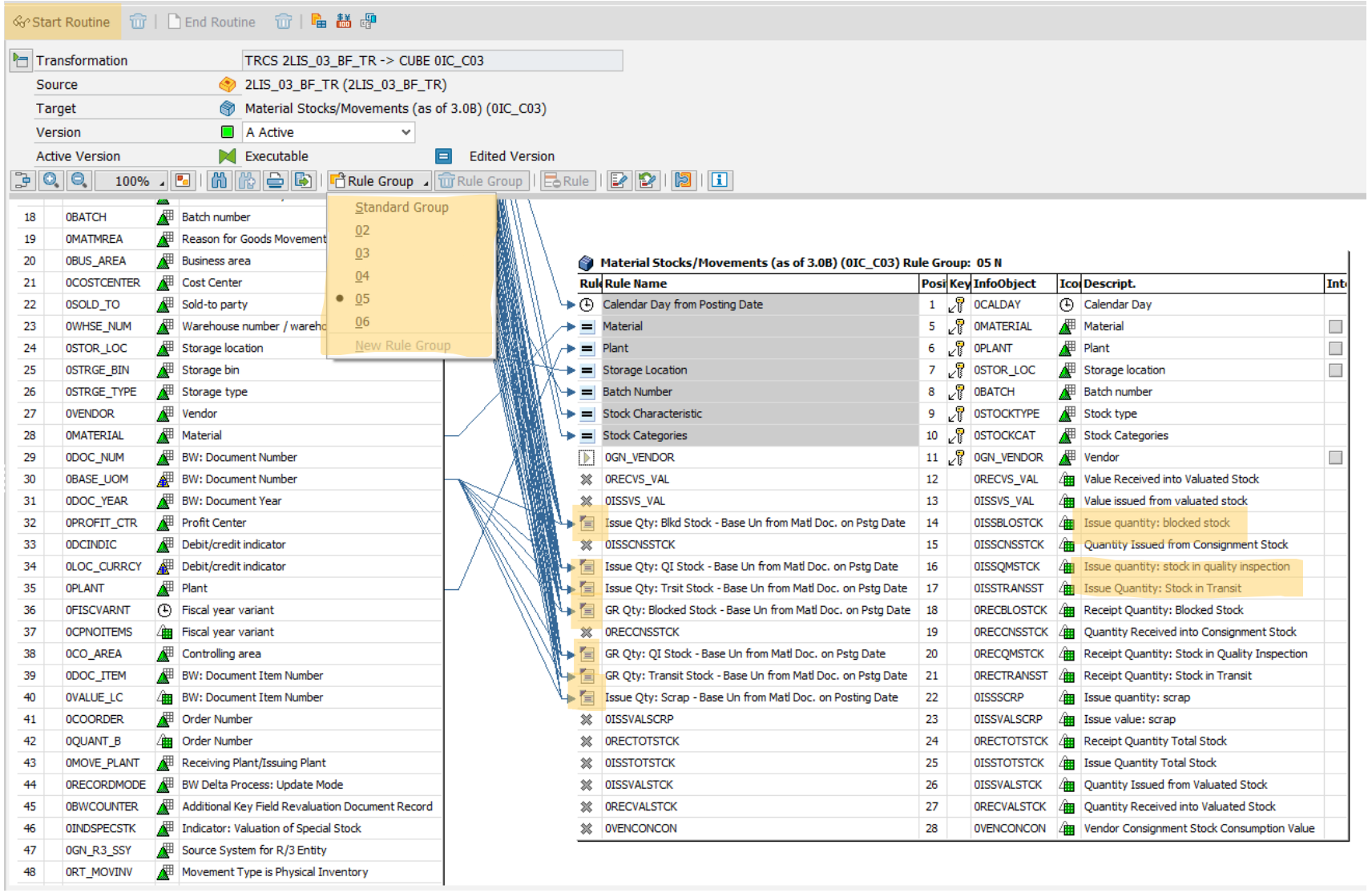

- Start Routine (ABAP)
- Up to six rule groups
- Field ABAP Routines
- Key Figures for special stocks

© 2020 SAP SE or an SAP affiliate company. All rights reserved. I PUBLIC

Showing Simplification Transformation Logic in Inventory Management

SAP BW/4HANA Content for Inventory Management

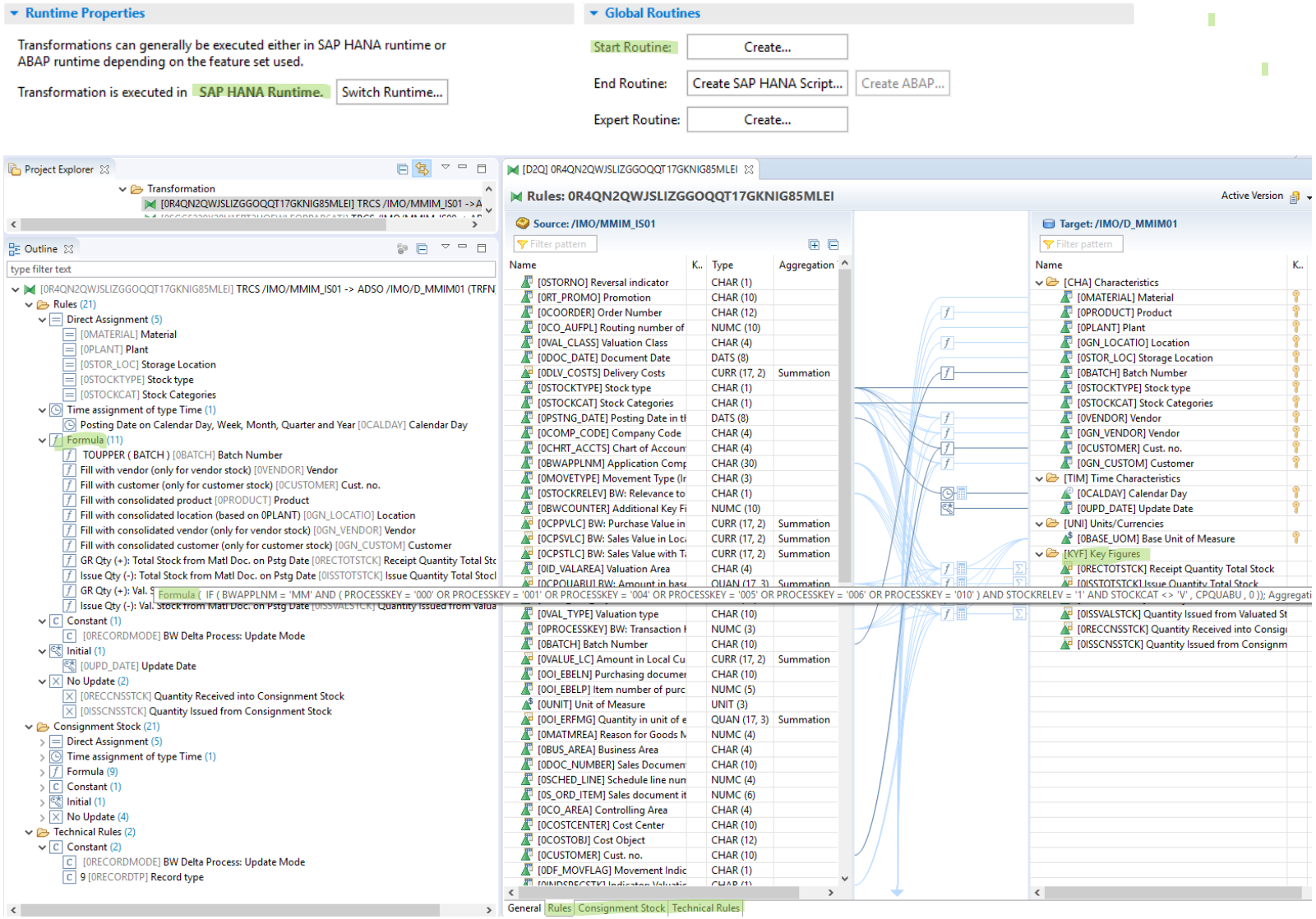

- No Start Routine
- Only formulas used, no ABAP routines
- Less rule groups
- Less persisted key figures (Special stock key figures virtualized)

☛ Transformations can be executed in SAP HANA

© 2020 SAP SE or an SAP affiliate company. All rights reserved. I PUBLIC

MM-Inventory Management Benefits of new Data Model

Change	Benefit
Split „Stock Quantity“ vs „Stock Values“ vs „Movements“ in separate part provider	- More robust solution (SAP Note 586163) - Less Rule Groups in BW Transformations - Reduces complexity of transformation logic - Simplified custom implementation if only stock quantities are required - More flexibility in Virtual Data Mart Layer e.g. when defining pure consumption key figures based on „Movements“ - Better performance due to partitioning and pruning
Virtualization of business logic: Shift from key figure model to account based model for special stocks	- Less transformation rules (virtualized as BEx Query restricted / calculated key figures) - More flexibility when adjusting /creating restricted / calculated key figures in Virtual Data Mart Layer
Replacing start routine by transformation formula for key figure (to exclude consumptions)	- Transformation logic for key figure calculation at one place - Allows DTP execution in HANA
Adding characteristic Customer for consignment stock analysis	- Improved end user experience: reporting on customer stock by customer

© 2020 SAP SE or an SAP affiliate company. All rights reserved. I PUBLIC

Business Content SuccessFactors – Workforce Management

Workforce Management

Master Data

- Employment History (User ID)
- Person
- Job
- Position

Delivered with BW4CONT 200 SP00

Headcount and Employment Events

- Headcount Reporting
- Employment Event Reporting

Delivered with BW4CONT 200 SP01

- LSA++ Architecture incl. Staging/Corporate Memory
- For data integration, see SAP Note 2776343

© 2020 SAP SE or an SAP affiliate company. All rights reserved. I PUBLIC

Business Content SuccessFactors – Key Feature Employment History

Workforce Management

The raw information extracted from SuccessFactors API EmpJob is transformed in the Integrated DataWarehouse Layer to cleanse and compute the employment history for each employee.
The result is then loaded into the InfoObject /SFA/EMPL *Employment (User ID).*
This is a necessary step to provide the foundation for meaningful headcount or event reporting.

Based on the data set provided by EmpJob the following is applied in a transformation (start routine):

- Update attributes based on last sequence number for a given EffectiveFromDate
- Update Event and Event Reason attributes by applying movement logic
- Update Internal Event Flag to distinguish between external and internal events (External Hire vs Internal Hire)

Raw Data EmpJob (Data Sample)

Data Browser: Table /B1S/ASWFM01V22 Select Entries 10

USER	STARTDATE	SEQNUMBER	RECORDMODE	ENDDATE	EMPLSTATUS	EVENT	EVENTREASON	FTE	MANAGERID	GN_R3_SSY	UPD_DATE
1010...	20130624020000000000	1	N	20130624020000000000	4595	3669	HIRNEW	1,0000000000000000E+00	NO_MANAGER	SF	29.03.2019
1010...	20130624020000000000	2	N	20141231010000000000	4595	3669	HIRNEW	1,0000000000000000E+00	NO_MANAGER	SF	29.03.2019
1010...	20150101010000000000	1	N	20150101010000000000	4595	3666	DATACHG	1,0000000000000000E+00	101047	SF	29.03.2019
1010...	20150101010000000000	2	N	20161007020000000000	4595	3666	DATACHG	1,0000000000000000E+00	101047	SF	29.03.2019
1010...	20161008020000000000	1	N	20161008020000000000	4598	3680	TERERLRT	1,0000000000000000E+00	101047	SF	29.03.2019
1010...	20161008020000000000	2	N	20161008020000000000	4595	3669	HIRNEW	1,0000000000000000E+00	101047	SF	29.03.2019
1010...	20161008020000000000	3	N	20161015020000000000	4595	3666	DATACHG	1,0000000000000000E+00	101047	SF	29.03.2019
1010...	20161016020000000000	1	N	20161031010000000000	4595	3681	PAYXFR	1,0000000000000000E+00	101047	SF	29.03.2019
1010...	20161101010000000000	1	N	20161231010000000000	4595	3681	PAYXFR	1,0000000000000000E+00	101047	SF	29.03.2019
1010...	20170101010000000000	1	N	99991231010000000000	4595	3672	PAYOTH	1,0000000000000000E+00	101047	SF	29.03.2019

Transformed Data /SFA/EMPL Employment (UserID)

Data Browser: Table /B1S/QEMPL Select Entries 3.341

/B1S/S_EMPL	OBJVERS	DATETO	DATEFROM	/B1S/S_EVENT	/B1S/S_EVENT_EX	/B1S/S_REASON	/B1S/S_INT_EVENT	/B1S/S_DEPARTMNT	/B1S/S_REGRTERM	/B1S/S_EMPL_FTE
SF 101064	A	31.12.2014	24.06.2013	3669	H	HIRNEW		SF 50120010		1,000
SF 101064	A	07.10.2016	01.01.2015	3666	5	DATACHG	X	SF 50120010		1,000
SF 101064	A	15.10.2016	08.10.2016	3666	H	HIRNEW	X	SF 50120010		1,000
SF 101064	A	31.10.2016	16.10.2016	3681	6	PAYXFR	X	SF 50120011		1,000
SF 101064	A	31.12.2016	01.11.2016	3681	6	PAYXFR	X	SF 50120010		1,000
SF 101064	A	31.12.9999	01.01.2017	3672	12	PAYOTH	X	SF 50120010		1,000

© 2020 SAP SE or an SAP affiliate company. All rights reserved. I PUBLIC

Business Content SuccessFactors – Key Feature Source-System-Dependent InfoObjects

Workforce Management

Loading data from different SuccessFactors instances into one single SAP BW/4HANA system is made possible by using source-system-dependent objects.

The key of the source-system-dependent InfoObjects is concatenated in the transformations of the Integrated DataWarehouse Layer and has the following structure:

- Source System ID (as stored in table RSSOURCESYSTEM in field SOURSYSID)
- A blank character
- Local InfoObject key

This composed key is unique across the different SuccessFactors instances and will prevent to overwrite data with concurrent local keys.
There might be still the business case that for example the same logical Business Area might exist in different SuccessFactors instances with different keys.
An additional attribute “Group ID” is provided, that can be used to consolidate different local keys by the same group IDs in reporting.

Source-system-dependent InfoObjects

InfoObject	Description
/SFA/EMPL	Employment (User ID)
/SFA/PERSON	Person
/SFA/POSITION	Position
/SFA/JOBCODE	Job Code
/SFA/BUSAREA	Business Area
/SFA/COMPANY	Company
/SFA/COSTCTR	Cost Center
/SFA/DEPARTMNT	Department
/SFA/LOCATION	Location

Concatenated Key	Source System	Local Key	Description	Group ID
S1 1000	SF Instance 1 (S1)	1000	Hotel Business	A
S1 9500	SF Instance 2 (S1)	9500	Restaurant Business	B
S2 1000	SF Instance 2 (S2)	3000	Hotel Business	A
S3 1000	SF Instance 3 (S3)	1000	Apartment Business	C

© 2020 SAP SE or an SAP affiliate company. All rights reserved. I PUBLIC

Dataflow SuccessFactors – Workforce Management Master Data

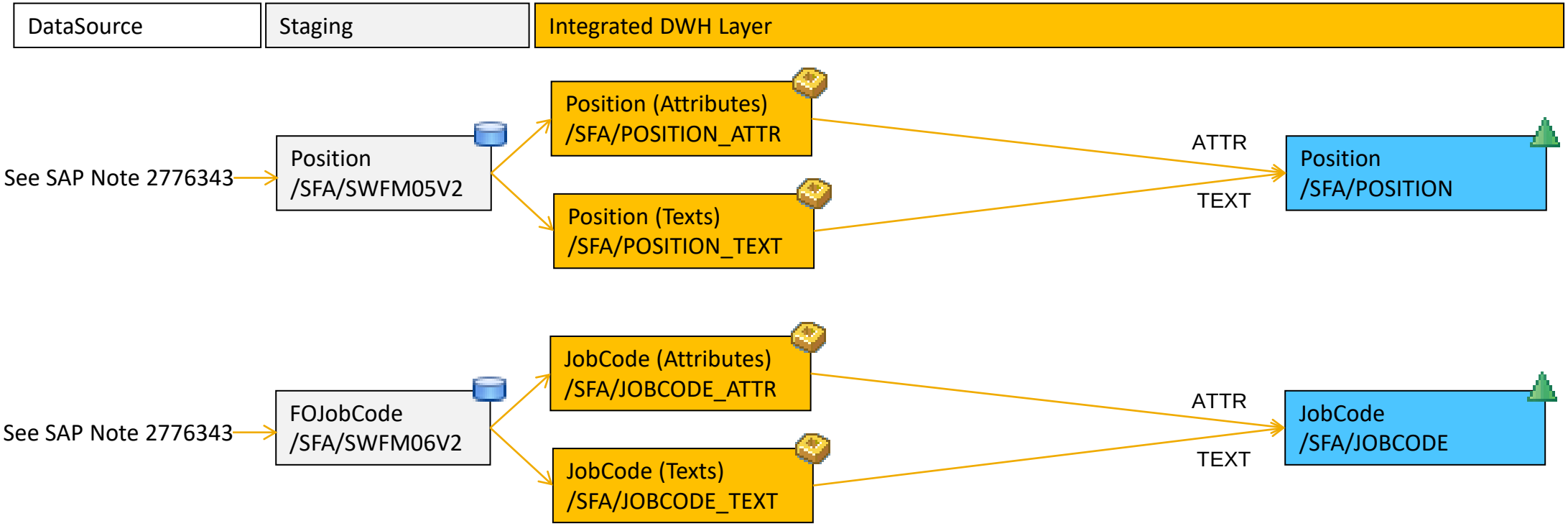

DataFlows for other InfoObjects can be found in the SAP Online Documentation [SuccessFactors – MasterData]

© 2020 SAP SE or an SAP affiliate company. All rights reserved. I PUBLIC

Dataflow SuccessFactors – Workforce Management Master Data

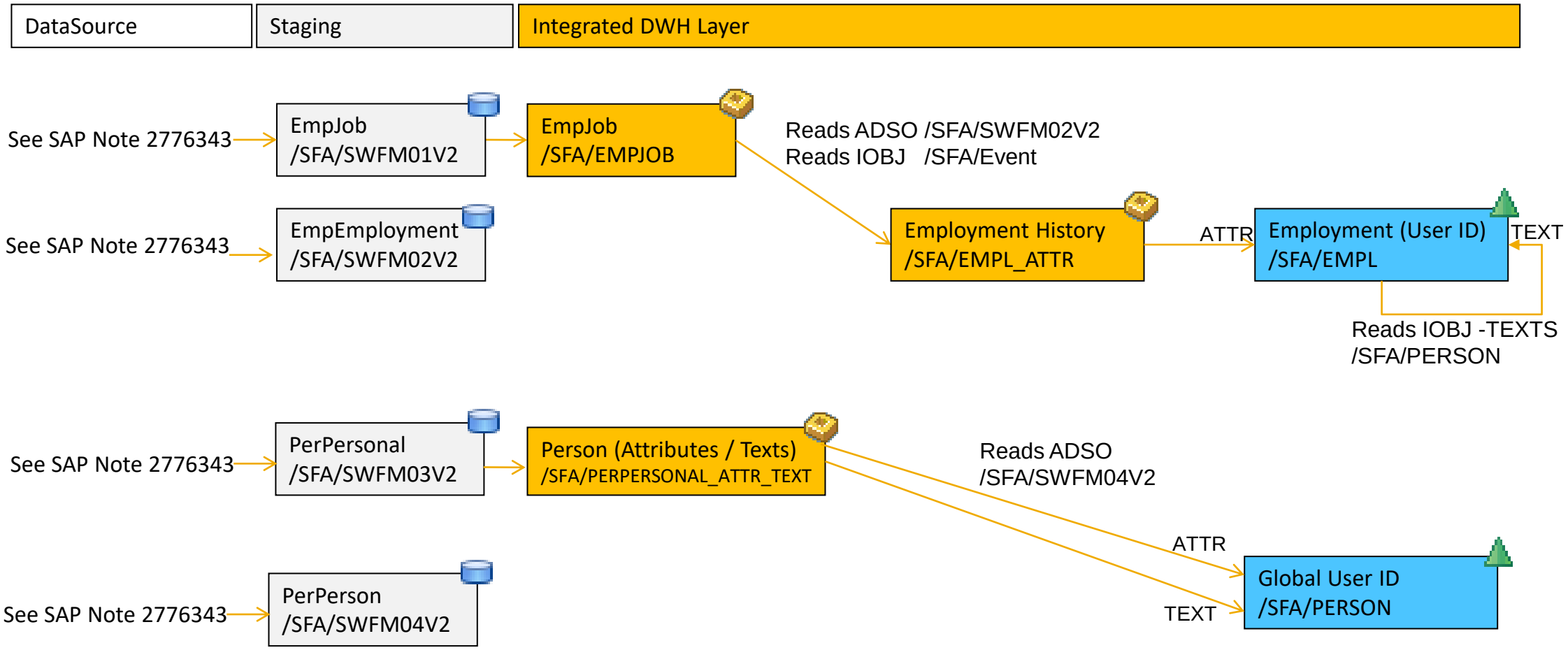

© 2020 SAP SE or an SAP affiliate company. All rights reserved. I PUBLIC

Dataflow SuccessFactors – Workforce Management Headcount and Event

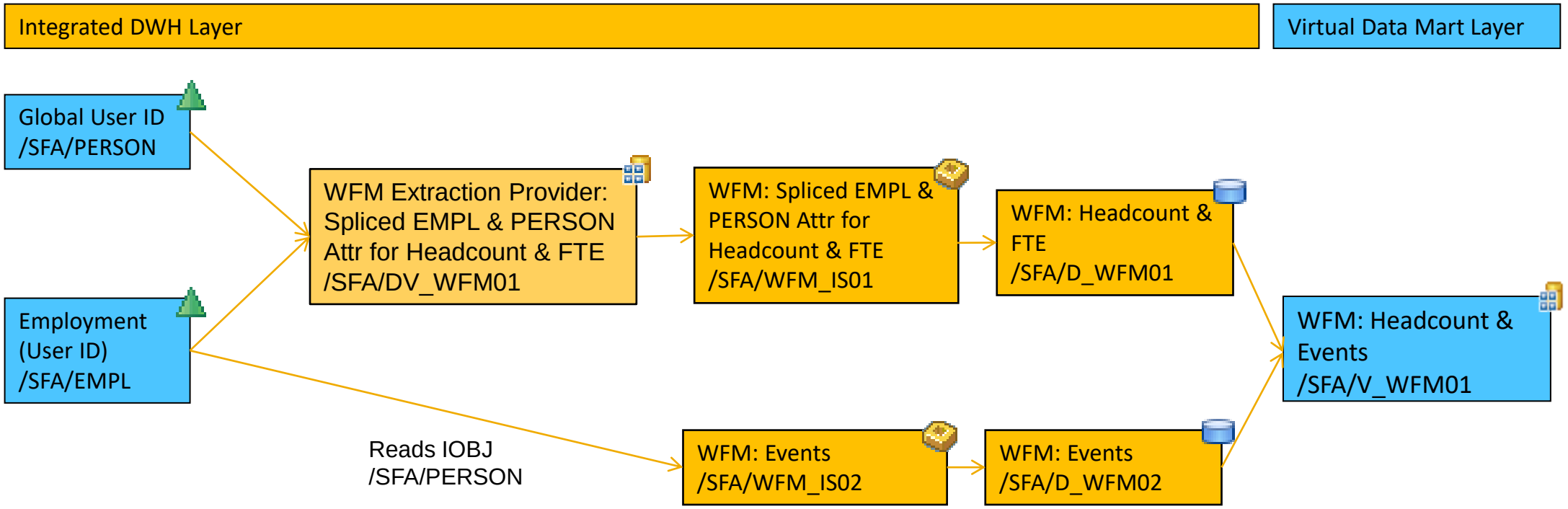

© 2020 SAP SE or an SAP affiliate company. All rights reserved. I PUBLIC

Business Content SuccessFactors – Performance Management

Performance Management

Performance Rating Analysis

- Current Rating
- Previous Rating
- Performance Improvement

Delivered with BW4CONT 200 SP01

- LSA++ Architecture incl. Staging/Corporate Memory
- For data integration, see SAP Note 2776343

© 2020 SAP SE or an SAP affiliate company. All rights reserved. I PUBLIC

Dataflow SuccessFactors – Performance Management

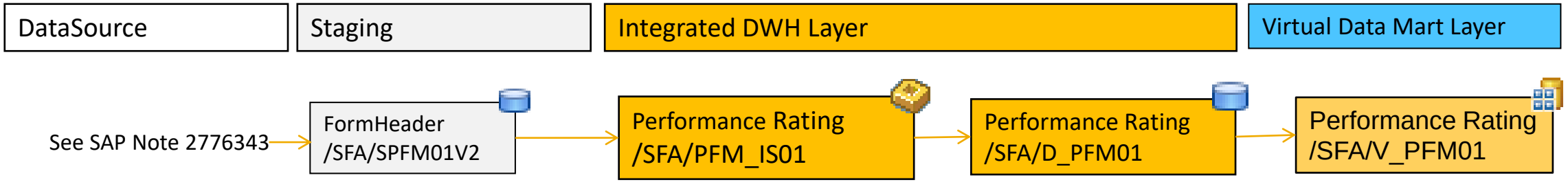

© 2020 SAP SE or an SAP affiliate company. All rights reserved. I PUBLIC

Business Content Master Data – Master Data Governance (MDG)

Master Data: Master Data Governance

- Data flow to load key mapping and best record information from SAP MDG into consolidated InfoObjects
  - Customer 0GN_CUSTOM based on customer and business partner
  - Vendor 0GN_VENDOR based on vendor and business partner
  - Product 0PRODUCT based on material
- Allows consolidated reporting across multiple source systems

---

- LSA++ Architecture
- Usage of DSO (advanced)

© 2020 SAP SE or an SAP affiliate company. All rights reserved. I PUBLIC

Unified Reporting Using consolidated InfoObjects

What the purchase manager wants to see…

Group ID Partner	Vendor	Effective Net Invoice Volume in Document Currency
Thompson Electronics	Thompsen Inc.	189.000,00 EUR
	Thom. Germany	29.700,00 EUR
	Thompson Supplies	28.100,00 EUR
	Result	246.800,00 EUR
International Servic	Int. Services	177.400,00 EUR
	Int. Services	119.200,00 EUR
	Result	296.600,00 EUR
Supply & More	Supplies & More	149.300,00 EUR
	Supply & More Int.	41.300,00 EUR
	Result	190.600,00 EUR
Overall Result		734.000,00 EUR

But lack of standardized master data creates inaccurate and incomplete reporting, leading to poor business decisions

. . . no transparency into the vendors I do business with

Possible difficulties:

- Typos — Marvestlé, Marvetlé
- Parent-subsidiary — Company Holding, Company Regional Group
- Unharmonized Master Data — System A: 2000 HuloAir SE
  System B: 1000 HuloAir SE
  System B: 2000 AirFantasia SE

© 2020 SAP SE or an SAP affiliate company. All rights reserved. I PUBLIC

Consolidated InfoObjects Example Generic Vendor (0GN_VENDOR)

DataSource:

VENDOR = 0000001000

SOURCESYSTEM = EBUCLNT300

InfoSource:

0VENDOR = 1000

0LOGSYS = EB

DSO:

0GN_VENDOR = EB 2VEN1000

with attribute GroupID

2 digit System ID

Source System	ID
EBUCLNT300	EB
EBUCLNT330	ES
QWACLNT100	QW
QWACLNT200	QA

Maintained in BW Table
(RSA1 -> Source System Assignment)

InfoObject-Type

InfoObject	Type
0VENDOR	2VEN
0CUSTOMER	2CUS
0BPARTNER	2BPA
0MATERIAL	3MAT

Logic in Transformation / Function

SAP MDG

Vendor	GroupID
1000 HuloAir SE	1
2000 HuloAir SE	1
3000 AirFanta SE	2

© 2020 SAP SE or an SAP affiliate company. All rights reserved. I PUBLIC

Dataflow Master Data – Master Data Governance (MDG)

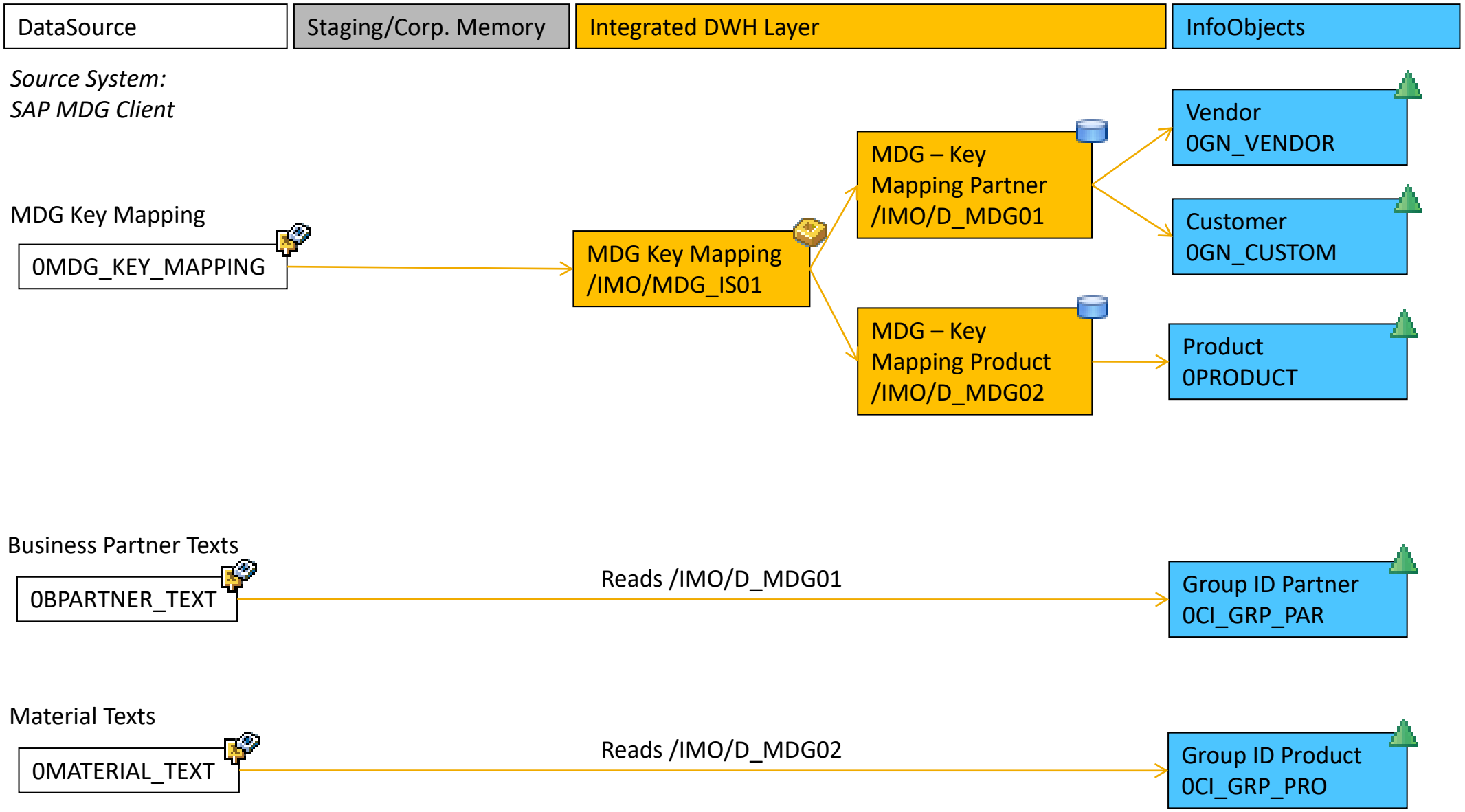

© 2020 SAP SE or an SAP affiliate company. All rights reserved. I PUBLIC

Business Content Real Estate Management

Real Estate

Transactional Data

- Conditions
- Cash Flow
  - Valuation Cash Flow *
  - Partner Cash Flow
  - Object Cash Flow
- Renewals
- Object Assignments

Master Data

- Contracts
- Master Data Valuation
  - Contract Object
  - Valuation Rules per Contract
  - Valuation Specific Condition Parameters

Delivered with BW4CONT 100 SP07

*Delivered with BW4CONT 100 SP09

- LSA++ Architecture incl. Staging/Corporate Memory
- Usage of DSO (advanced), CompositeProvider
- Virtual Data Mart Layer

© 2020 SAP SE or an SAP affiliate company. All rights reserved. I PUBLIC

Analytics with SAP Real Estate Management (Service No 50147664)

Service Content Overview

Scope Option 1 - SAP BW 7.x for SAP RE
Scope Option 2 - SAP BW/4HANA for SAP RE
Scope Option 3 - SAP Analytics Cloud for SAP RE

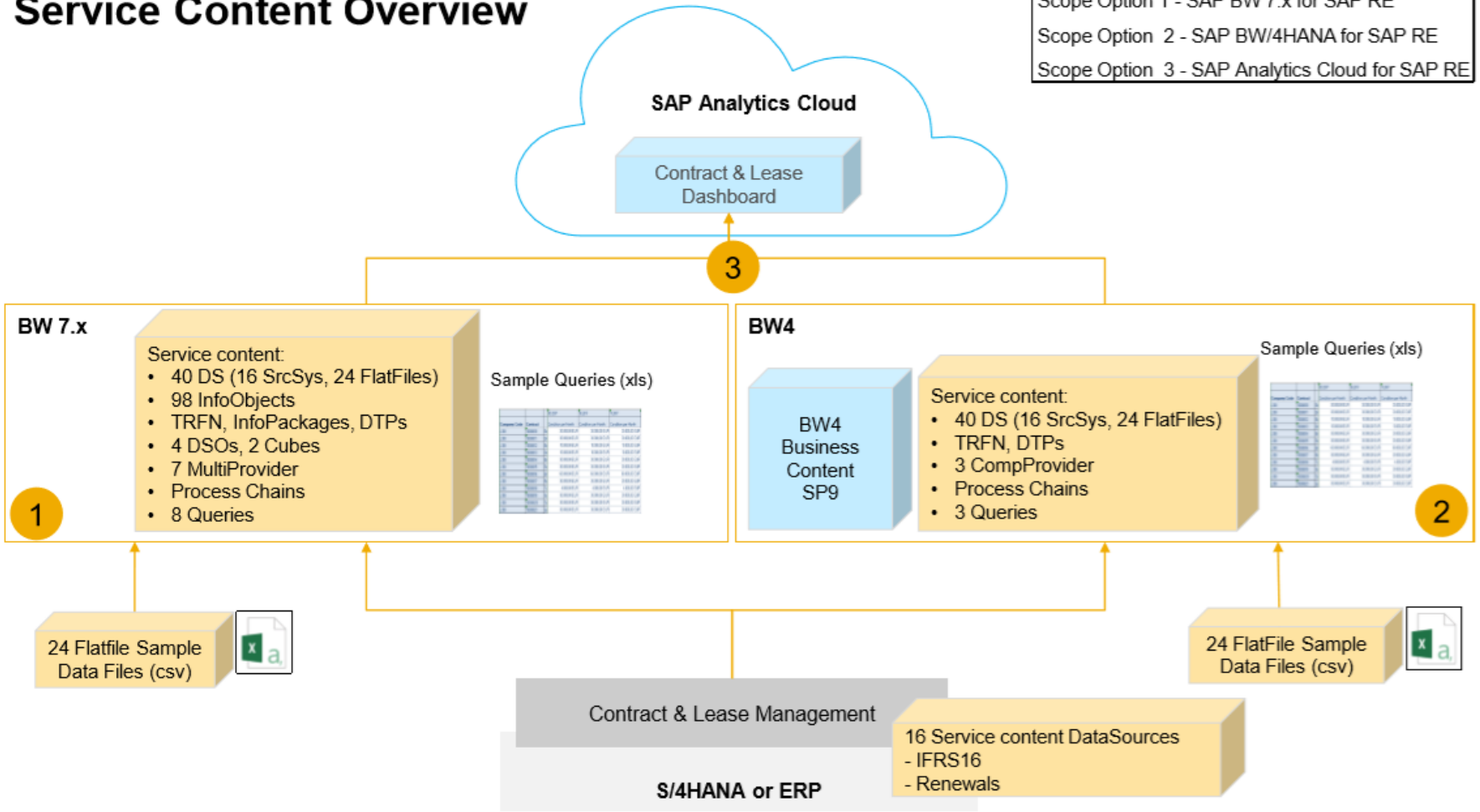

- **This service provides customers a confident start into deploying SAP analytics products on top of their SAP Real Estate Management system. The service comes with pre-defined business content options for SAP BW 7.x, SAP BW/4HANA and SAP Analytics Cloud that enable the creation of reports for lease contracts and property assets according to the new lease accounting rules IFRS 16 effective from January 1st 2019.**

© 2020 SAP SE or an SAP affiliate company. All rights reserved. I PUBLIC

Further Information Help, Notes

SAP Help Online Documentation BW/4 Content

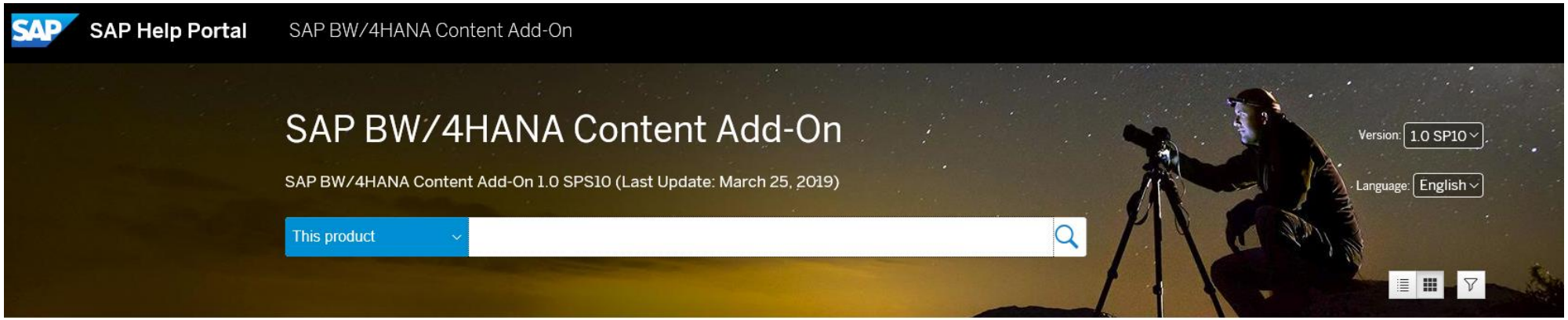

What's New

What's New in the SAP BW/4HANA Content Add-On 1.0

Information about what's new and what's changed since the last release

Installation and Upgrade

SAP Note 2393067 - Installation Note

Information on how to install SAP BW/4HANA Basis Content Add-On and SAP BW/4HANA Content Add-On

Additional Information

SAP Note 2397520 - Information on delivered Business Content

SAP Note 2395613 - Information on delivered InfoObjects

SAP Note 2395579 - Information on delivered variables

Feature Scope Description

Feature Scope Description - SAP BW/4HANA Basis Content Add-On (PDF)

Feature Scope Description - SAP BW/4HANA Content Add-On (PDF)

Application Help

SAP BW/4HANA Content Add-On

This documentation describes the data models and objects delivered with SAP BW/4HANA Content Add-On for specific business areas.

SAP BW/4HANA Product Documentation

SAP BW/4HANA Documentation

SAP BW/4HANA 1.0 SPS12 (Last Update: March 12, 2019)

Documentation: http://help.sap.com/bw4content

© 2020 SAP SE or an SAP affiliate company. All rights reserved. I PUBLIC

Further information Important Notes

Documentation: http://help.sap.com/bw4content

SAP Community Page for BW/4HANA Content: https://community.sap.com/topics/bw4-hana/content

SAP Note 2395579 – "SAP BW/4HANA Content - Additional information on delivered variables"

SAP Note 2395613 – "SAP BW/4HANA Content - Additional information on delivered InfoObjects"

SAP Note 2397520 – "SAP BW/4HANA Content - Differences to SAP HANA optimized BI Content delivered with BI CONT 7.57"

SAP Note 2232584 – "Release of SAP extractors for operational data provisioning (ODP)"

SAP Note 2400585 – "Collective Note: SAP BW/4HANA Content 1.0 (BW4CONT 100 & BW4CONTB 100)"

SAP Note 2785525 – "Collective Note: SAP BW/4HANA Content 2.0 (BW4CONT 200 & BW4CONTB 200)"

SAP Note 2785514 – "FAQ: SAP BW/4HANA Content (BW4CONT & BW4CONTB)"

SAP Note 2400685 – "SAP BW/4HANA Content 1.0 - Recommended SAP BW/4HANA 1.0 support package and SAP Notes"

SAP Note 2785708 – "SAP BW/4HANA Content 2.0 - Recommended SAP BW/4HANA 2.0 support package and SAP Notes"

SAP Note 2500202 – "S4TWL - BW Extractors in SAP S/4HANA"

SAP Note 2289424 – "S4TWL - SAP S/4HANA and SAP Business Warehouse Content - BI_CONT / BW4CONT"

SAP Note 2548065 – "SAP HANA-optimized BI Content and SAP S/4HANA"

For suggestions for next development areas please contact: Natascha.Marienfeld@sap.com

© 2020 SAP SE or an SAP affiliate company. All rights reserved. I PUBLIC

Business Content All Data Flows

Business Content Sales and Distribution (SD)

Sales & Distribution

SAP ERP

SAP S/4HANA

- Sales Overview:
  - Sales , delivery and billing document data on header and item level
  - Incoming , open orders, sales revenues, …
  - Credit memos
  - Expected incoming orders based on open quotations
- Conditions:
  - Order and billing conditions on item level
  - Condition value per customer
  - Variances of condition rates
- Delivery Service:
  - Sales document, sales document order delivery on header and item level, sales doc. header status
  - Delivery Performance
  - Perfect Order Fulfillment
- Based on ABAP DataSources available in SAP ERP and SAP S/4HANA

- LSA++ Architecture incl. Staging/Corporate Memory
- Usage of DSO (advanced), CompositeProvider
- Virtual Data Mart Layer
- Higher level of detail (down to line item/schedule line level)

Documentation

© 2020 SAP SE or an SAP affiliate company. All rights reserved. I PUBLIC

Dataflow Sales Overview

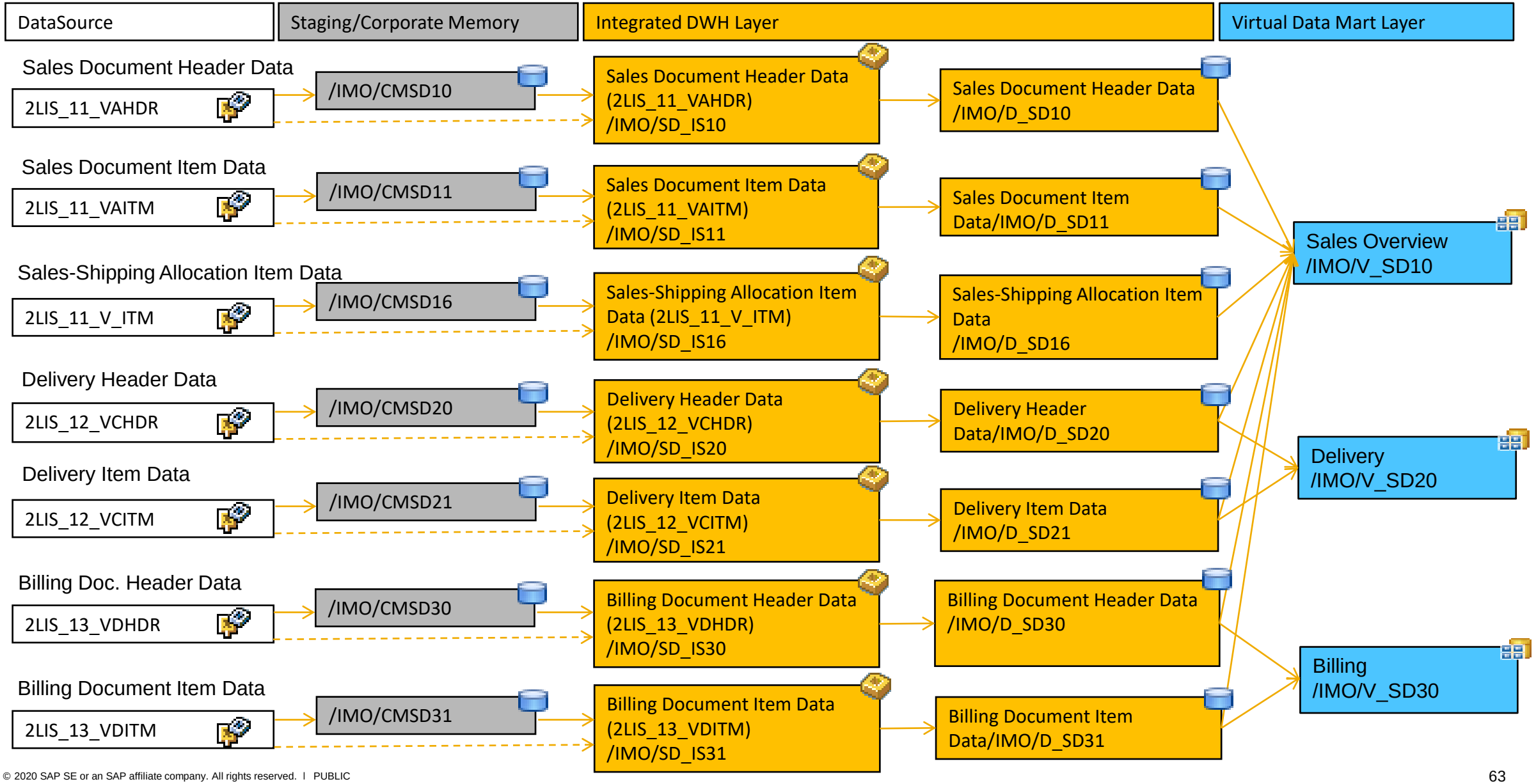

© 2020 SAP SE or an SAP affiliate company. All rights reserved. I PUBLIC

Dataflow Conditions

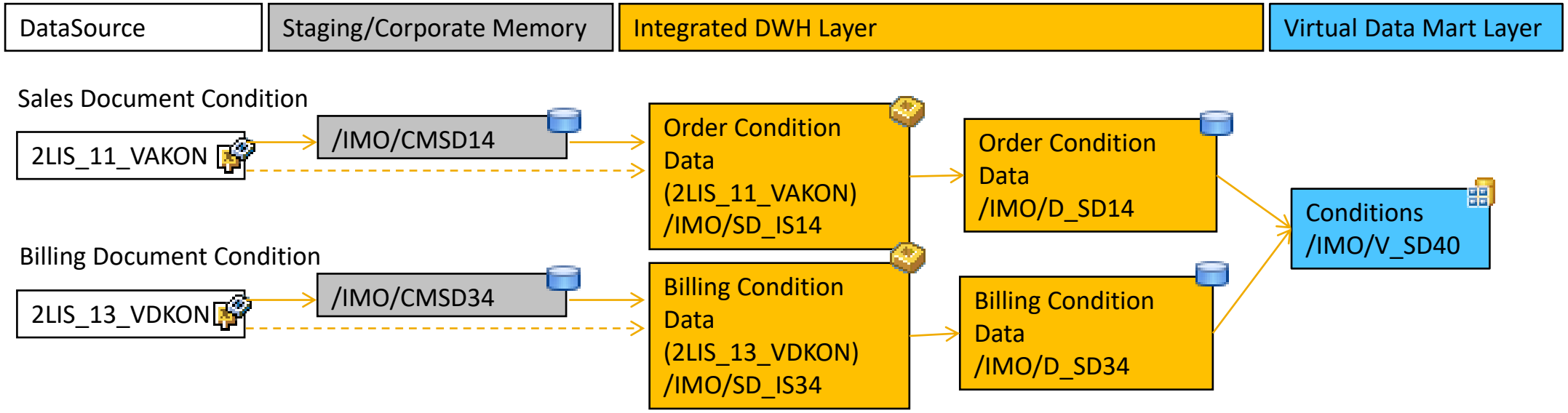

© 2020 SAP SE or an SAP affiliate company. All rights reserved. I PUBLIC

Dataflow Delivery Service

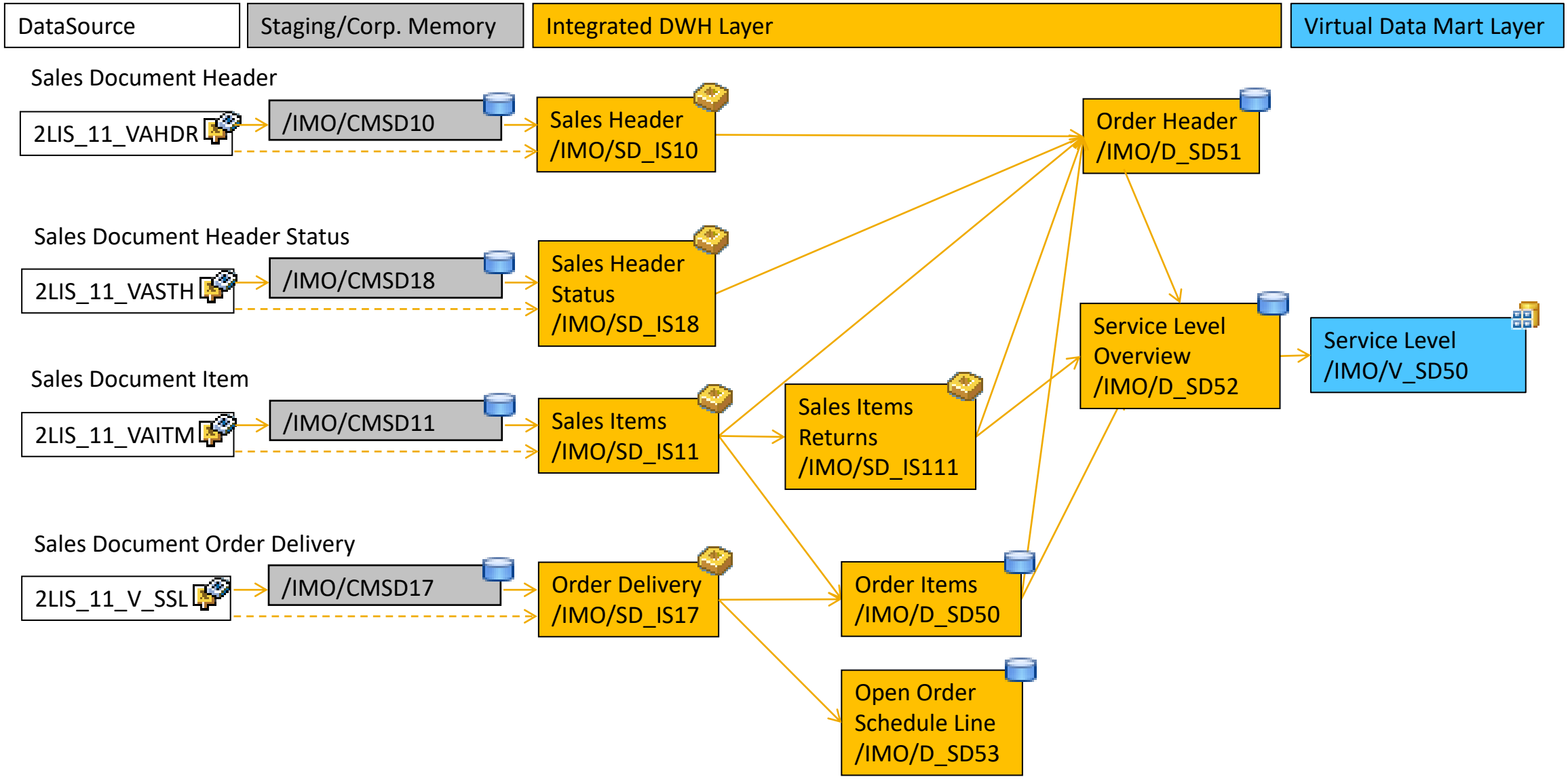

© 2020 SAP SE or an SAP affiliate company. All rights reserved. I PUBLIC

Business Content SD (SAP S/4HANA and SAP S/4HANA Cloud)

based on CDS-View extraction

Sales & Distribution

SAP S/4HANA

SAP S/4HANA Cloud

- Streamlined Data Model for SD Sales, Billing and Conditions
- Comprehensive DataSource allows for more detailed analyses
- Enhanced delta mechanism (CDC-Delta)
- No filling of initial setup tables needed -> no system block required
- Provided keyfigures:
  Incoming sales order amount, - cost, sales volume, sales profit margin, sales cost, customer credit memo amount, canceled sales volume, quantities, sales profit margin ratio, condition amount

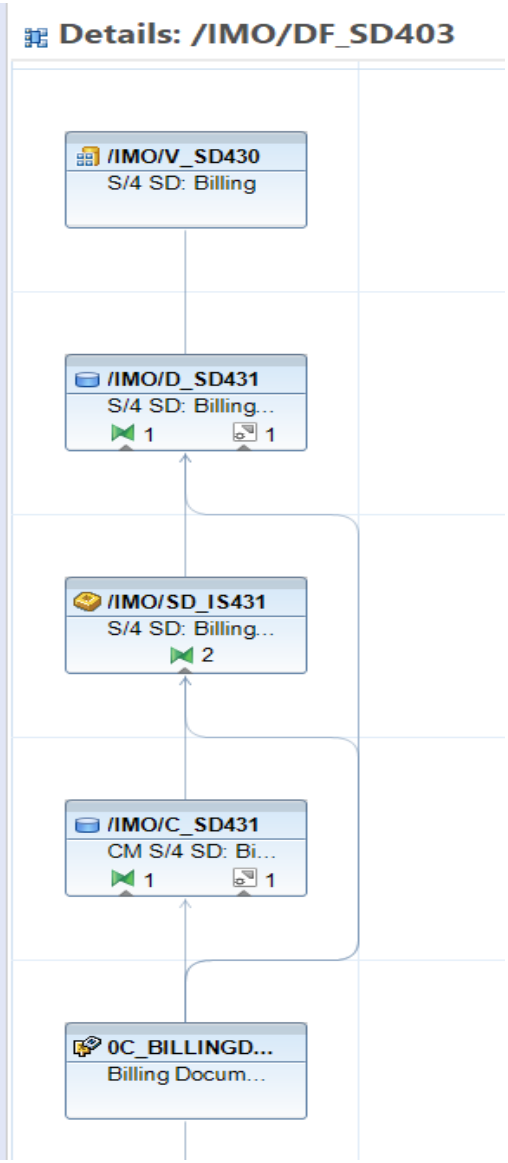

For additional information about SAP BW/4HANA Content for SD-Sales and SD- Billing (SAP S/4HANA extraction) see SAP Note 2832702 and 2796370

© 2020 SAP SE or an SAP affiliate company. All rights reserved. I PUBLIC

Dataflow SD – Sales and Billing for SAP S/4HANA and SAP S/4HANA Cloud

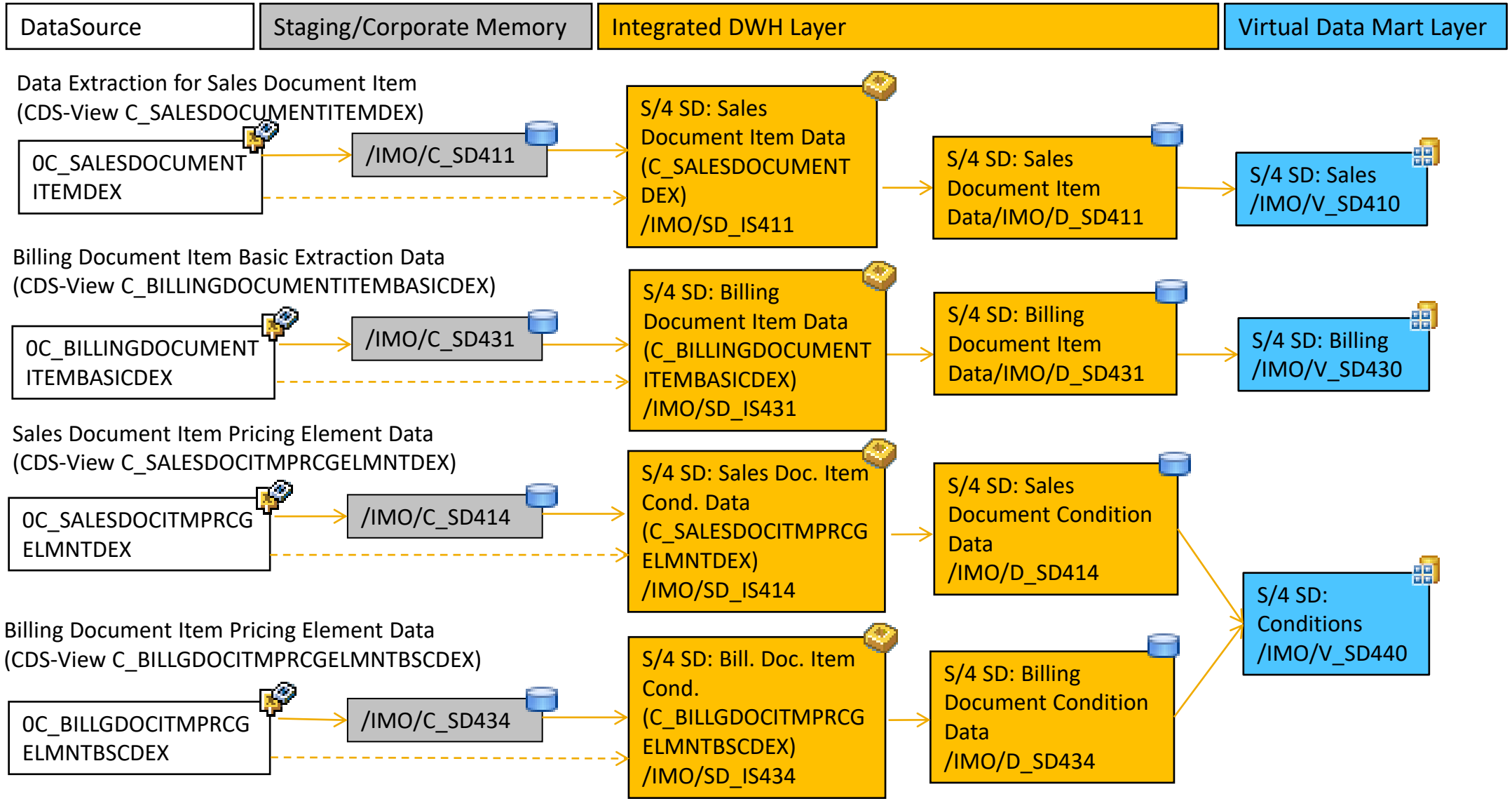

Billing - delivered with BW4CONT 1.0 SP11 and BW4CONT 2.0 SP01
Sales - delivered with BW4CONT 1.0 SP12 and BW4CONT 2.0 SP02
Conditions – delivered with BW4CONT 1.0 SP13 and BW4CONT 2.0 SP03

© 2020 SAP SE or an SAP affiliate company. All rights reserved. I PUBLIC

Business Content Service (SAP S/4HANA and SAP S/4HANA Cloud)

Service

SAP S/4HANA

SAP S/4HANA Cloud

- Service Contract:
  - Service Contract data on header and item level
  - Contract numbers and net amounts
  - Top selling products
- Service Order:
  - Service Order data on header and item level
  - Incoming, open orders, sales amounts, …
  - Completion rate, average net amounts
- Service Confirmation:
  - Service Confirmation data on header and item level
  - Service Confirmation net amounts, numbers, service overview, …

- For SAP S/4HANA and SAP S/4HANA Cloud
- Based on CDS-View extraction
- Enhanced delta mechanism (CDC-Delta)

Recommended SP : BW4CONT1.0 SP16 or
BW4CONT 2.0 SP06

For more information:
see this blog: [CDS-Based BW Extractors for Service in SAP S/4HANA and SAP S/4HANA Cloud]

- LSA++ Architecture incl. Staging/Corporate Memory
- Usage of DSO (advanced), CompositeProvider
- Virtual Data Mart Layer
- Higher level of detail

Documentation

© 2020 SAP SE or an SAP affiliate company. All rights reserved. I PUBLIC

Dataflow Service for SAP S/4HANA and SAP S/4 HANA Cloud

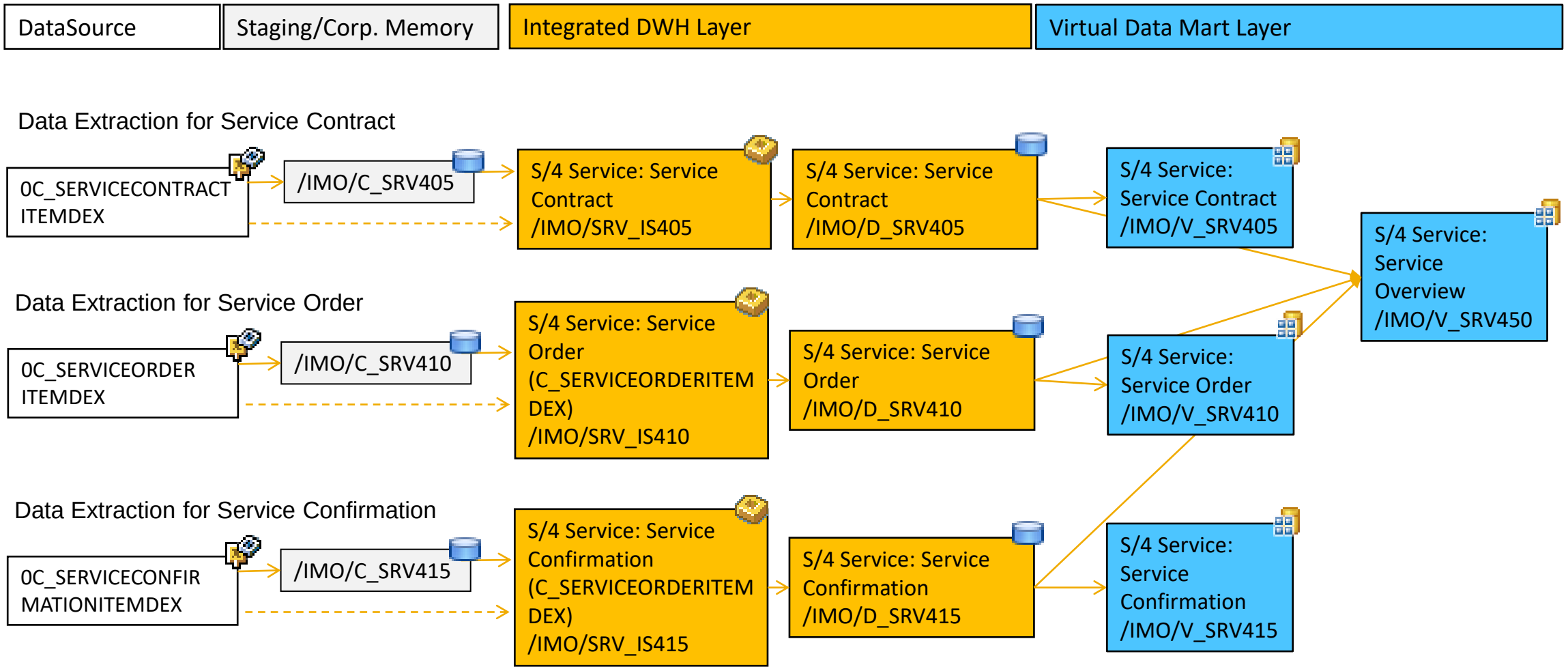

Service Order – delivered with BW4CONT 1.0 SP15 and BW4CONT 2.0 SP04
Service Confirmation – delivered with BW4CONT 1.0 SP15 and planned for BW4CONT 2.0 SP05
Service Contract – delivered with BW4CONT1.0 SP16 and BW4CONT 2.0 SP06

© 2020 SAP SE or an SAP affiliate company. All rights reserved. I PUBLIC

Business Content Plant Maintenance (PM)

Plant Maintenance
SAP ERP
SAP S/4HANA
SAP S/4HANA Cloud

- Measurement results for measuring counters / points
- Work center capacity and availability
- Scheduling Overview and Planned Order
- Equipment Dismantling
- Vehicle Fuel Consumption
- Status of maintenance order and technical objects

- Notifications including items, causes, activities, tasks *
- Maintenance orders and operations *

- SAP ERP Data Provisioning based on ABAP Extractors
- SAP S/4HANA and SAP S/4HANA Cloud Data Provisioning based on CDS-Views **
  Content data flows only partially available (see SAP Online Help, see also SAP Note 2299213)

Delivered with BW4CONT 1.0 SP02, * SP03, ** SP07

- LSA++ Architecture incl. Staging/Corporate Memory
- Usage of DSO (advanced), CompositeProvider
- Virtual Data Mart Layer
- Higher level of detail (down to line item level)

Documentation

© 2020 SAP SE or an SAP affiliate company. All rights reserved. I PUBLIC

Dataflow Plant Maintenance PM (SAP ERP and SAP S/4HANA based on ABAP Datasources)

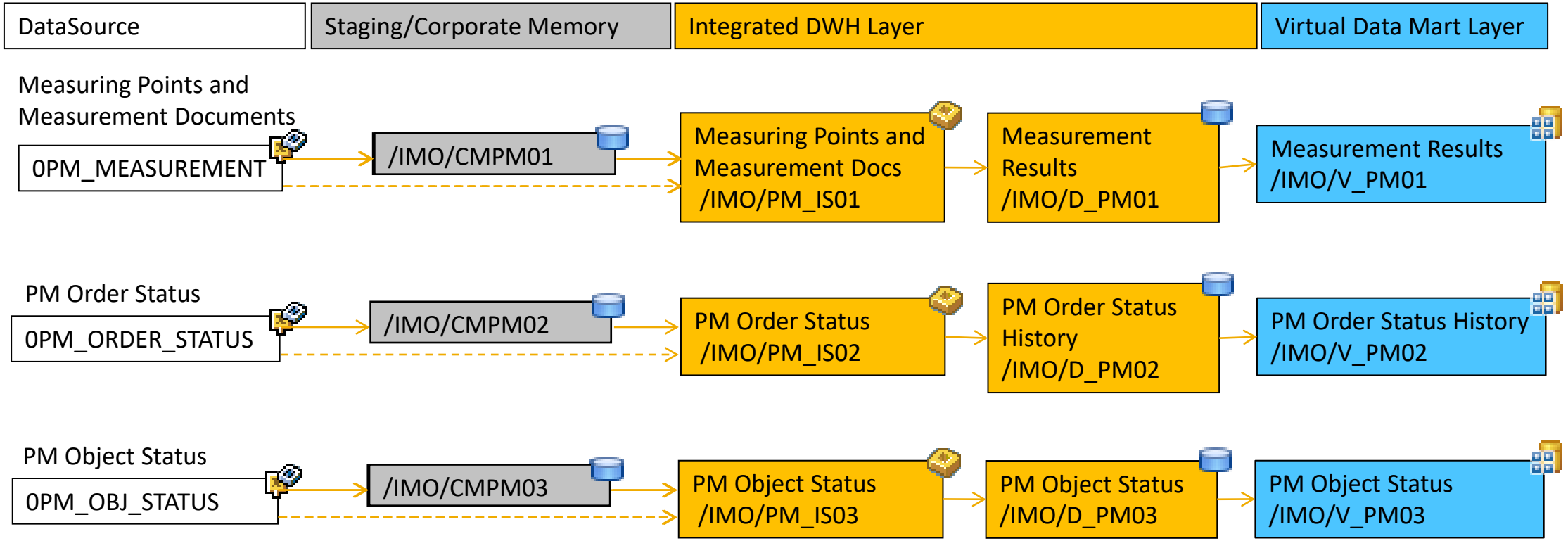

Delivered with BW4CONT 1.0 SP02
BW4CONT 2.0 SP0

© 2020 SAP SE or an SAP affiliate company. All rights reserved. I PUBLIC

Dataflow Plant Maintenance PM (SAP ERP and SAP S/4HANA based on ABAP Datasources)

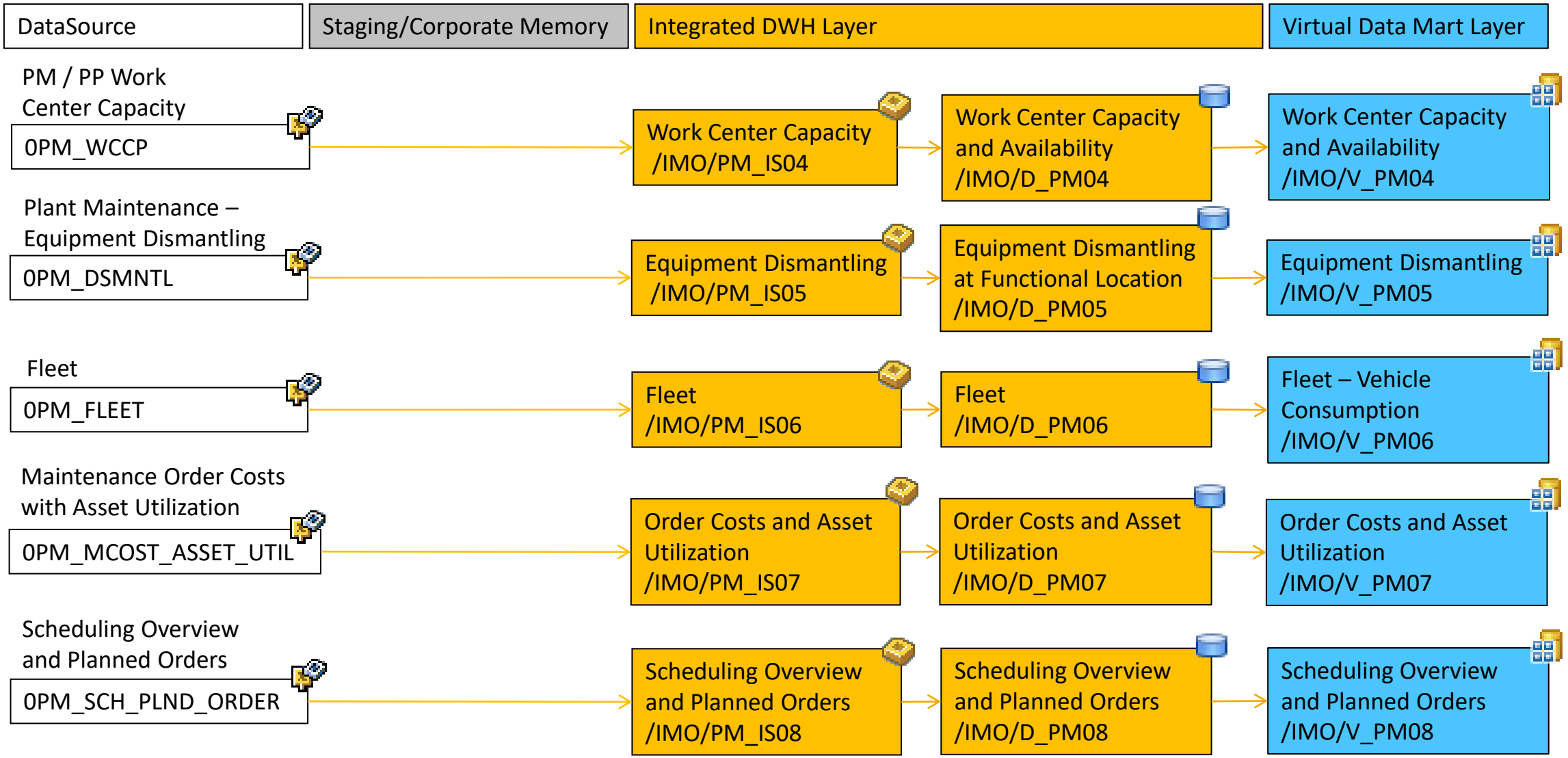

Delivered with BW4CONT 1.0 SP02
BW4CONT 2.0 SP0

© 2020 SAP SE or an SAP affiliate company. All rights reserved. I PUBLIC

Dataflow Plant Maintenance PM (SAP ERP and SAP S/4HANA based on ABAP Datasources)

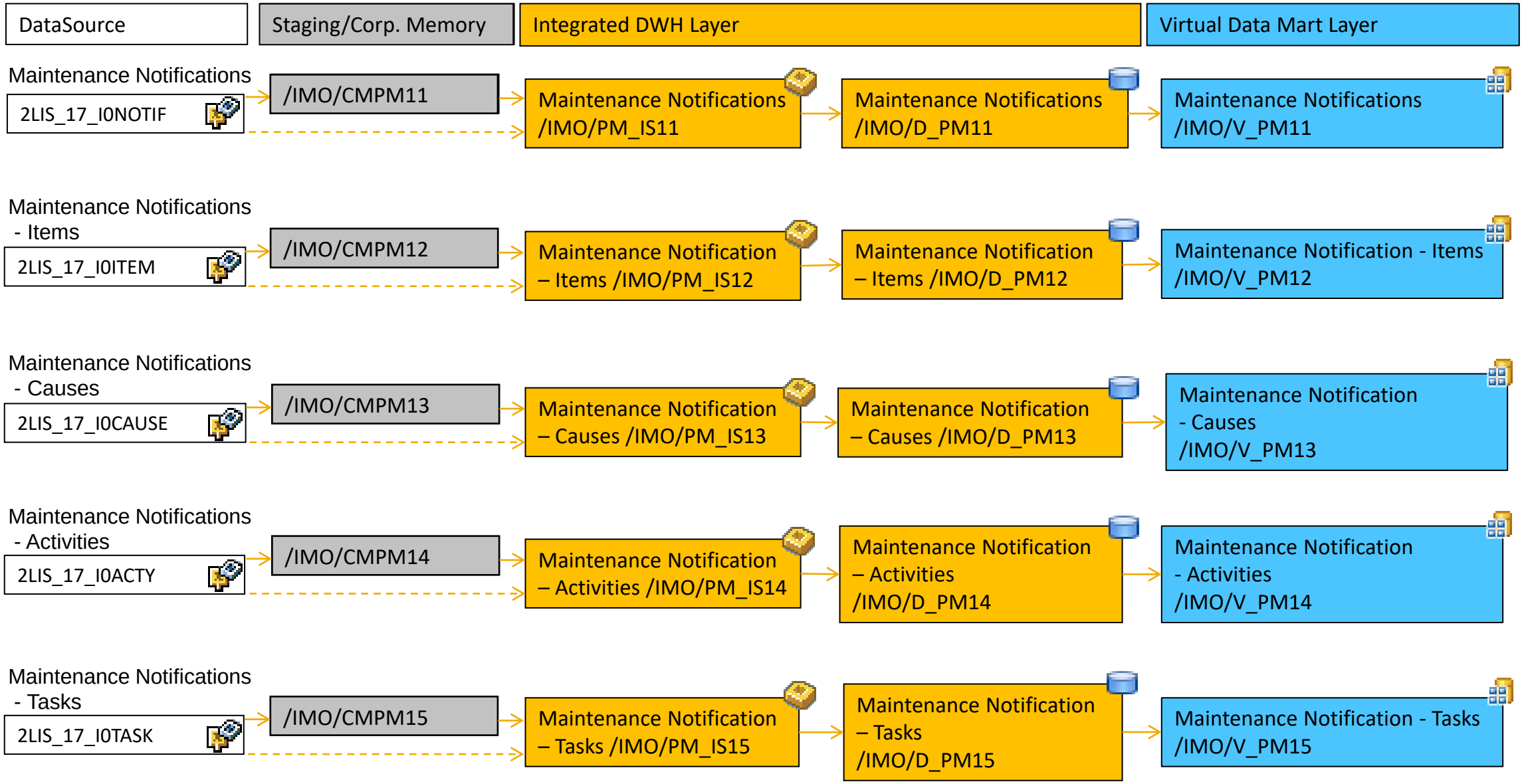

© 2020 SAP SE or an SAP affiliate company. All rights reserved. I PUBLIC

Delivered with BW4CONT 1.0 SP03, BW4CONT 2.0 SP0

Dataflow Plant Maintenance PM (SAP ERP and SAP S/4HANA based on ABAP Datasources)

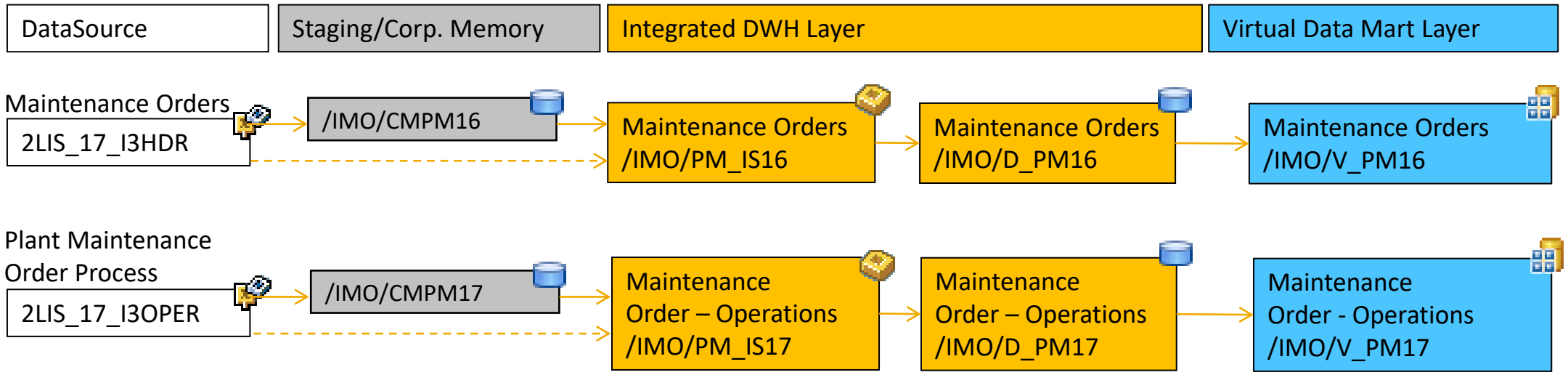

Delivered with BW4CONT 1.0 SP03, BW4CONT 2.0 SP0

© 2020 SAP SE or an SAP affiliate company. All rights reserved. I PUBLIC

Dataflow Plant Maintenance PM (SAP S/4HANA and SAP S/4HANA Cloud based on CDS-Views)

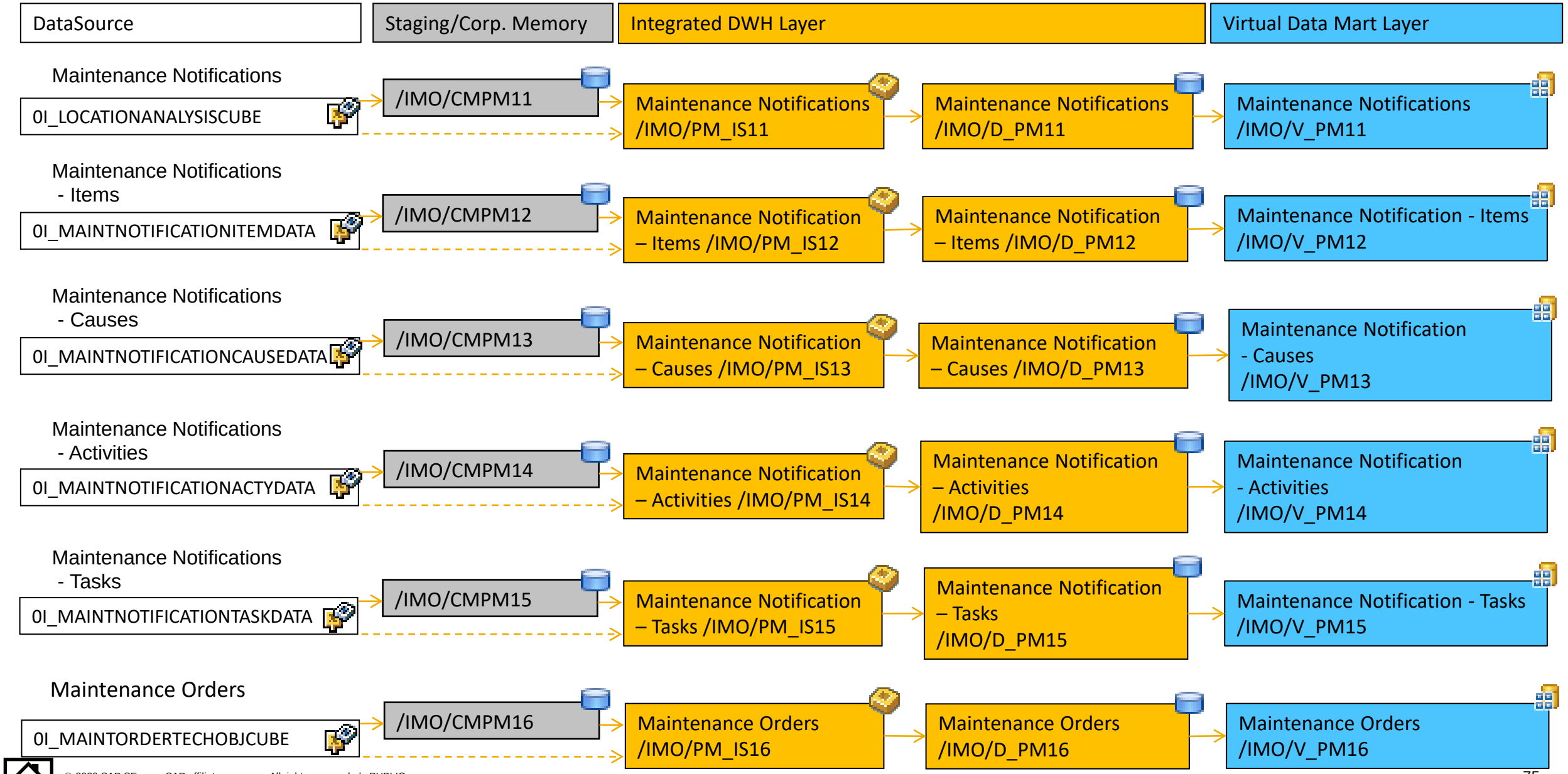

© 2020 SAP SE or an SAP affiliate company. All rights reserved. I PUBLIC

Delivered with BW4CONT 1.0 SP07, BW4CONT 2.0 SP0

Business Content Customer Service (CS)

Customer Service

- Notifications including items, causes, activities, tasks
- Service orders and operations

Delivered with BW4CONT 1.0 SP03, BW4CONT 2.0 SP0

- LSA++ Architecture incl. Staging/Corporate Memory
- Usage of DSO (advanced), CompositeProvider
- Virtual Data Mart Layer
- Higher level of detail (down to line item level)

Documentation

© 2020 SAP SE or an SAP affiliate company. All rights reserved. I PUBLIC

Dataflow Customer Service (CS)

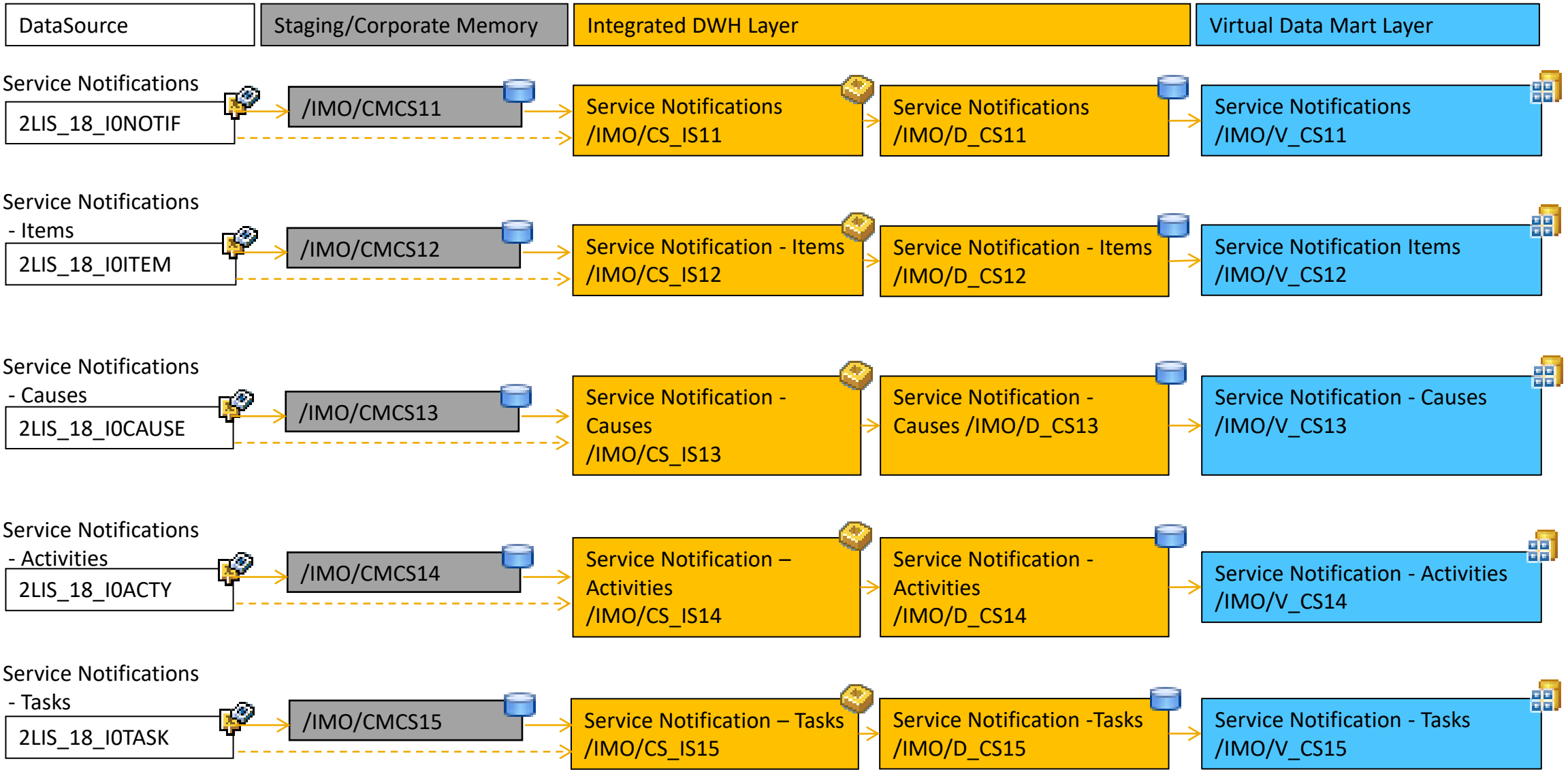

Delivered with BW4CONT 1.0 SP03, BW4CONT 2.0 SP0

© 2020 SAP SE or an SAP affiliate company. All rights reserved. I PUBLIC

Dataflow Customer Service (CS)

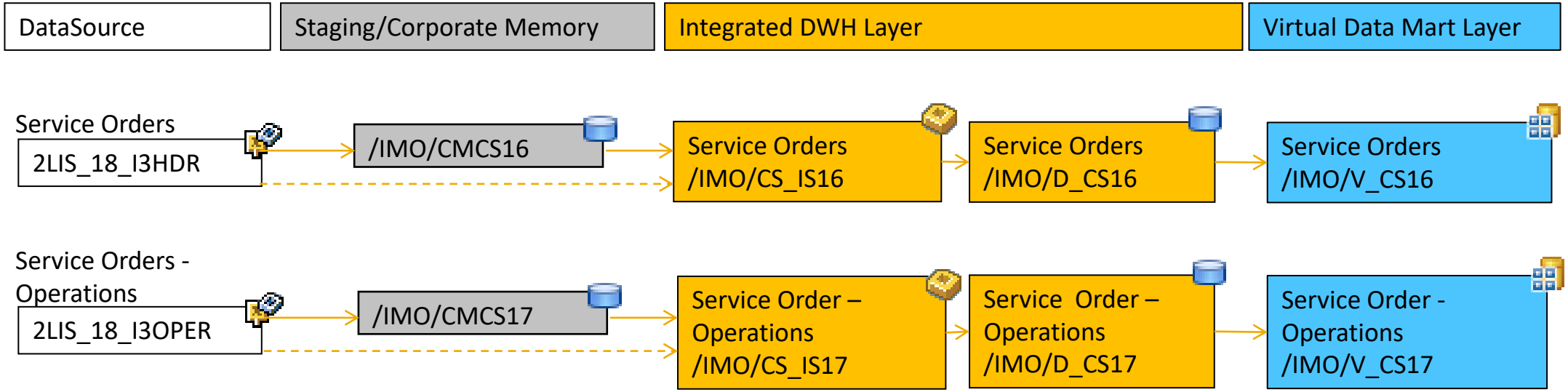

Delivered with BW4CONT 1.0 SP03, BW4CONT 2.0 SP0

© 2020 SAP SE or an SAP affiliate company. All rights reserved. I PUBLIC

Business Content Quality Management (QM)

Quality Management

- Quality Notifications
  including items, causes, activities, tasks
- Inspection Results*
  including general data, quantativ data, lot and usage decision

Delivered with BW4CONT 1.0 SP04, * SP05,
BW4CONT 2.0 SP0

- LSA++ Architecture incl. Staging/Corporate Memory
- Usage of DSO (advanced), CompositeProvider
- Virtual Data Mart Layer
- Higher level of detail (down to line item level)

Documentation

© 2020 SAP SE or an SAP affiliate company. All rights reserved. I PUBLIC

Dataflow Quality Management (QM)

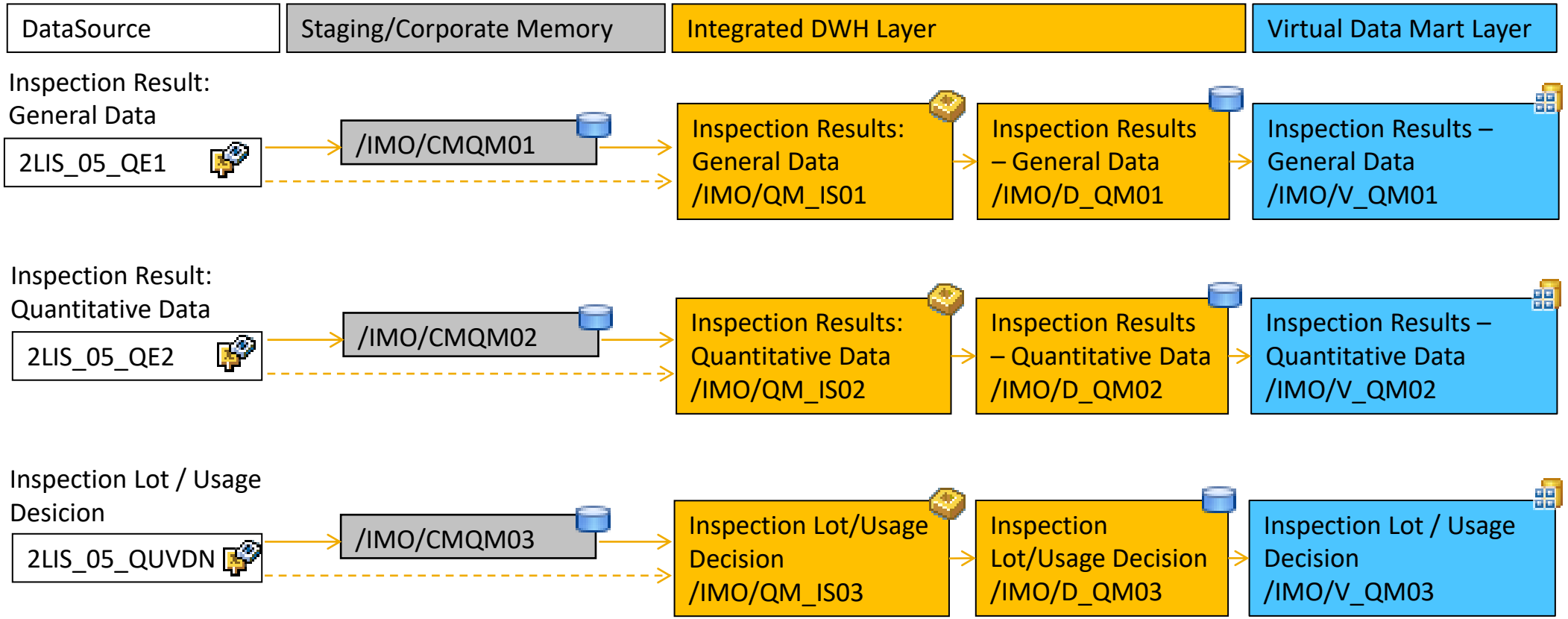

Delivered with BW4CONT 1.0 SP05, BW4CONT 2.0 SP0

© 2020 SAP SE or an SAP affiliate company. All rights reserved. I PUBLIC

Dataflow Quality Management (QM)

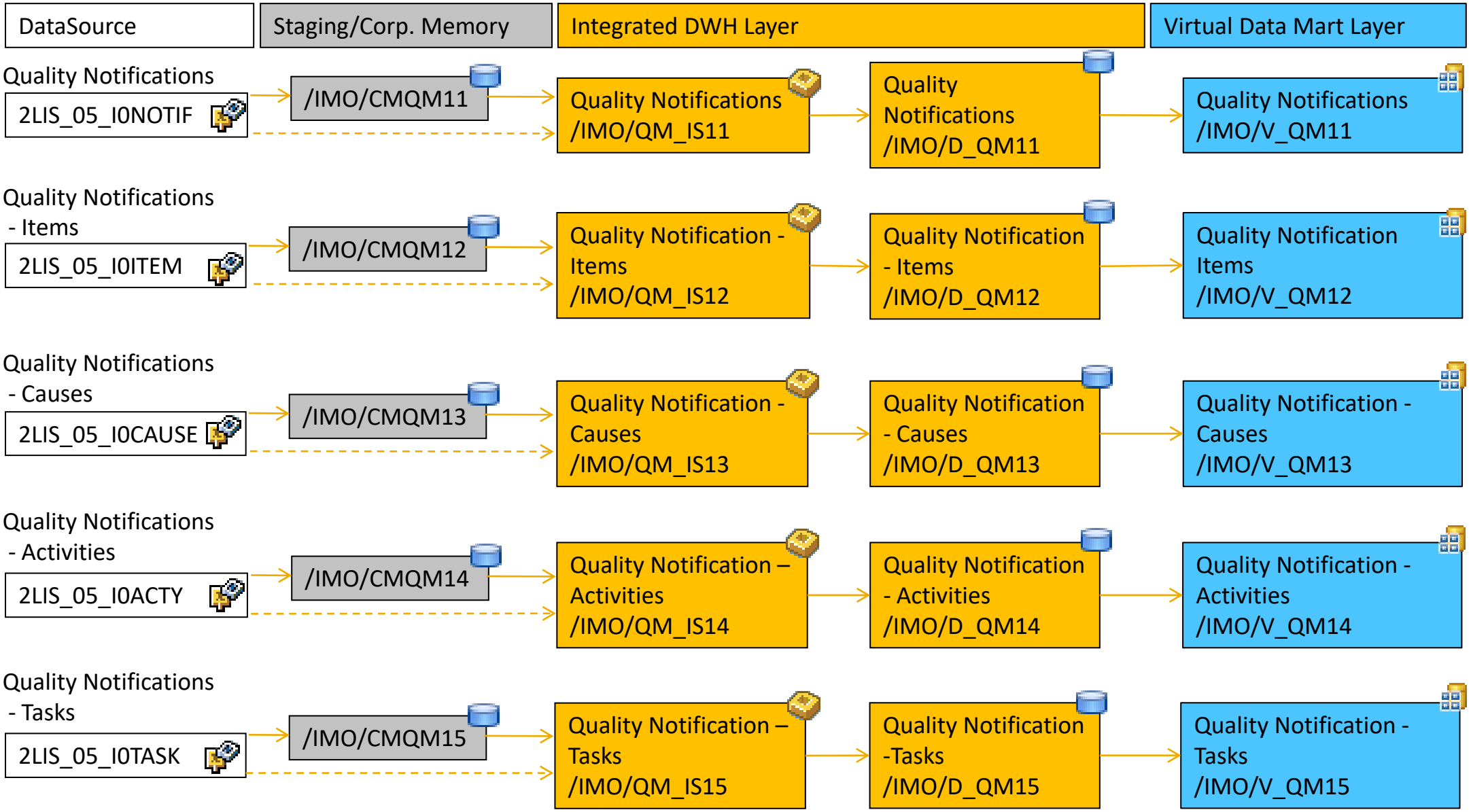

© 2020 SAP SE or an SAP affiliate company. All rights reserved. I PUBLIC

Delivered with BW4CONT 1.0 SP04, BW4CONT 2.0 SP0

Business Content Material Management (MM)

Material Management: Purchase Overview

Material Management: Invoice Verification

Purchasing (ERP MM-PUR)

- Purchasing Overview:
  - Purchase document, purchasing history on header, item and schedule line level
- Contract Management:
  - Purchasing contracts, scheduling agreements
  - Contract utilization
- Purchasing Accounting:
  - Accounting information for purchase orders
  - Cost center budget analysis
- Delivery Service:
  - Delivery KPIs on purchase item level

Invoice Verification (ERP MM-IV)

- Invoice receipts for purchase documents
- Comparison of different invoice amounts and variances
- Analysis of blocking reasons for payments

Documentation PUR
Documentation IV

- LSA++ Architecture incl. Staging/Corporate Memory
- Usage of DSO (advanced), CompositeProvider
- Virtual Data Mart Layer
- Higher level of detail (down to line item/schedule line level) for Data Acquisition

© 2020 SAP SE or an SAP affiliate company. All rights reserved. I PUBLIC

Dataflow Purchasing (MM-PUR)

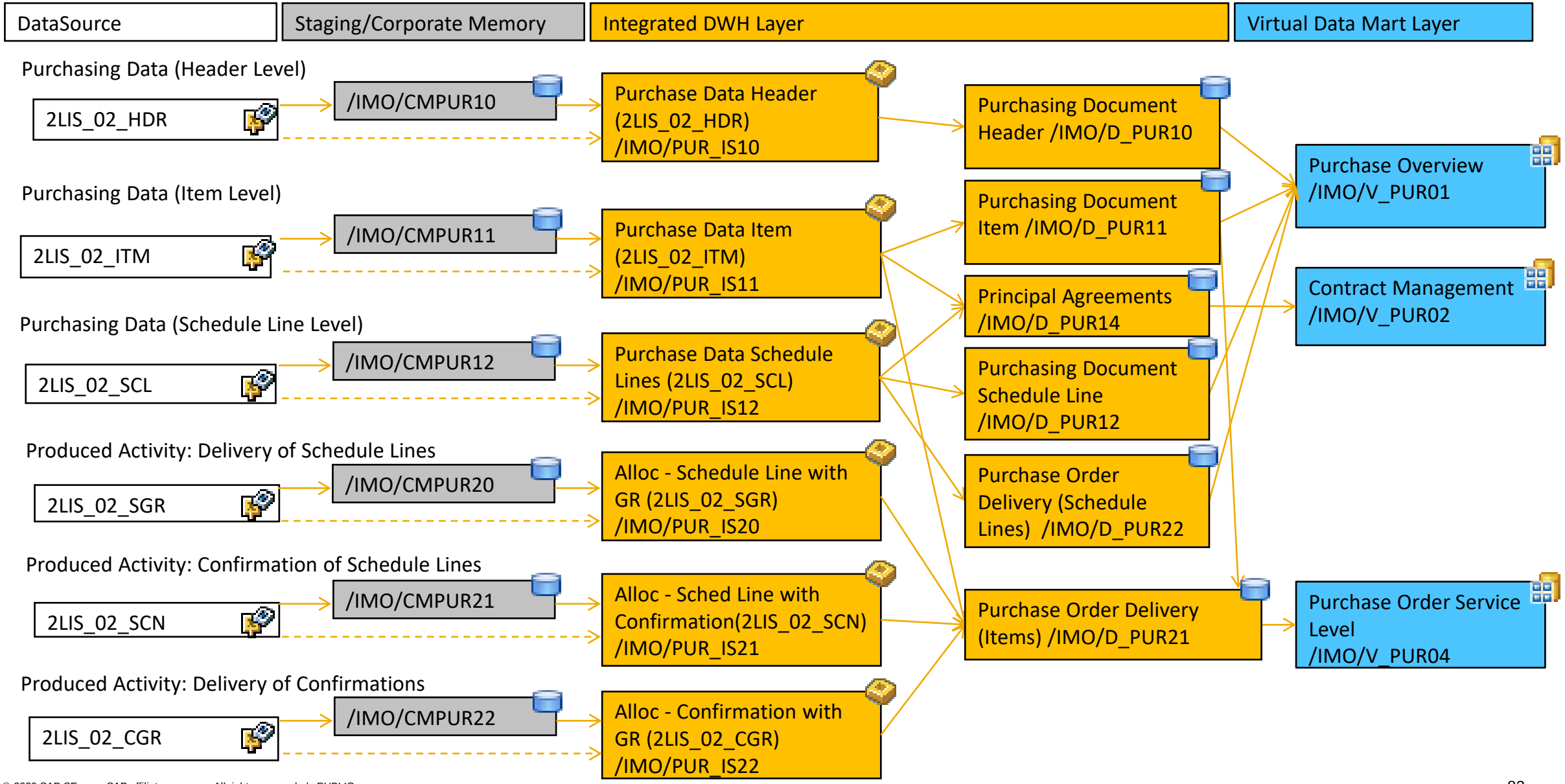

© 2020 SAP SE or an SAP affiliate company. All rights reserved. I PUBLIC

Dataflow Purchasing (MM-PUR)

Purchasing Accounting (ERP MM-PUR)

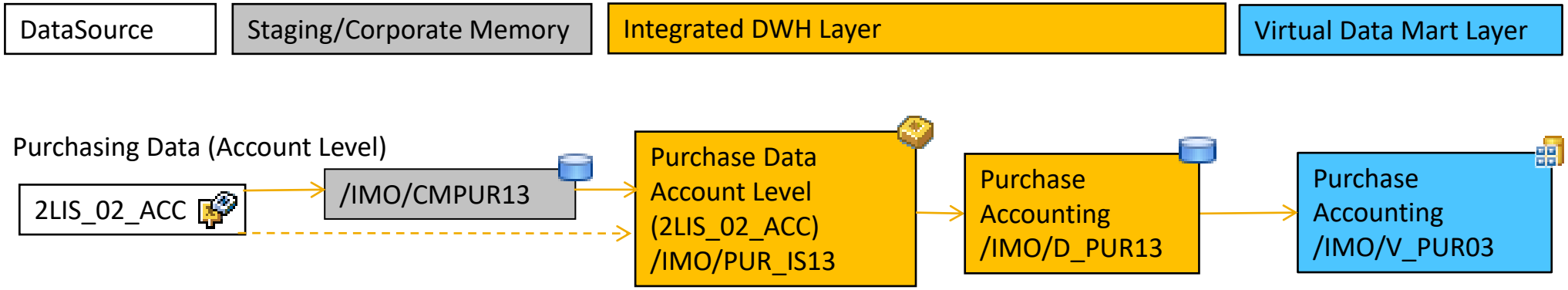

Invoice Verification (ERP MM-IV)

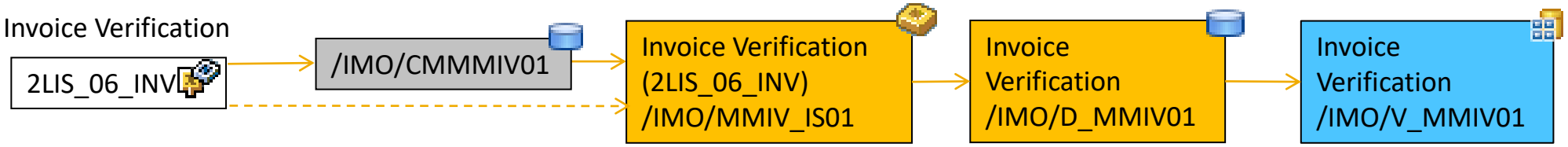

© 2020 SAP SE or an SAP affiliate company. All rights reserved. I PUBLIC

Business Content Inventory Management (MM-IM)

Material Management: Inventory Management

- Material Stock and Movements:
  - Stock values and quantities for different types of stocks, (total stock, valuated stock, special stocks and consignment stock)
  - Stock overview
  - Material range of coverage
  - Stock obsolescence and variance

SAP Note for SAP ERP / S/4HANA Inventory Management in SAP BW/4HANA: 2678507

- LSA++ Architecture incl. Staging/Corporate Memory
- Usage of DSO (advanced), CompositeProvider
- Virtual Data Mart Layer
- Higher level of detail for Movements

Documentation

© 2020 SAP SE or an SAP affiliate company. All rights reserved. I PUBLIC

Dataflow Inventory Management (MM-IM)

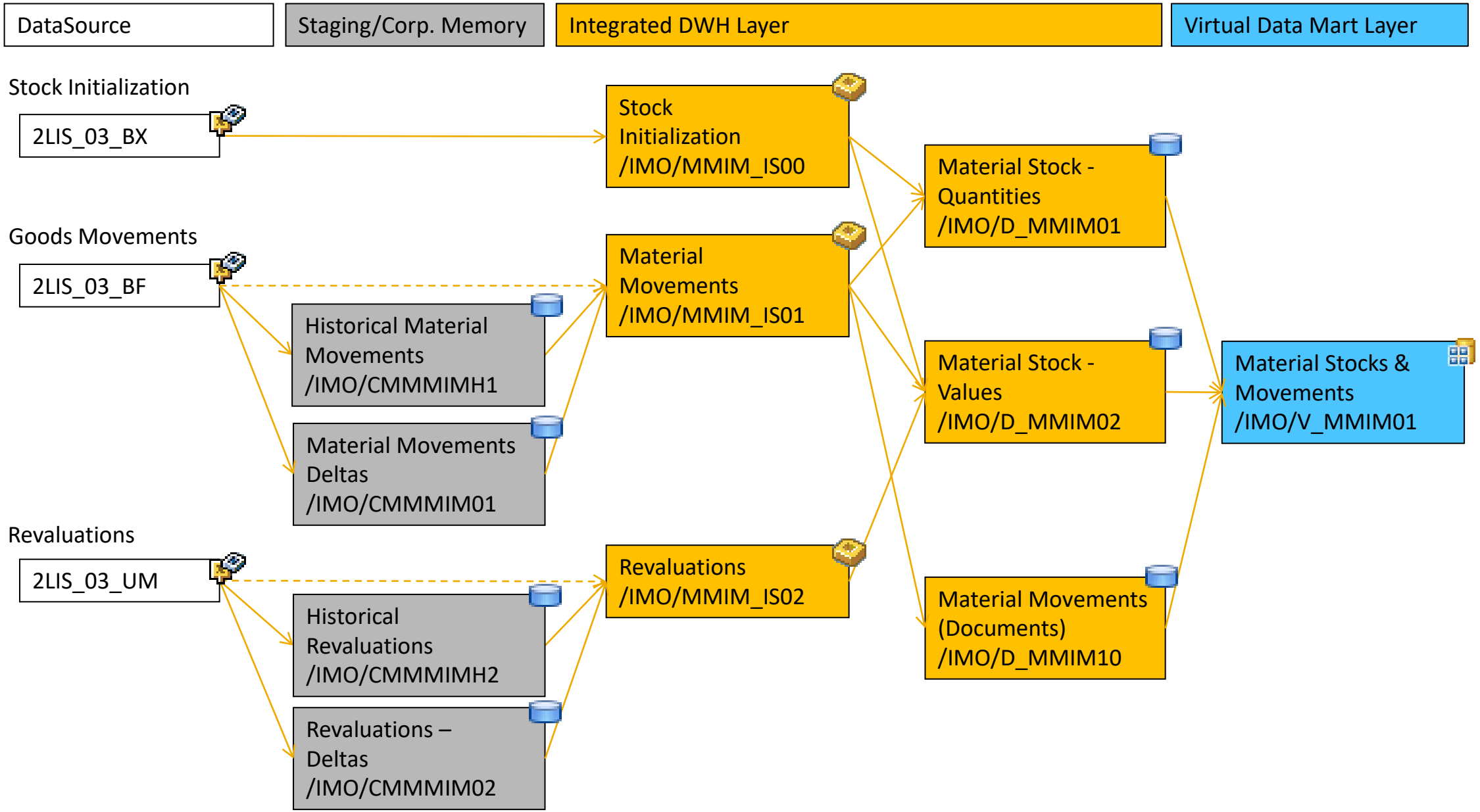

© 2020 SAP SE or an SAP affiliate company. All rights reserved. I PUBLIC

Business Content Production Planning and Controlling (PP, PP-PI)

Production Planning and Controlling

- Production Order Analysis:
  - Material view
  - Work center view
  - Components view
  - Capacity requirements and usage
- Data from PP (Production Planning) and PP-PI (Production Planning - Process Industries) is extracted

Delivered with BW4CONT 1.0 SP05, BW4CONT 2.0 SP0

- LSA++ Architecture incl. Staging/Corporate Memory

Documentation

© 2020 SAP SE or an SAP affiliate company. All rights reserved. I PUBLIC

Dataflow Production Planning and Controlling (PP/PP-PI)

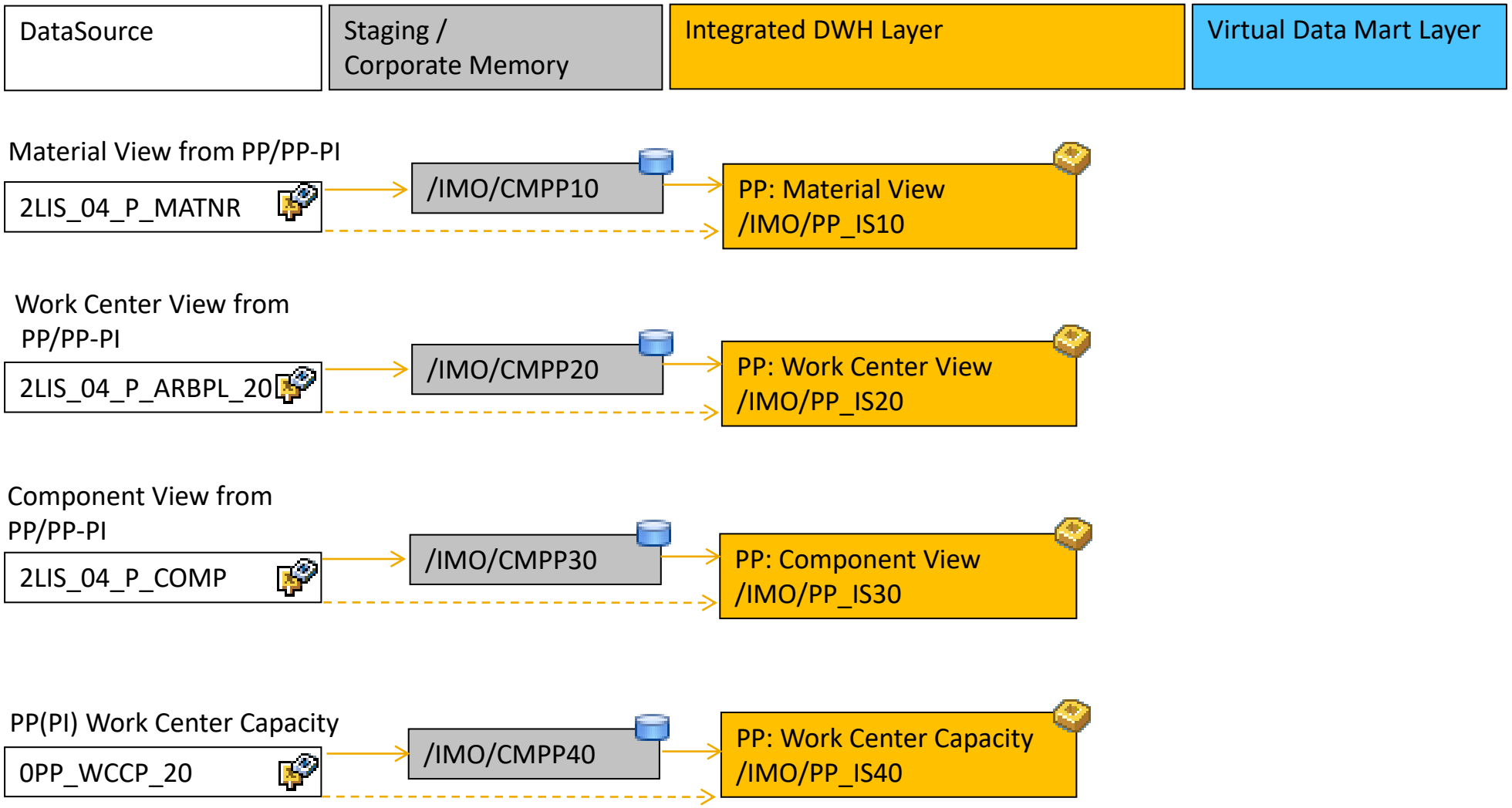

Delivered with BW4CONT SP05, BW4CONT 2.0 SP0

© 2020 SAP SE or an SAP affiliate company. All rights reserved. I PUBLIC

Business Content Extended Warehouse Management (EWM)

Extended Warehouse Management

- In- and Outbound Deliveries
- Delivery item related execution data *
- Proof of Delivery
- Value-Added Services
- Warehouse Orders and Tasks
- Exceptions
- Stocks
- Storage Bins
- Transportation Units
- Measurement Service Results
- Executed Workload

Delivered with BW4CONT 1.0 SP05, * SP06, BW4CONT 2.0 SP0

- LSA++ Architecture incl. Staging/Corporate Memory
- Usage of DSO (advanced), CompositeProvider
- Virtual Data Mart Layer
- Higher level of detail (down to line item level)

Documentation

© 2020 SAP SE or an SAP affiliate company. All rights reserved. I PUBLIC

Dataflow Extended Warehouse Management (EWM)

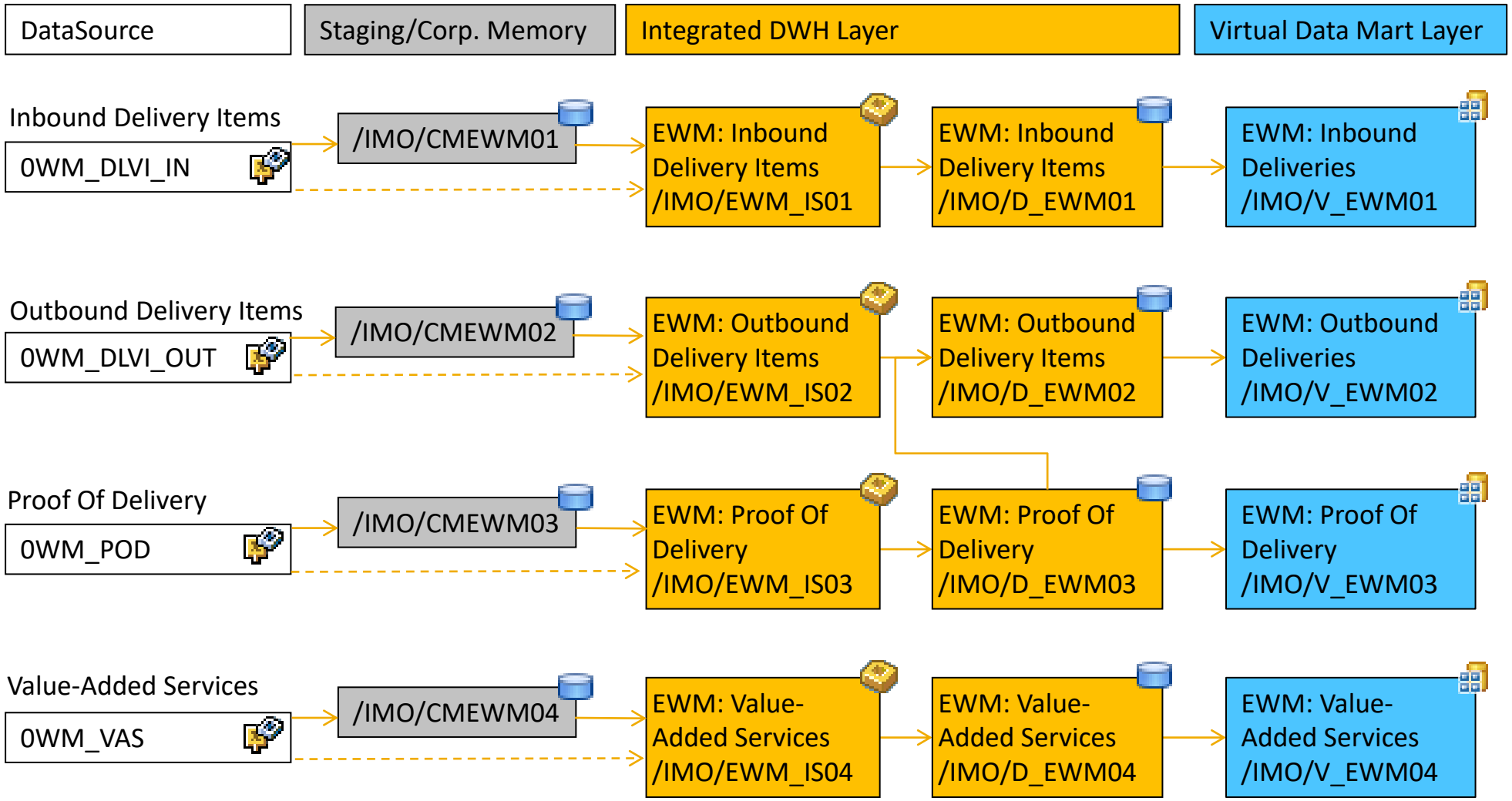

© 2020 SAP SE or an SAP affiliate company. All rights reserved. I PUBLIC

Delivered with BW4CONT 1.0 SP05, BW4CONT 2.0 SP0

Dataflow Extended Warehouse Management (EWM)

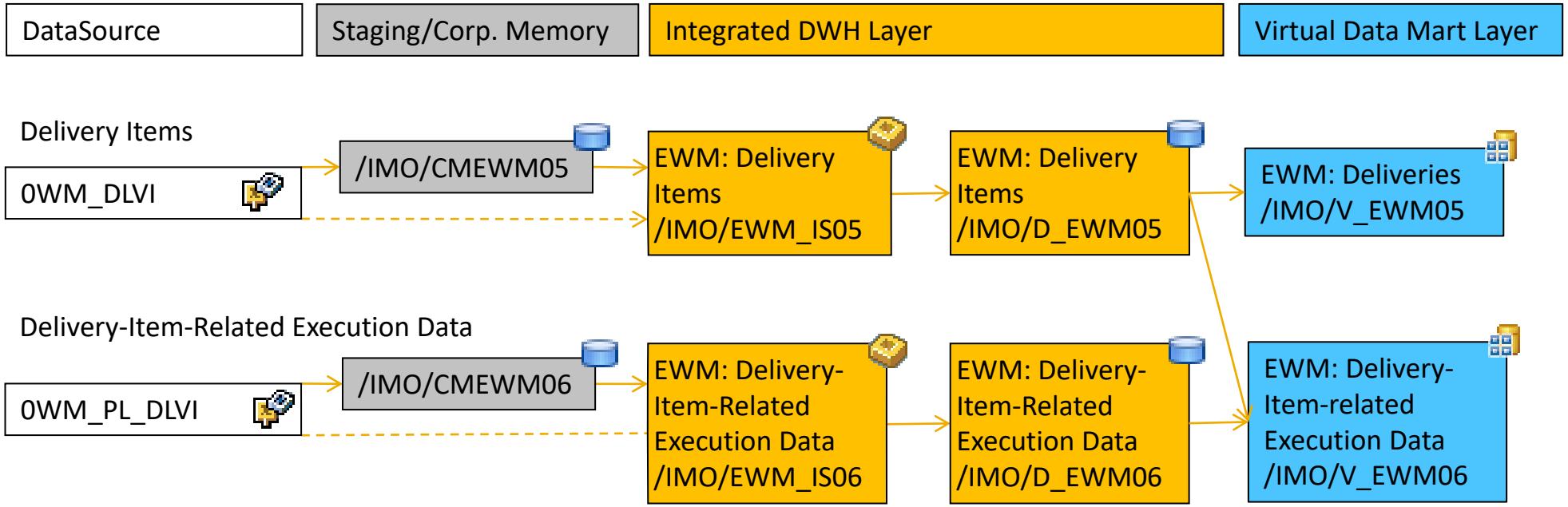

© 2020 SAP SE or an SAP affiliate company. All rights reserved. I PUBLIC

Delivered with BW4CONT 1.0 SP06 , BW4CONT 2.0 SP0

Dataflow Extended Warehouse Management (EWM)

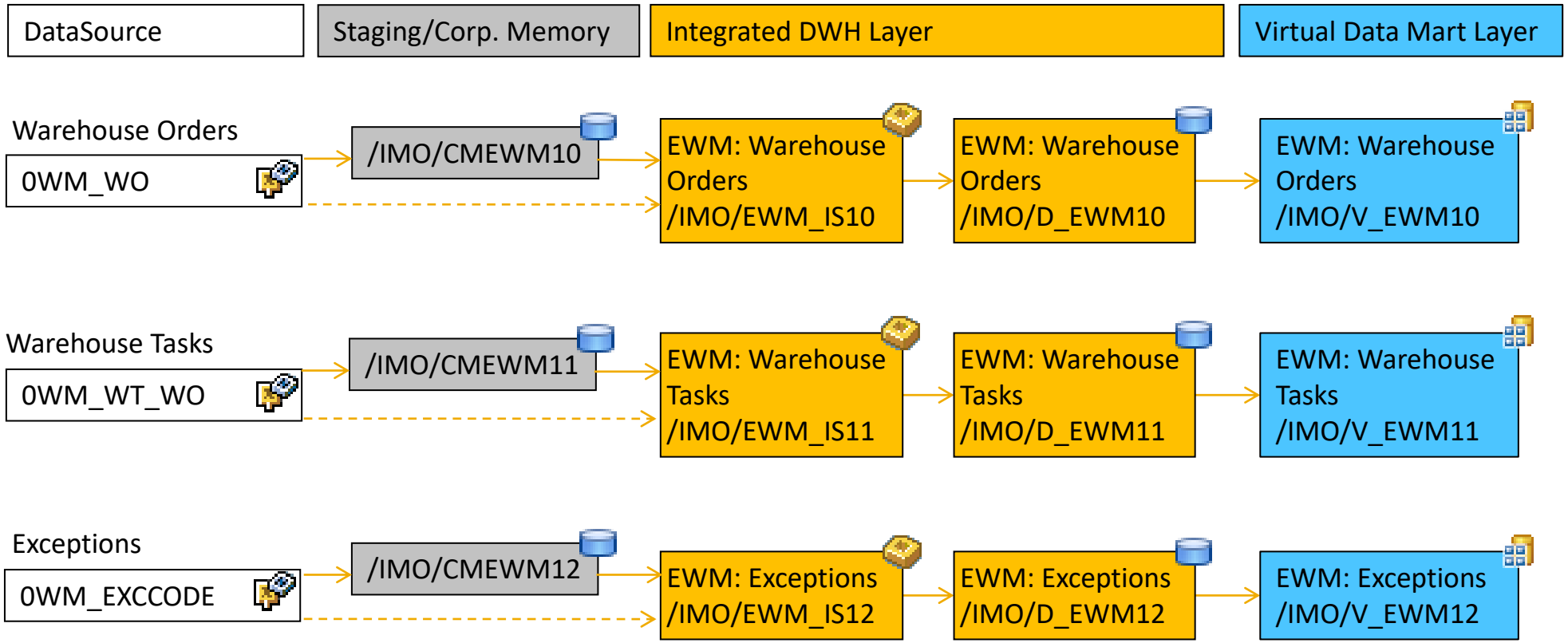

© 2020 SAP SE or an SAP affiliate company. All rights reserved. I PUBLIC

Delivered with BW4CONT 1.0 SP05 , BW4CONT 2.0 SP0

Dataflow Extended Warehouse Management (EWM)

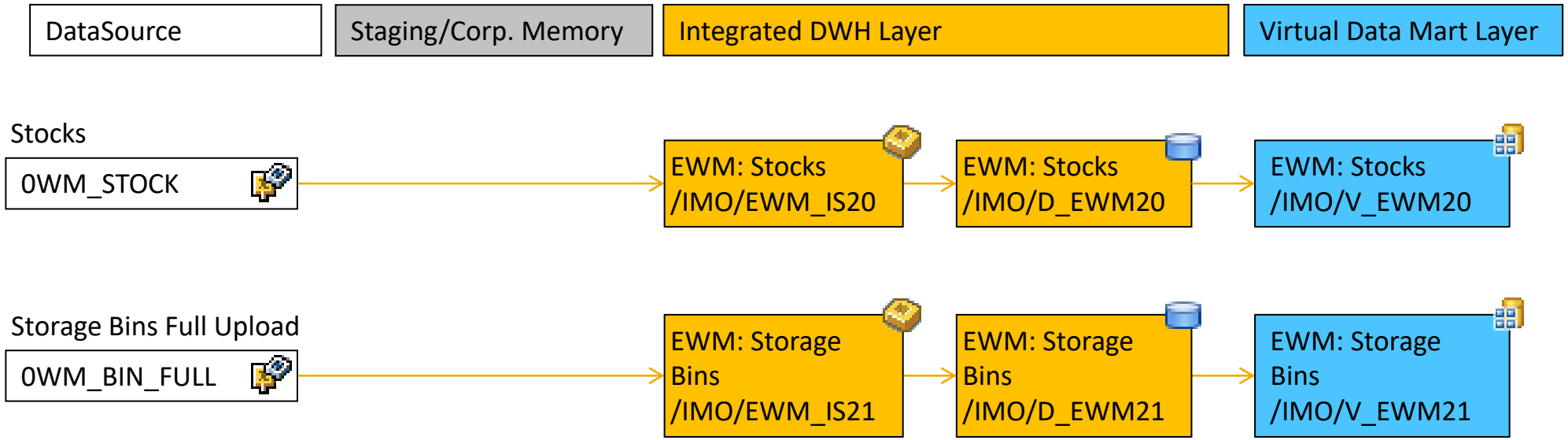

© 2020 SAP SE or an SAP affiliate company. All rights reserved. I PUBLIC

Delivered with BW4CONT 1.0 SP05, BW4CONT 2.0 SP0

Dataflow Extended Warehouse Management (EWM)

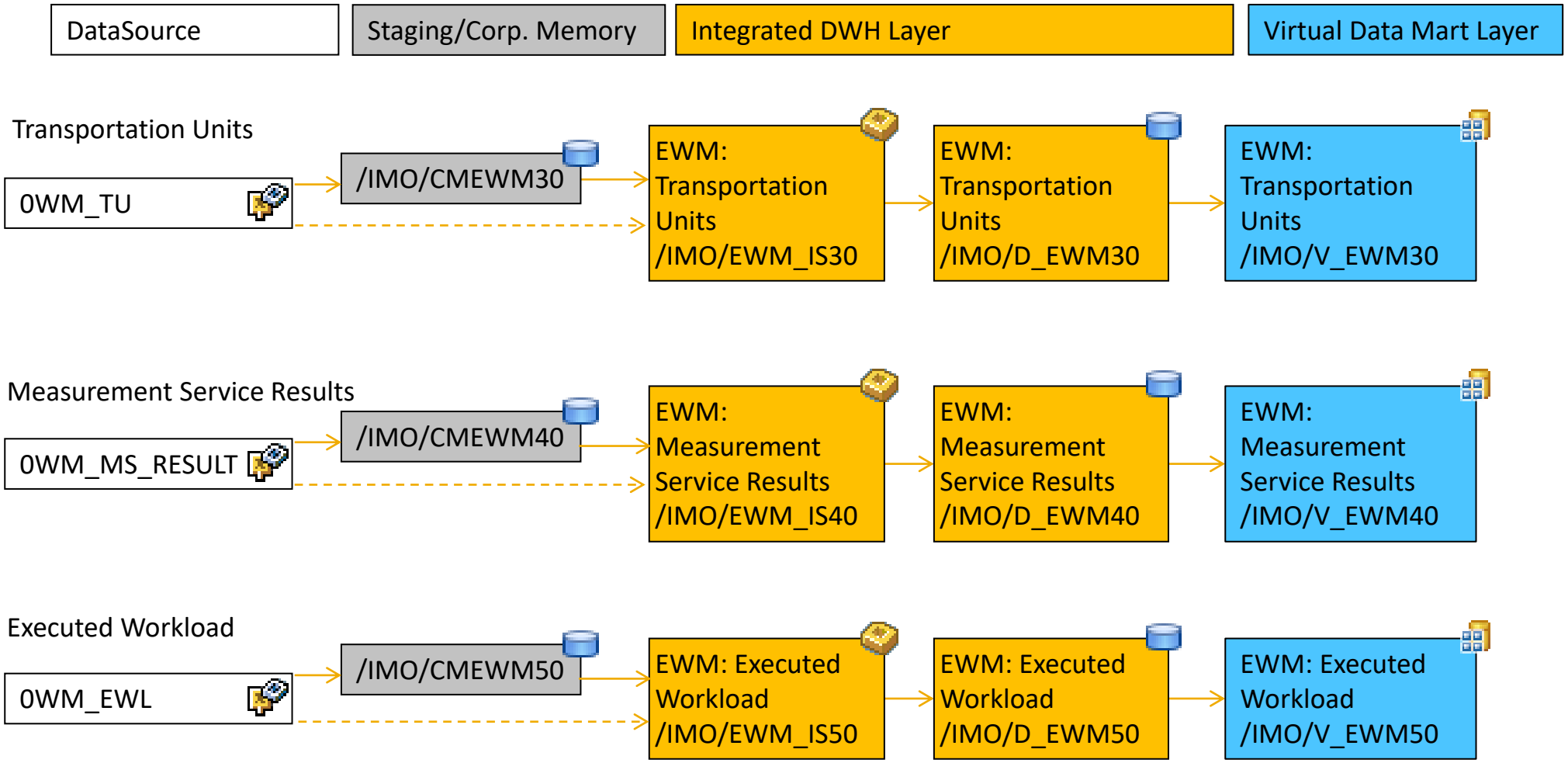

© 2020 SAP SE or an SAP affiliate company. All rights reserved. I PUBLIC

Delivered with BW4CONT 1.0 SP05, BW4CONT 2.0 SP0

Business Content Finance – Accounts Receivable (FI-AR)

Finance: Accounts Receivable

- Accounts Receivable Overview:
  - Accounts receivable line items
  - Current outstanding and overdue customer accounts
  - Invoice and payment history and trend

- LSA++ Architecture incl. Staging/Corporate Memory
- Usage of DSO (advanced), CompositeProvider
- Virtual Data Mart Layer
- Higher level of detail (down to line item level)

Documentation

© 2020 SAP SE or an SAP affiliate company. All rights reserved. I PUBLIC

Dataflow Finance – Accounts Receivable (FI-AR)

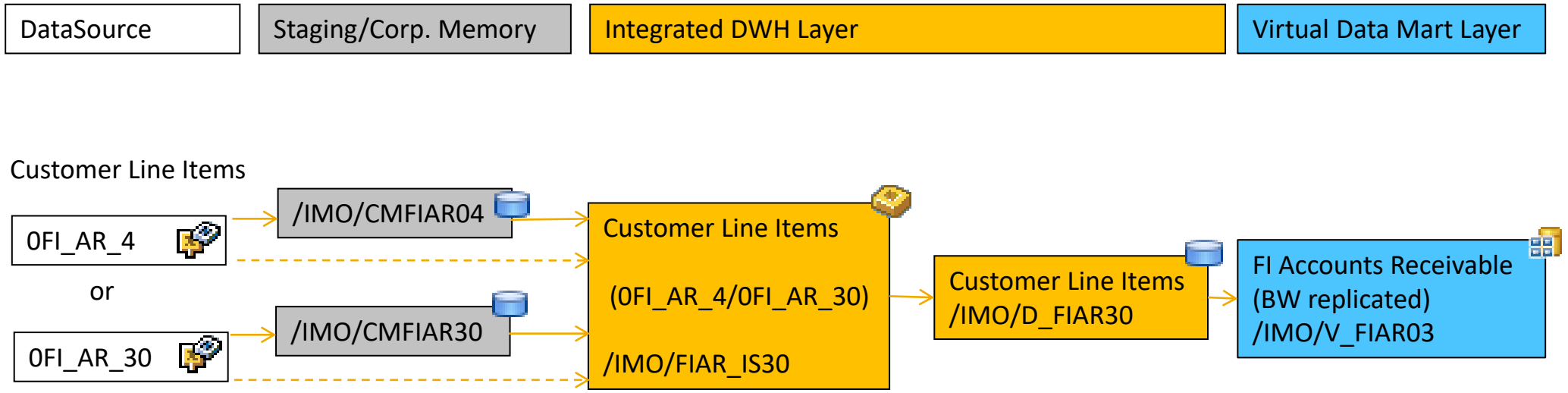

© 2020 SAP SE or an SAP affiliate company. All rights reserved. I PUBLIC

Business Content Finance – Accounts Payable (FI-AP)

Finance: Accounts Payable

- Accounts Payable Overview:
  - Accounts payable line items
  - Vendor line item overdue analysis
  - Vendor line item due date analysis

- LSA++ Architecture incl. Staging/Corporate Memory
- Usage of DSO (advanced), CompositeProvider
- Virtual Data Mart Layer
- Higher level of detail (down to line item level)

Documentation

© 2020 SAP SE or an SAP affiliate company. All rights reserved. I PUBLIC

Dataflow Finance – Accounts Payable (FI-AP)

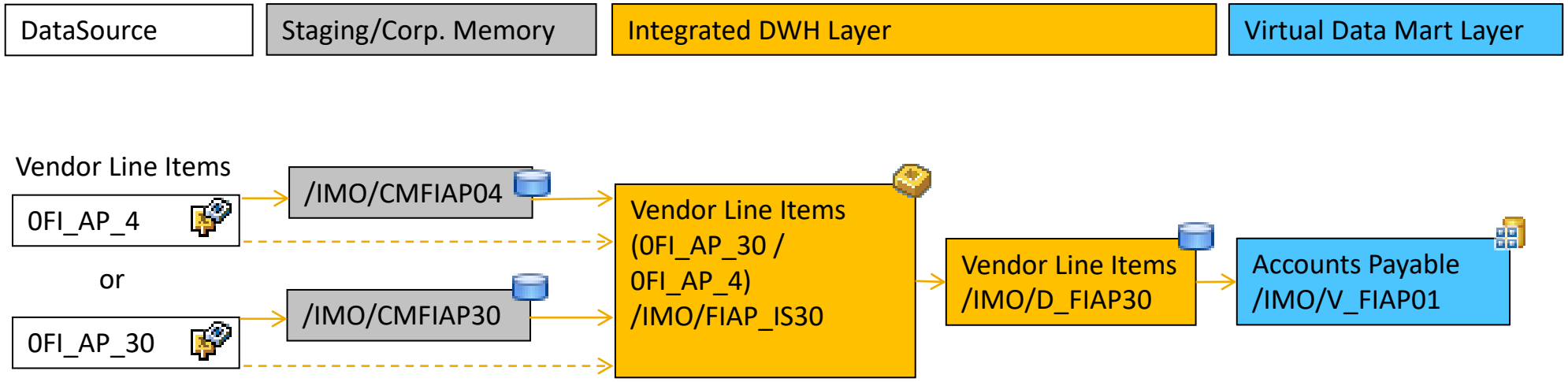

© 2020 SAP SE or an SAP affiliate company. All rights reserved. I PUBLIC

Business Content Finance – Asset Accounting (FI-AA)

Finance: Asset Accounting

- Asset Accounting Overview:
  - Asset Accounting line items on main asset number and asset sub-number level
  - Asset History Sheet
  - Transaction Data Report
  - Depreciations Posted Analysis

- LSA++ Architecture incl. Staging/Corporate Memory
- Usage of DSO (advanced), CompositeProvider
- Virtual Data Mart Layer
- Higher level of detail (down to line item level)

Documentation

© 2020 SAP SE or an SAP affiliate company. All rights reserved. I PUBLIC

Dataflow Finance – Asset Accounting (FI-AA)

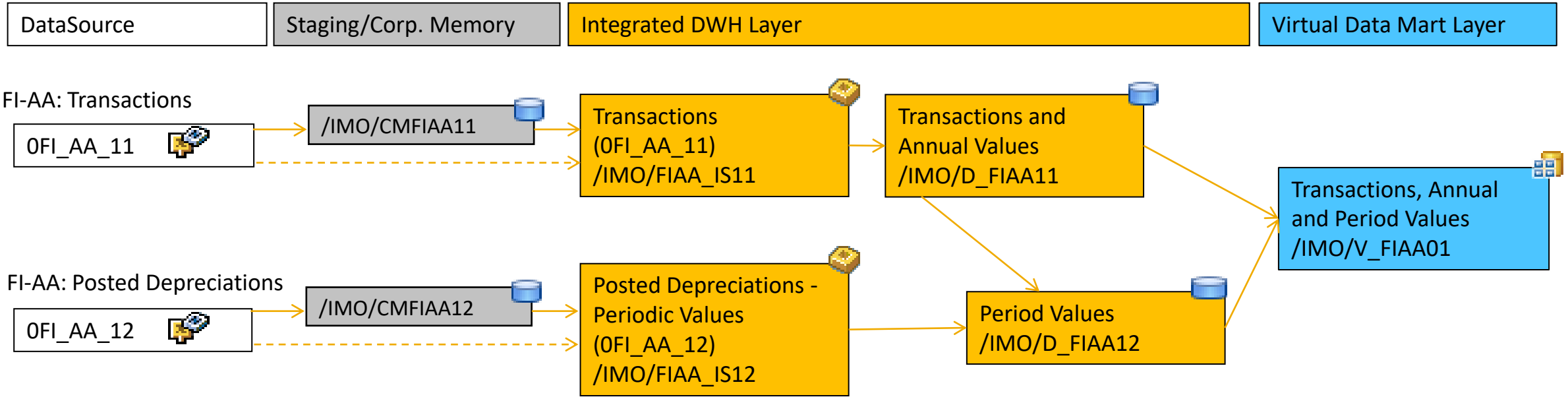

© 2020 SAP SE or an SAP affiliate company. All rights reserved. I PUBLIC

Business Content Finance – General Ledger (FI-GL)

Finance: General Ledger

General Ledger Overview:

- Accounting data on aggregated (balance) as well as accounting document item level
- Actuals Balance and Flow comparison
- Actuals/plan/budget comparison

New General Ledger Overview:

- Accounting data on aggregated (balance) as well as accounting document item level
- Actuals Balance and Flow comparison
- Actuals/plan/budget comparison
- Financial Statements*

SAP S/4HANA Finance based on ACDOCA **

- LSA++ Architecture incl. Staging/Corporate Memory
- Usage of DSO (advanced), CompositeProvider
- Virtual Data Mart Layer
- Higher level of detail (down to line item level)

Documentation

* Delivered with BW4CONT 1.0 SP03 , BW4CONT 2.0 SP0
** Delivered with BW4CONT 1.0 SP16 , BW4CONT 2.0 SP06

© 2020 SAP SE or an SAP affiliate company. All rights reserved. I PUBLIC

Dataflow Finance – General Ledger (FI-GL)

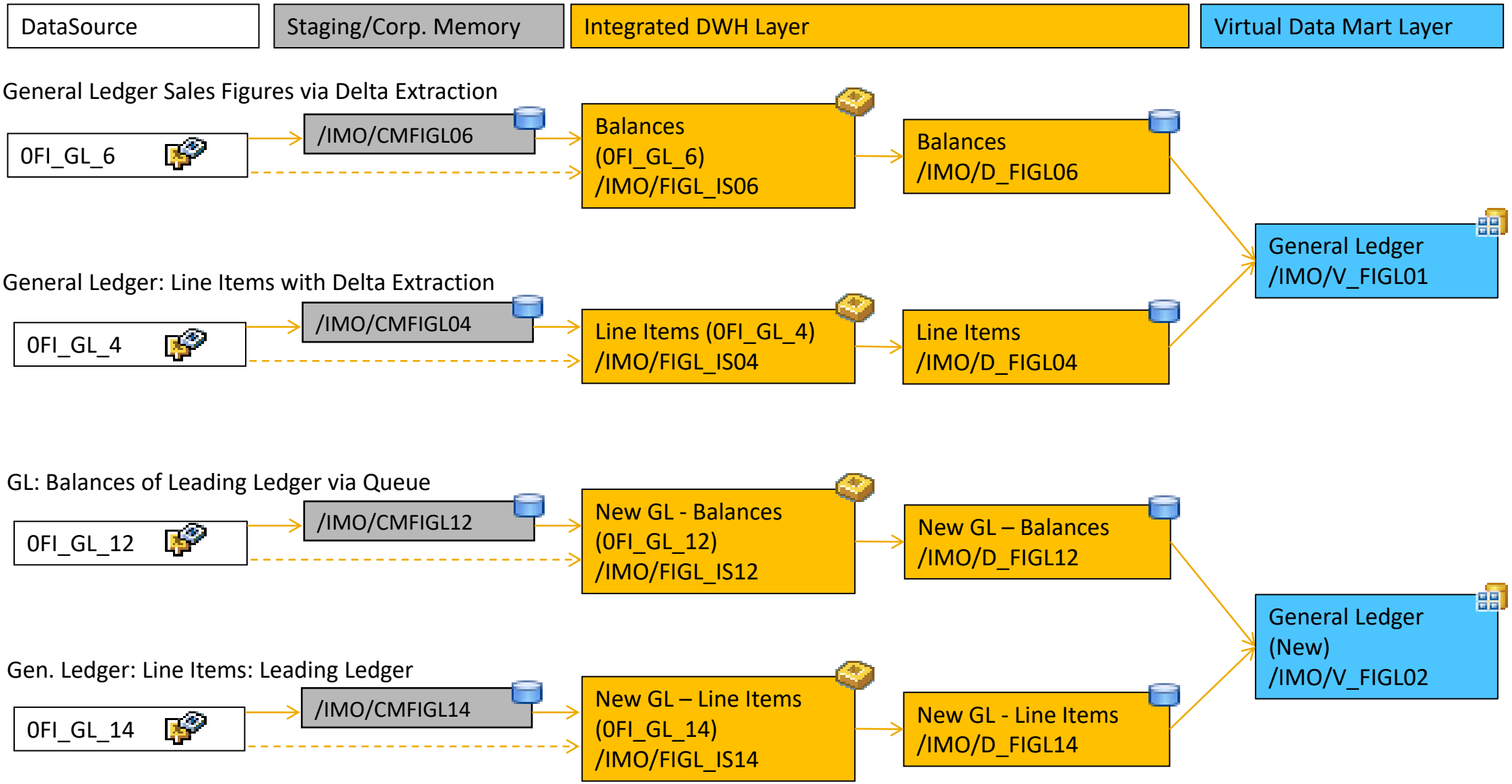

© 2020 SAP SE or an SAP affiliate company. All rights reserved. I PUBLIC

Dataflow Finance – General Ledger (FI-GL)

Integrated DWH Layer

Virtual Data Mart Layer

BAdI Provider

New GL - Balances
/IMO/D_FIGL12

Balance Sheet Reporting
3BVBFIGL01

Financial Statements
/IMO/V_FIGL03

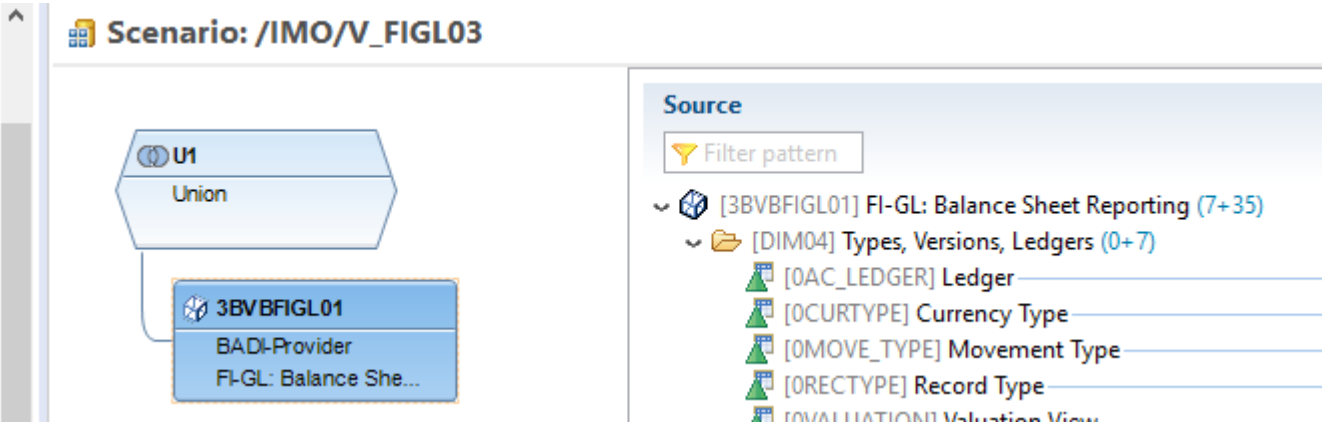

Delivered with BW4CONT 1.0 SP03 , BW4CONT 2.0 SP0

© 2020 SAP SE or an SAP affiliate company. All rights reserved. I PUBLIC

Business Content SAP S/4HANA Finance

Finance

SAP S/4HANA

SAP S/4HANA Cloud

SAP S/4HANA Finance Universal Journal:

- Foundation DSO as base for custom built analysis scenarios
- Updated master data and text provisioning
- Based on CDS-View extraction
- Enhanced delta mechanism (CDC-Delta)

- LSA++ Architecture incl. Staging/Corporate Memory
- Usage of DSO (advanced)
- Higher level of detail (down to line item level)

Documentation

** Delivered with BW4CONT 1.0 SP16 , BW4CONT 2.0 SP06

© 2020 SAP SE or an SAP affiliate company. All rights reserved. I PUBLIC

Dataflow SAP S/4HANA Finance

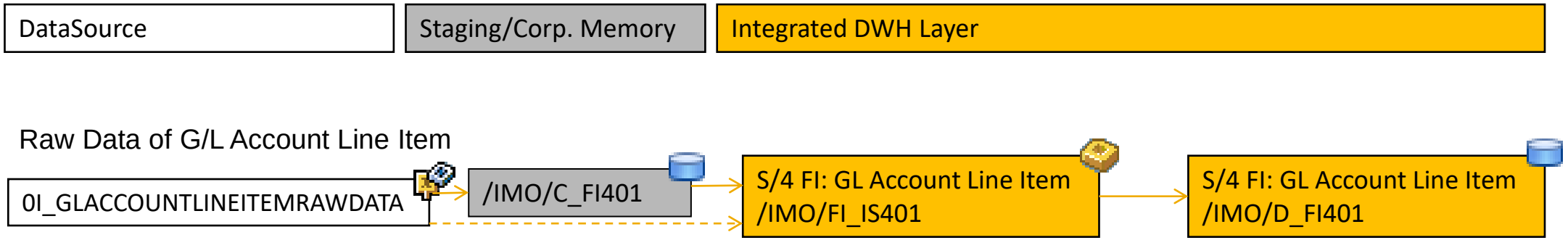

** Delivered with BW4CONT 1.0 SP16 , BW4CONT 2.0 SP06

© 2020 SAP SE or an SAP affiliate company. All rights reserved. I PUBLIC

Business Content Contract Accounting (FI-CA)

Finance: Contract Accounting

- Contract Accounts:
  - Contract Account
  - Invoice Data
  - Business Partner Items
  - Returns, Payments
  - Cash Management, Revenue Distribution

- LSA++ Architecture incl. Staging/Corporate Memory
- Usage of DSO (advanced), CompositeProvider
- Virtual Data Mart Layer
- Higher level of detail (down to line item level)

Documentation

© 2020 SAP SE or an SAP affiliate company. All rights reserved. I PUBLIC

Dataflow Contract Accounting (FI-CA)

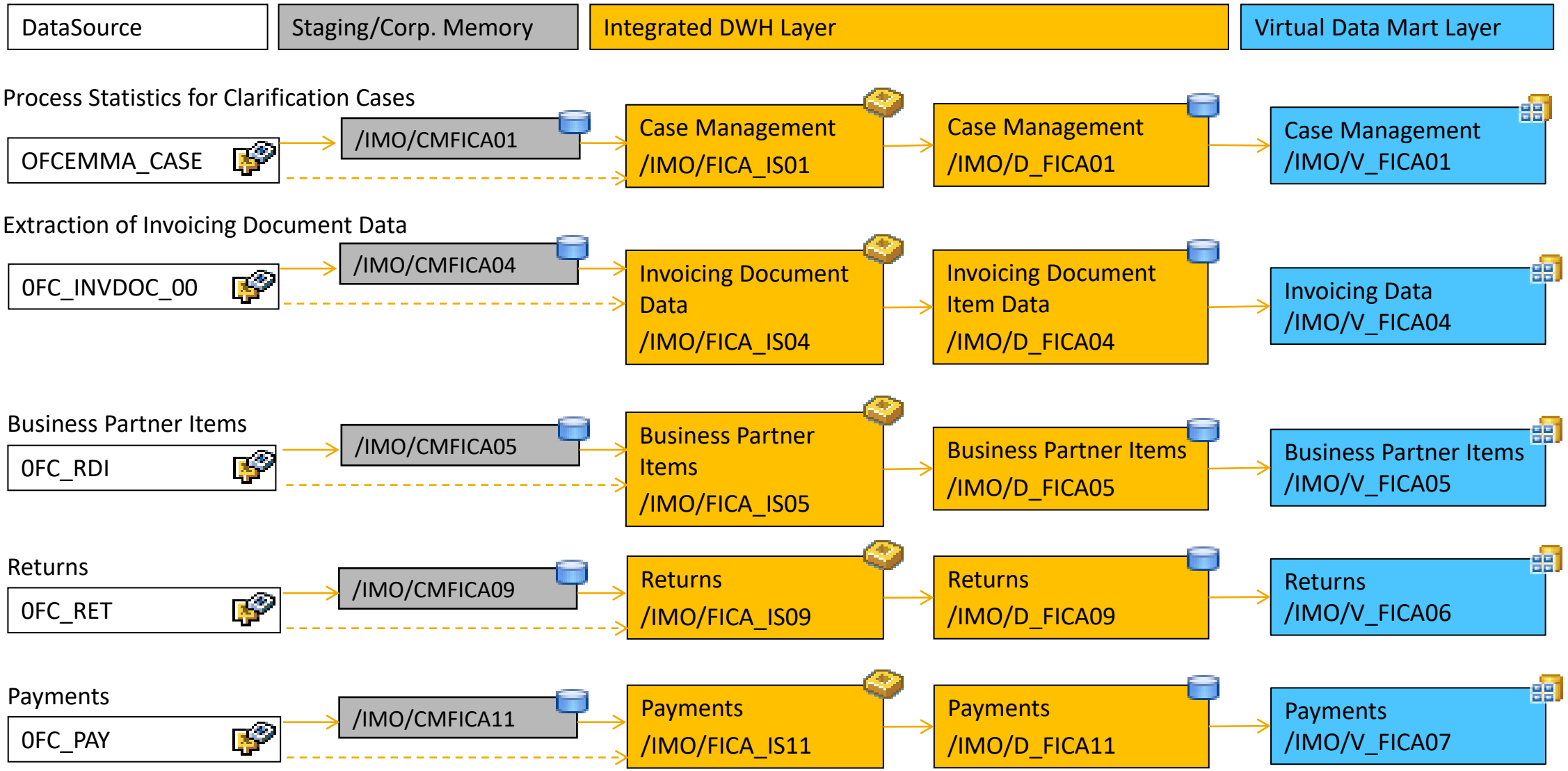

© 2020 SAP SE or an SAP affiliate company. All rights reserved. I PUBLIC

Dataflow Contract Accounting (FI-CA)

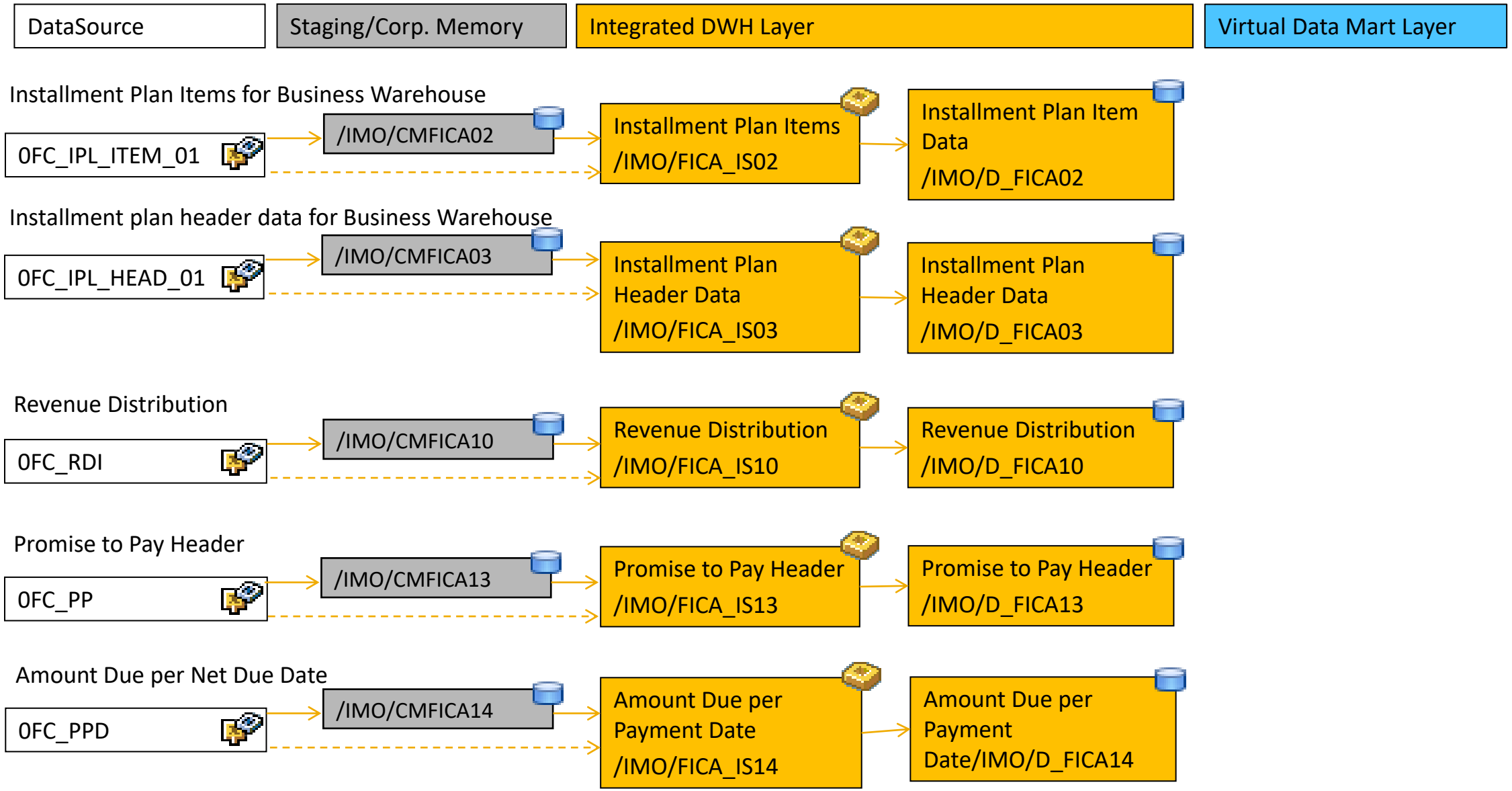

© 2020 SAP SE or an SAP affiliate company. All rights reserved. I PUBLIC

Dataflow Contract Accounting (FI-CA)

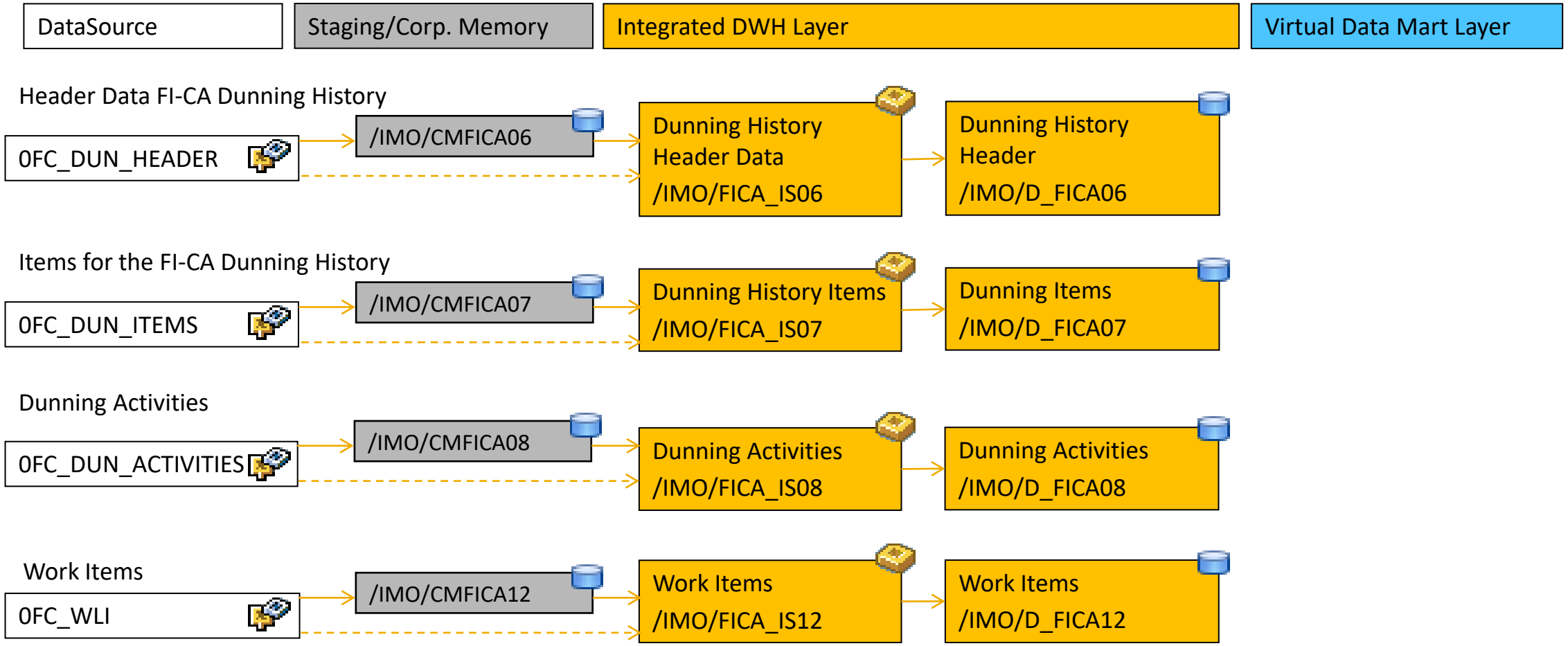

© 2020 SAP SE or an SAP affiliate company. All rights reserved. I PUBLIC

Dataflow Contract Accounting (FI-CA)

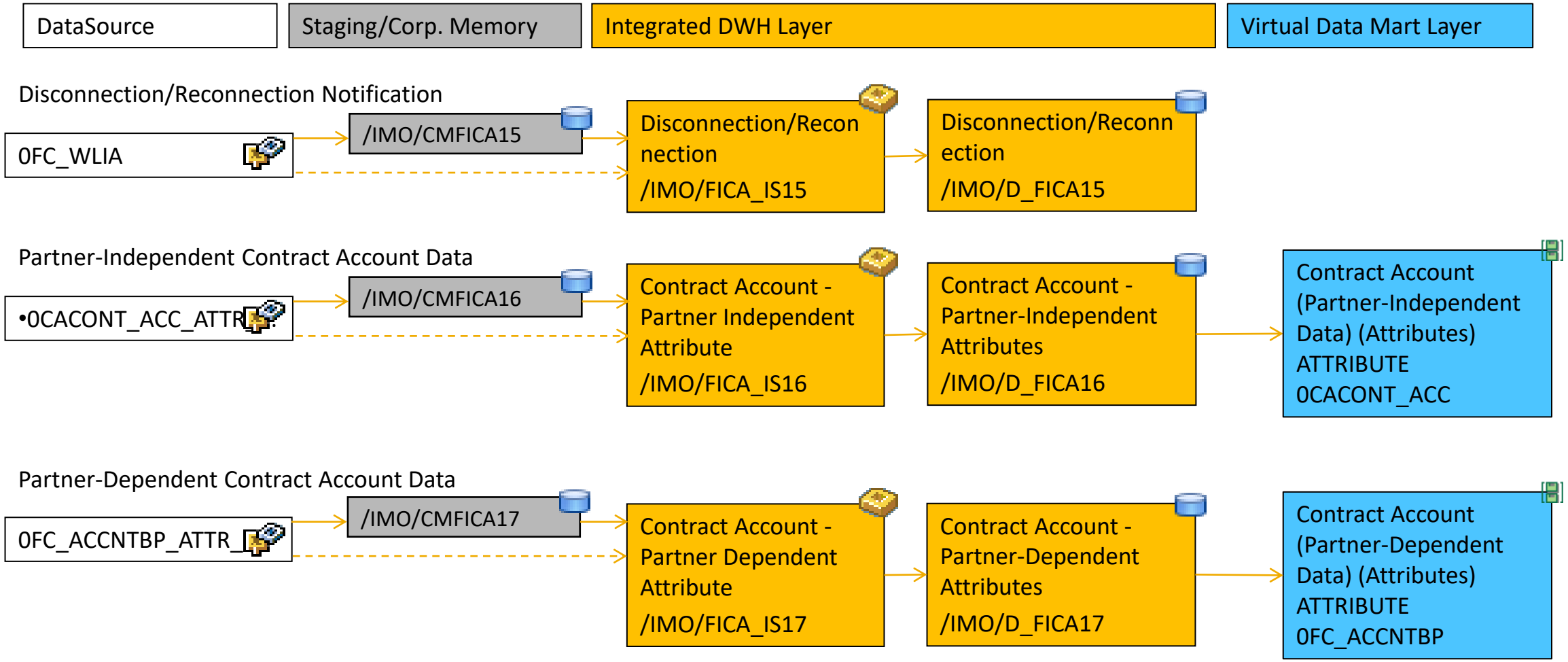

© 2020 SAP SE or an SAP affiliate company. All rights reserved. I PUBLIC

Business Content Public Sector – Funds Management (PSM-FM)

Finance: Funds Mgmt.

- Commitment Line Items in Funds Management
- FI Line Items in Funds Management
- CO Line Items in Funds Management
- Budget Line Items (FM-BCS)
- Budget Entry Documents (FM-BCS)
- Consumable Budget and Consumed Amount (FM-BCS AVC)
- Revenues Increasing the Budget (FM-BCS RIB)
- Planning function type for retraction of Budget Plan data *
- DSOs for Planning for FM Budgets (BU) and for FM Budget Entry Documents (BD) **

- LSA++ Architecture incl. Staging/Corporate Memory
- Usage of DSO (advanced), CompositeProvider
- Virtual Data Mart Layer
- Higher level of detail (down to line item level)

Documentation

Delivered with BW4CONT 1.0 SP12 and BW4CONT 2.0 SP02

* Delivered with BW4CONT 1.0 SP13 and BW4CONT 2.0 SP03

** Delivered with BW4CONT 1.0 SP13 and BW4CONT 2.0 SP04

© 2020 SAP SE or an SAP affiliate company. All rights reserved. I PUBLIC

Dataflow Public Sector Management – Funds Management (PSM-FM)

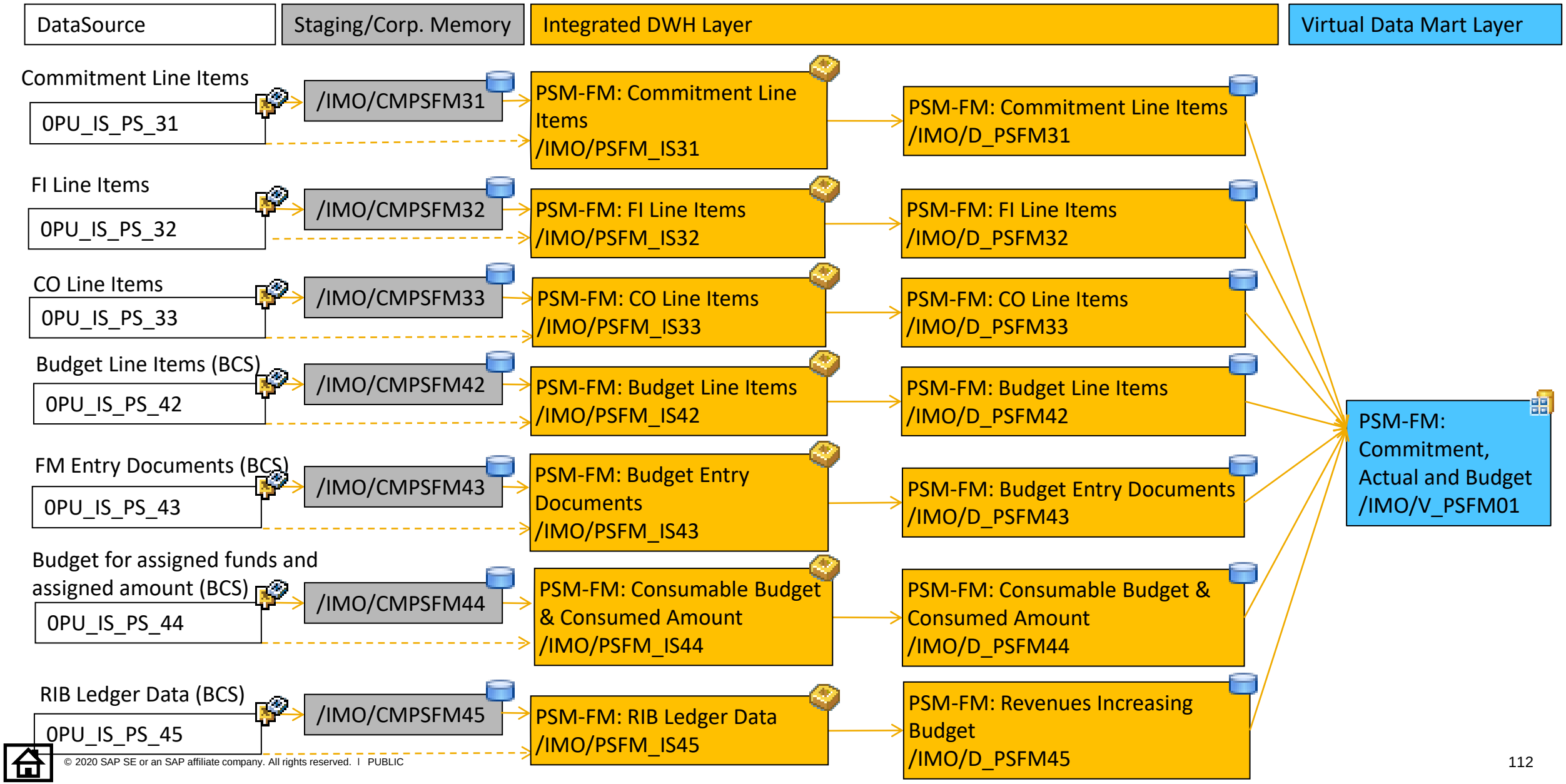

© 2020 SAP SE or an SAP affiliate company. All rights reserved. I PUBLIC

Dataflow Public Sector Management – Funds Management (PSM-FM) Planning

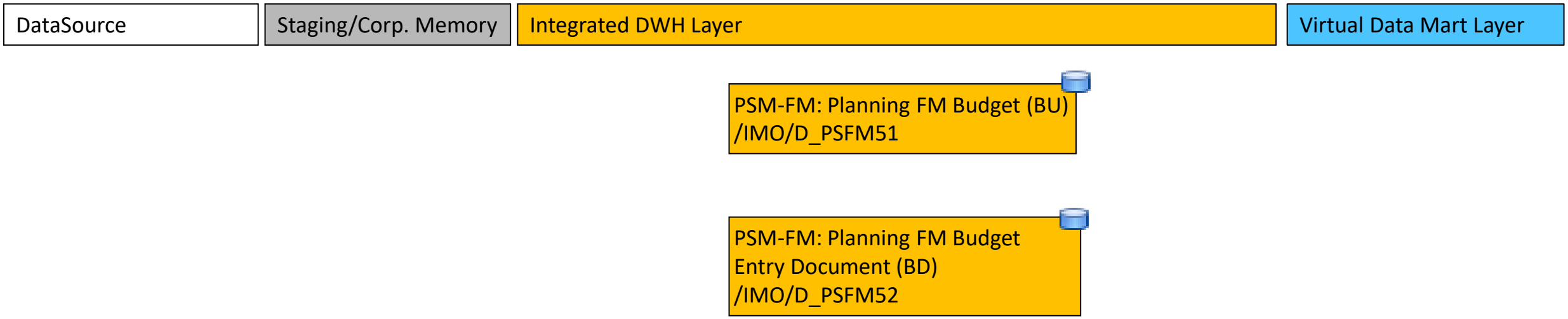

DSOs can be used with planning function type for retraction of Budget Plan data

Delivered with BW4CONT 1.0 SP13 and BW4CONT 2.0 SP04

© 2020 SAP SE or an SAP affiliate company. All rights reserved. I PUBLIC

Business Content Controlling – Overhead Cost Controlling (CO-OM)

Controlling: Overhead Cost Controlling

- Cost Center Accounting (CO-OM-CCA)
- Overhead Cost Orders (CO-OM-OPA)
- Overhead Projects (CO-OM-NTW*, -WBS, -NWA*, - NAE*)

- Delta-enabled actual, planned costs**** and commitments
- Statistical key figures
- Actual and commitment data on line item level
- Planning function type for retraction of primary costs (ERP CO)**
- Extended planning function type for retraction of statistical key figures, Activities/Prices and Activity Input***

- LSA++ Architecture incl. Staging/Corporate Memory
- Usage of DSO (advanced), CompositeProvider
- Virtual Data Mart Layer
- Higher level of detail (down to line item level)

* Delivered with BW4CONT 1.0 SP04 , BW4CONT 2.0 SP0

** Delivered with BW4CONT 1.0 SP07, BW4CONT 2.0 SP0

*** Delivered with BW4CONT 1.0 SP09, BW4CONT 2.0 SP0

**** Check note 2998755

Documentation

© 2020 SAP SE or an SAP affiliate company. All rights reserved. I PUBLIC

Dataflow Controlling – Overhead Cost Controlling (CO-OM)

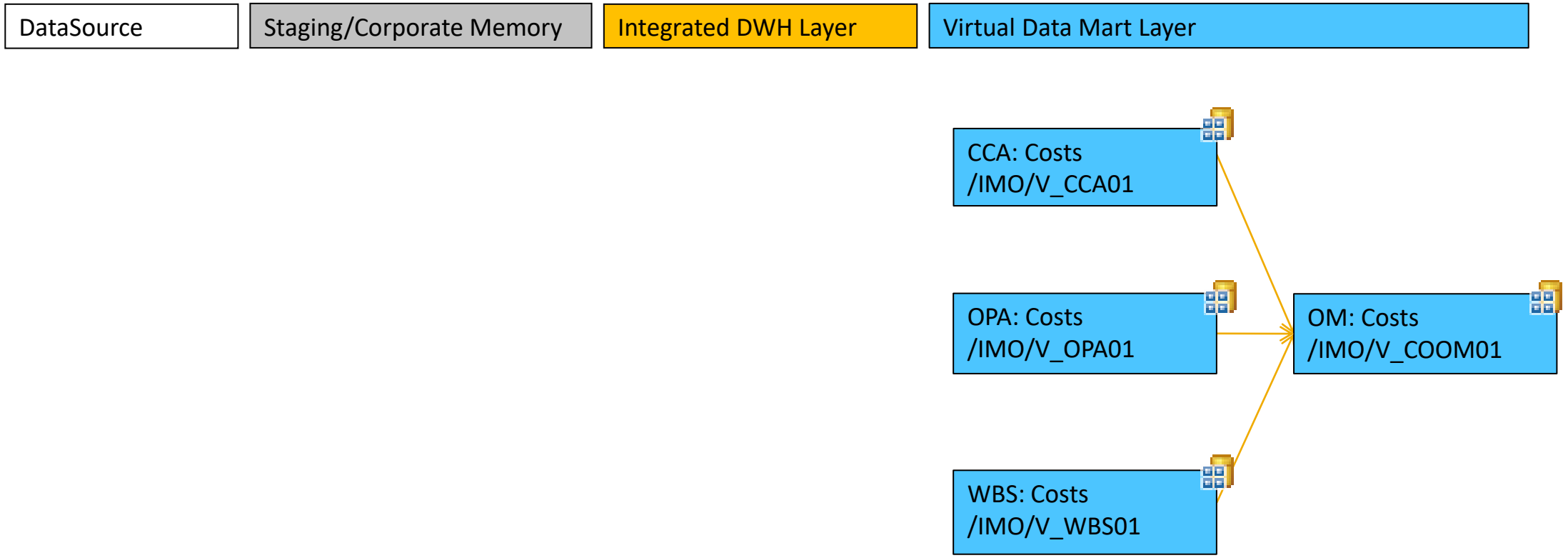

© 2020 SAP SE or an SAP affiliate company. All rights reserved. I PUBLIC

Dataflow Controlling – Cost Centers Accounting (CO-OM-CCA)

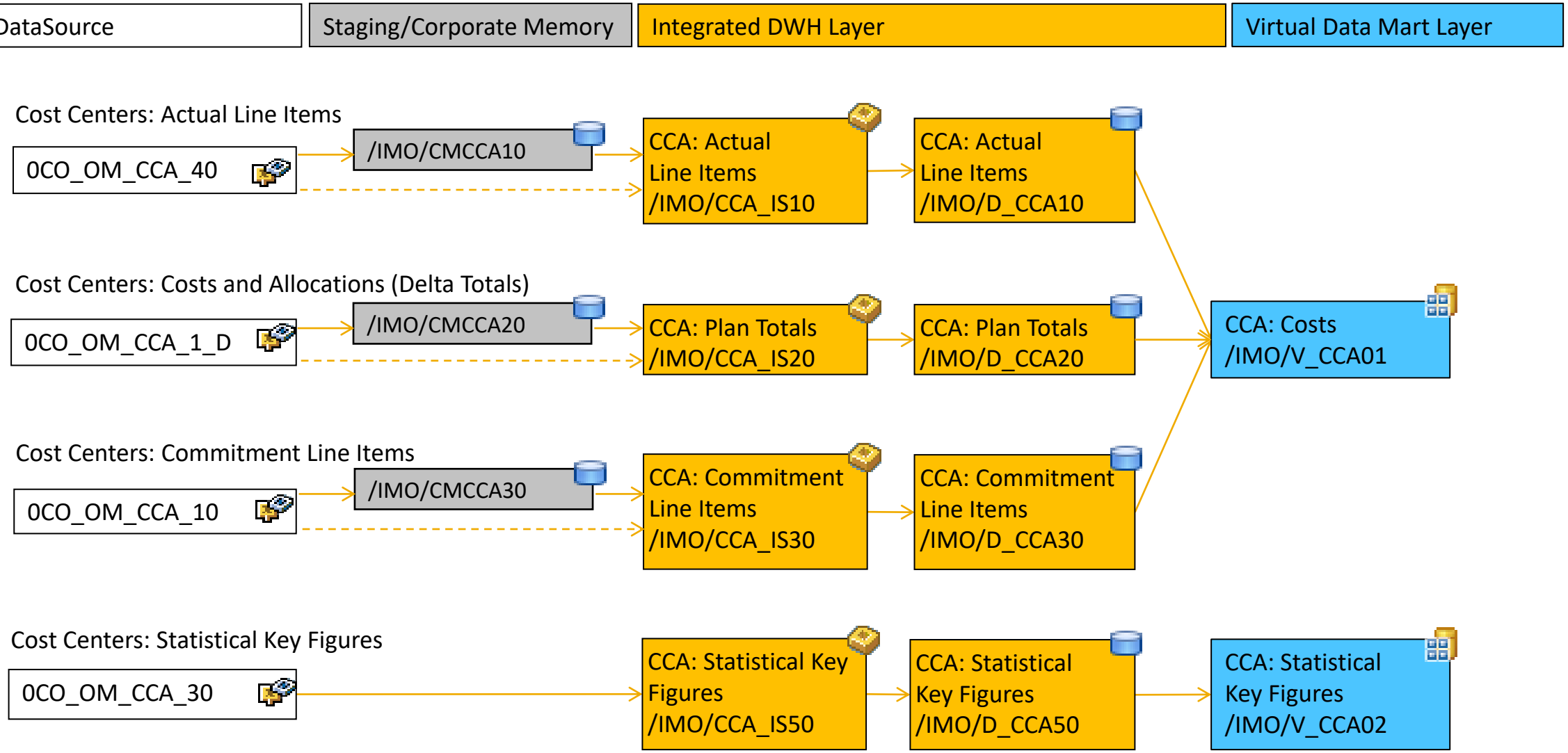

© 2020 SAP SE or an SAP affiliate company. All rights reserved. I PUBLIC

Dataflow Controlling – Overhead Cost Orders (CO-OM-OPA)

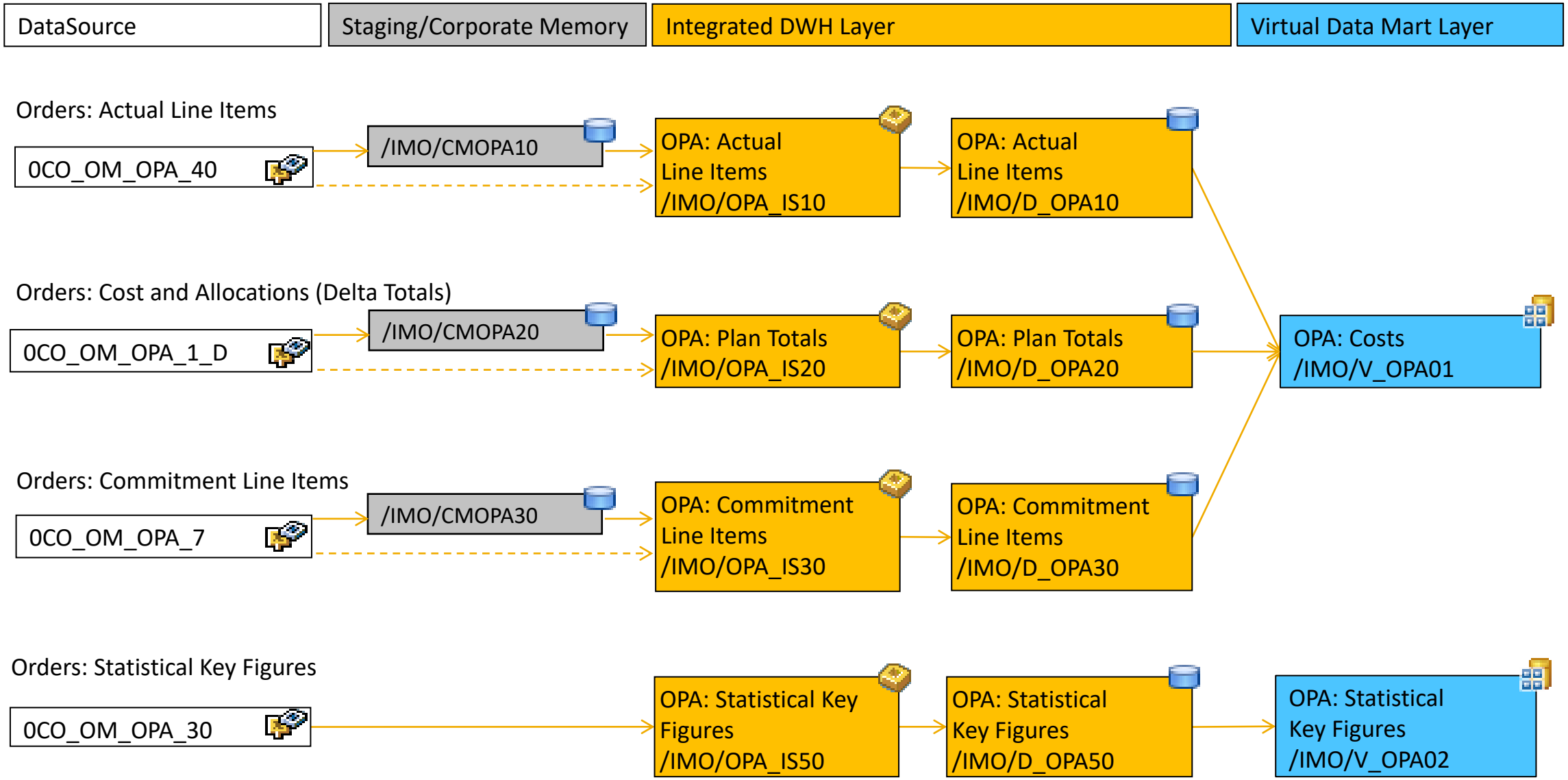

© 2020 SAP SE or an SAP affiliate company. All rights reserved. I PUBLIC

Dataflow Controlling – Overhead Projects (CO-OM-WBS)

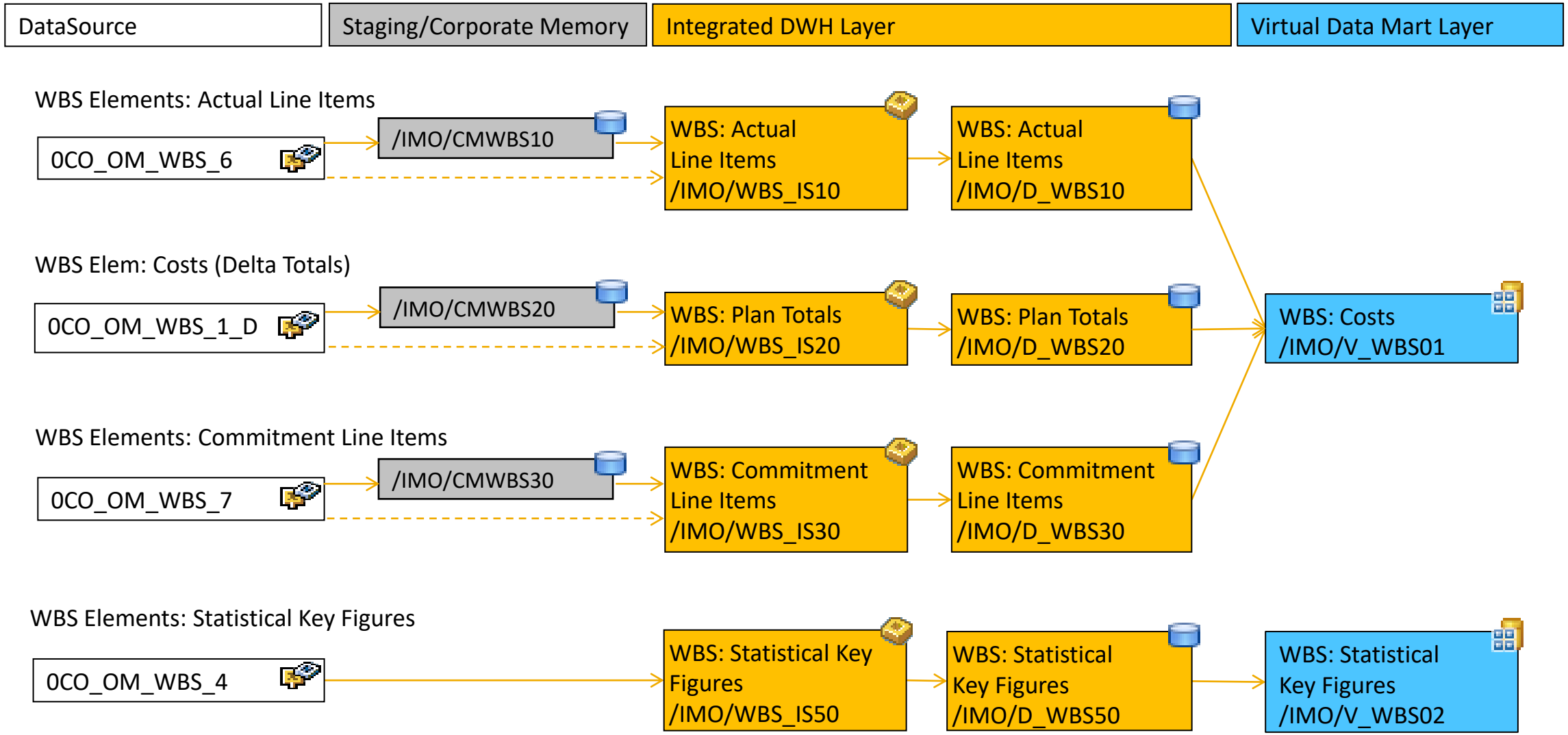

© 2020 SAP SE or an SAP affiliate company. All rights reserved. I PUBLIC

Dataflow Controlling – Project Costs (CO-OM)

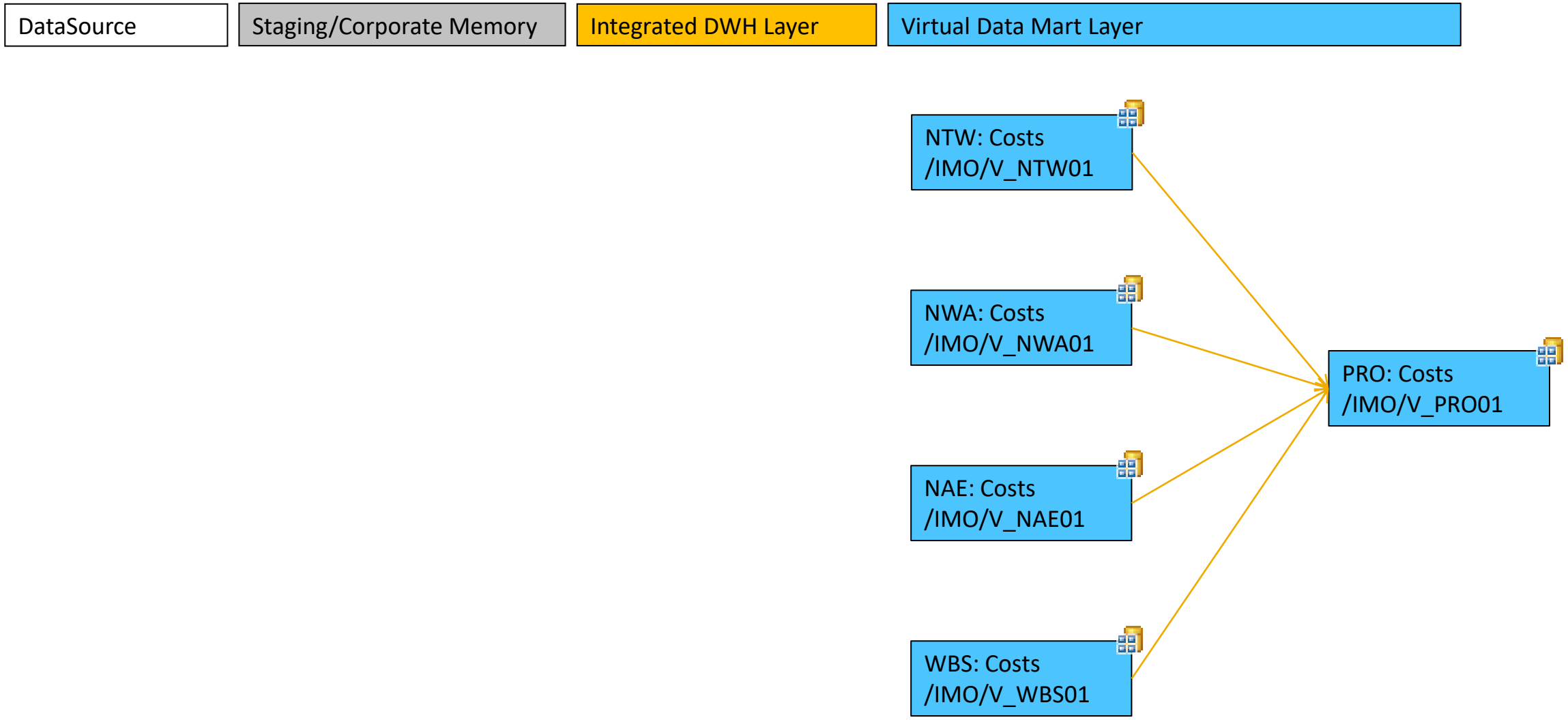

Delivered with BW4CONT 1.0 SP04, BW4CONT 2.0 SP0

© 2020 SAP SE or an SAP affiliate company. All rights reserved. I PUBLIC

Dataflow Controlling – Overhead Projects Network (CO-OM-NTW)

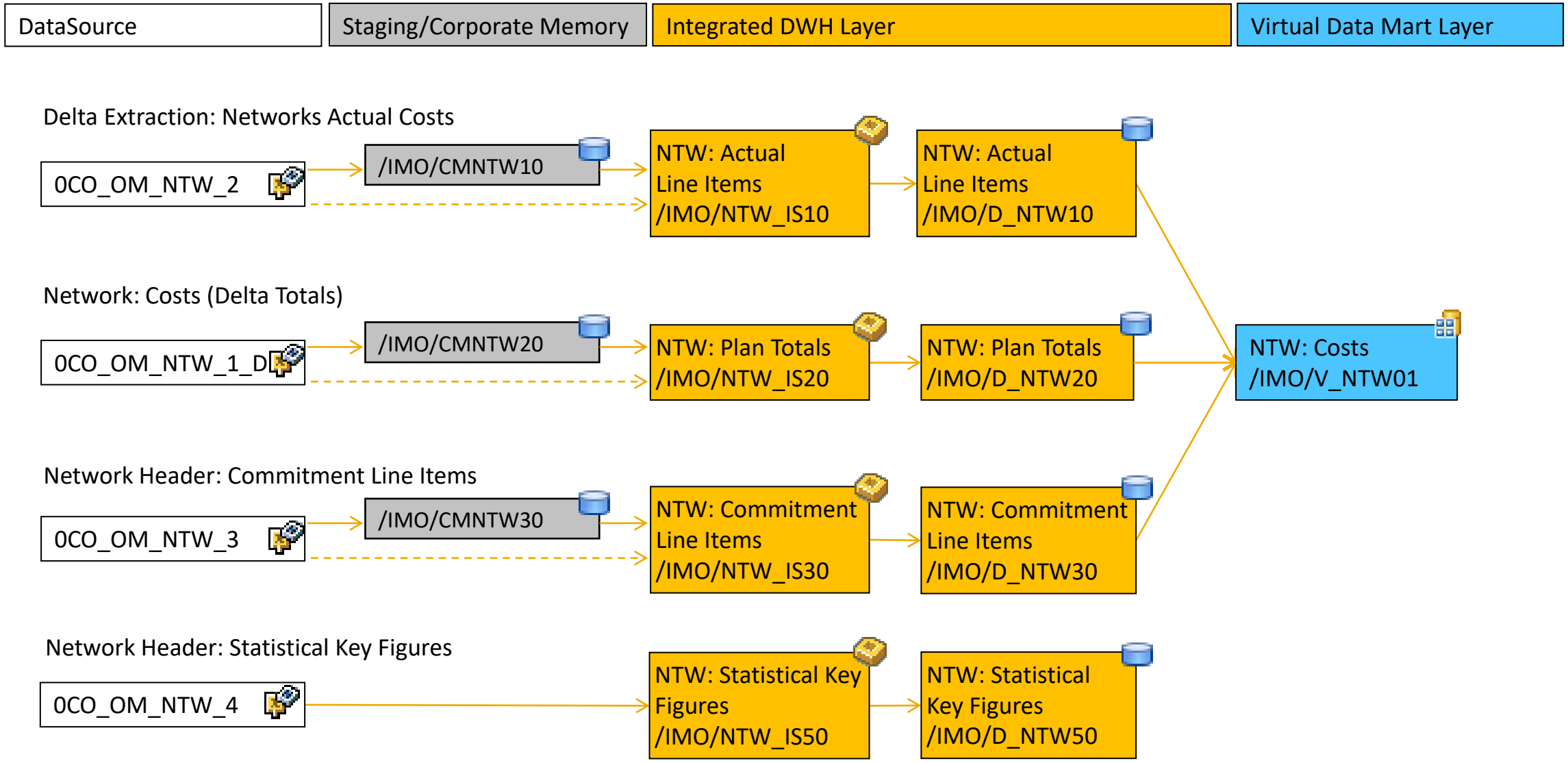

Delivered with BW4CONT 1.0 SP04 , BW4CONT 2.0 SP0

© 2020 SAP SE or an SAP affiliate company. All rights reserved. I PUBLIC

Dataflow Controlling – Overhead Projects Network Activity (CO-OM-NWA)

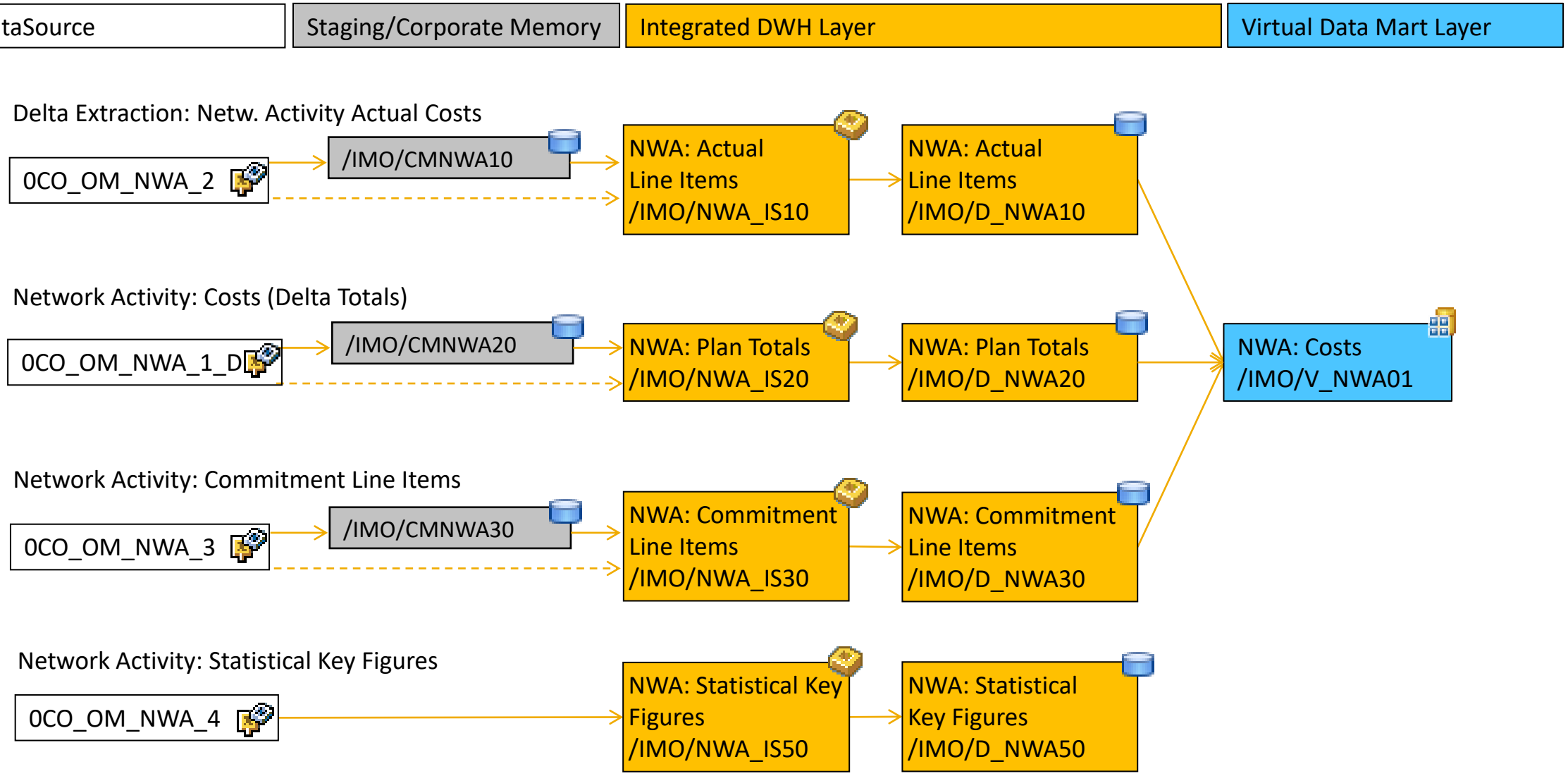

© 2020 SAP SE or an SAP affiliate company. All rights reserved. I PUBLIC

Delivered with BW4CONT 1.0 SP04 , BW4CONT 2.0 SP0

Dataflow Controlling – Overhead Projects Netw Activity Element (CO-OM-NAE)

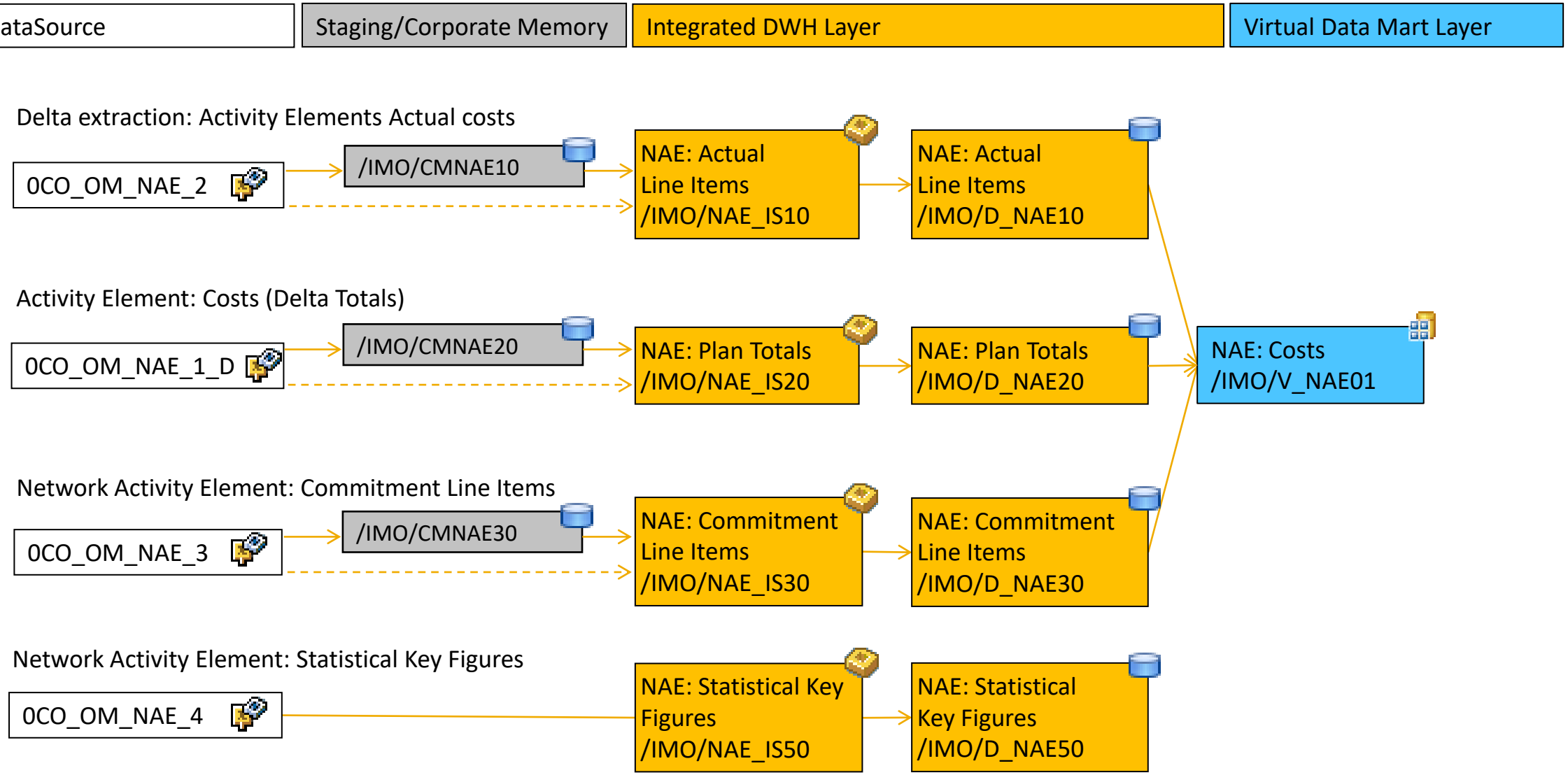

© 2020 SAP SE or an SAP affiliate company. All rights reserved. I PUBLIC

Delivered with BW4CONT 1.0 SP04 , BW4CONT 2.0 SP0

Business Content Controlling – Product Cost Controlling (CO-PC)

Product Cost Controlling

- Product cost analysis including
  - Cost component split
  - Itemization

Delivered with BW4CONT 1.0 SP05, BW4CONT 2.0 SP0

- LSA++ Architecture incl. Staging/Corporate Memory

Documentation

© 2020 SAP SE or an SAP affiliate company. All rights reserved. I PUBLIC

Dataflow Controlling – Product Cost Controlling (CO-PC)

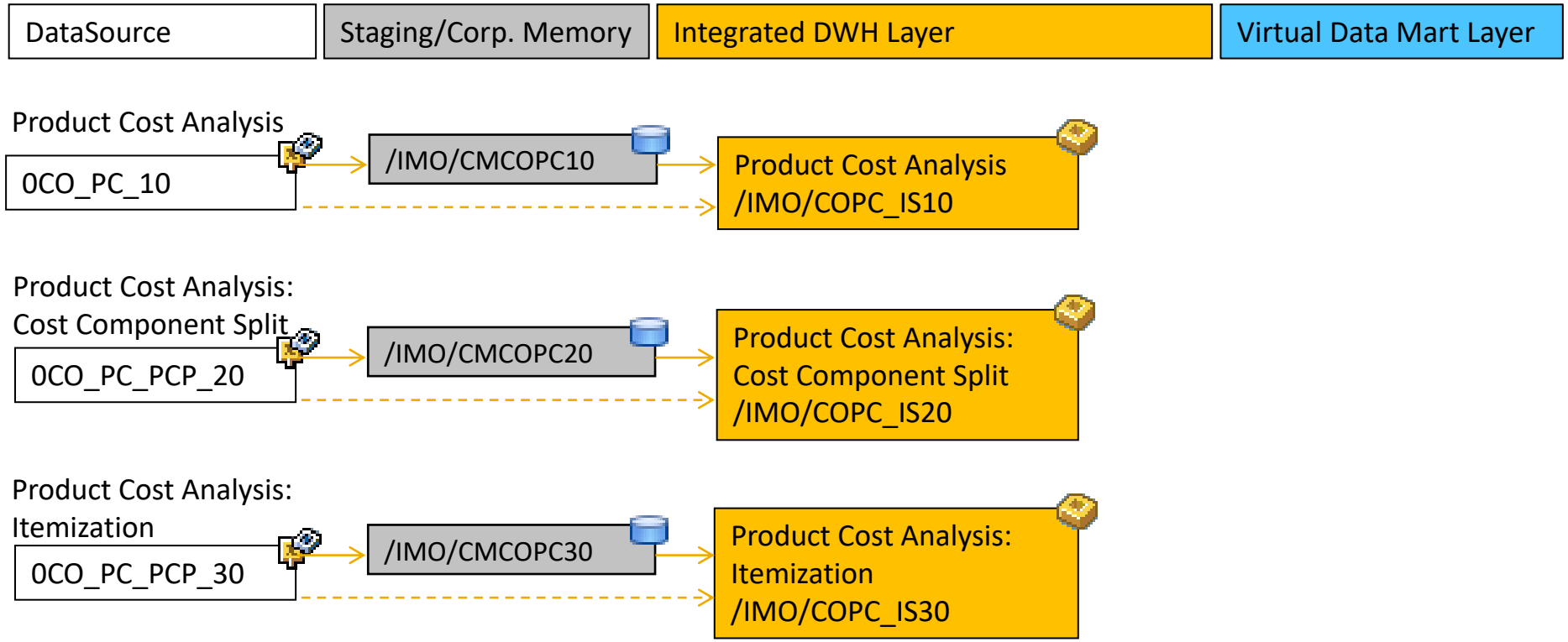

Delivered with BW4CONT 1.0 SP05, BW4CONT 2.0 SP0

© 2020 SAP SE or an SAP affiliate company. All rights reserved. I PUBLIC

Business Content Enterprise Controlling – Profit Center Accounting (EC-PCA)

Enterprise Controlling: Profit Center Accounting

- Profit Center Accounting Overview:
  - Analysis for profit and loss accounts and balance sheet accounts from Profit Center Accounting (PCA),
  - Actual data on aggregated as well as accounting document item level
  - Plan and budget data on aggregated level
  - Statistical key figure data with fix and total quantities
  - Actuals Balance and Flow comparison
  - Actuals/plan/budget: Balance and Flow comparison

- LSA++ Architecture incl. Staging/Corporate Memory
- Usage of DSO (advanced), CompositeProvider
- Virtual Data Mart Layer
- Higher level of detail (down to line item level)

Documentation

© 2020 SAP SE or an SAP affiliate company. All rights reserved. I PUBLIC

Dataflow Enterprise Controlling – Profit Center Accounting (EC-PCA)

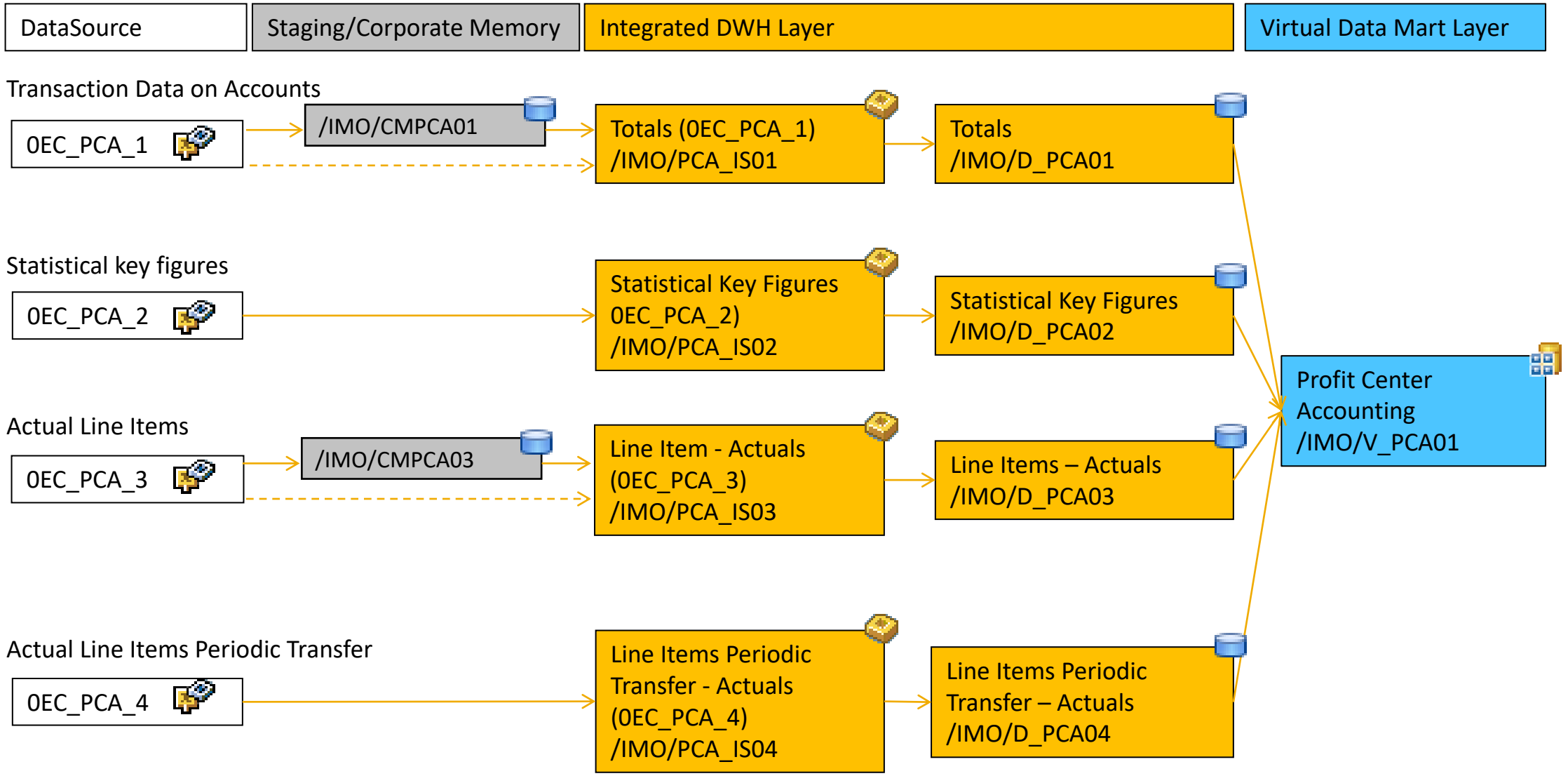

© 2020 SAP SE or an SAP affiliate company. All rights reserved. I PUBLIC

Business Content Real Estate

Real Estate

Transactional Data

- Conditions
- Cash Flow
  - Valuation Cash Flow *
  - Partner Cash Flow
  - Object Cash Flow
- Renewals
- Object Assignments

Master Data

- Contracts
- Master Data Valuation
  - Contract Object
  - Valuation Rules per Contract
  - Valuation Specific Condition Parameters

Delivered with BW4CONT 1.0 SP07 , BW4CONT 2.0 SP0

* Delivered with BW4CONT 1.0 SP09 , BW4CONT 2.0 SP0

- LSA++ Architecture incl. Staging/Corporate Memory
- Usage of DSO (advanced), CompositeProvider
- Virtual Data Mart Layer

Documentation

© 2020 SAP SE or an SAP affiliate company. All rights reserved. I PUBLIC

Dataflow Real Estate Management (RE)

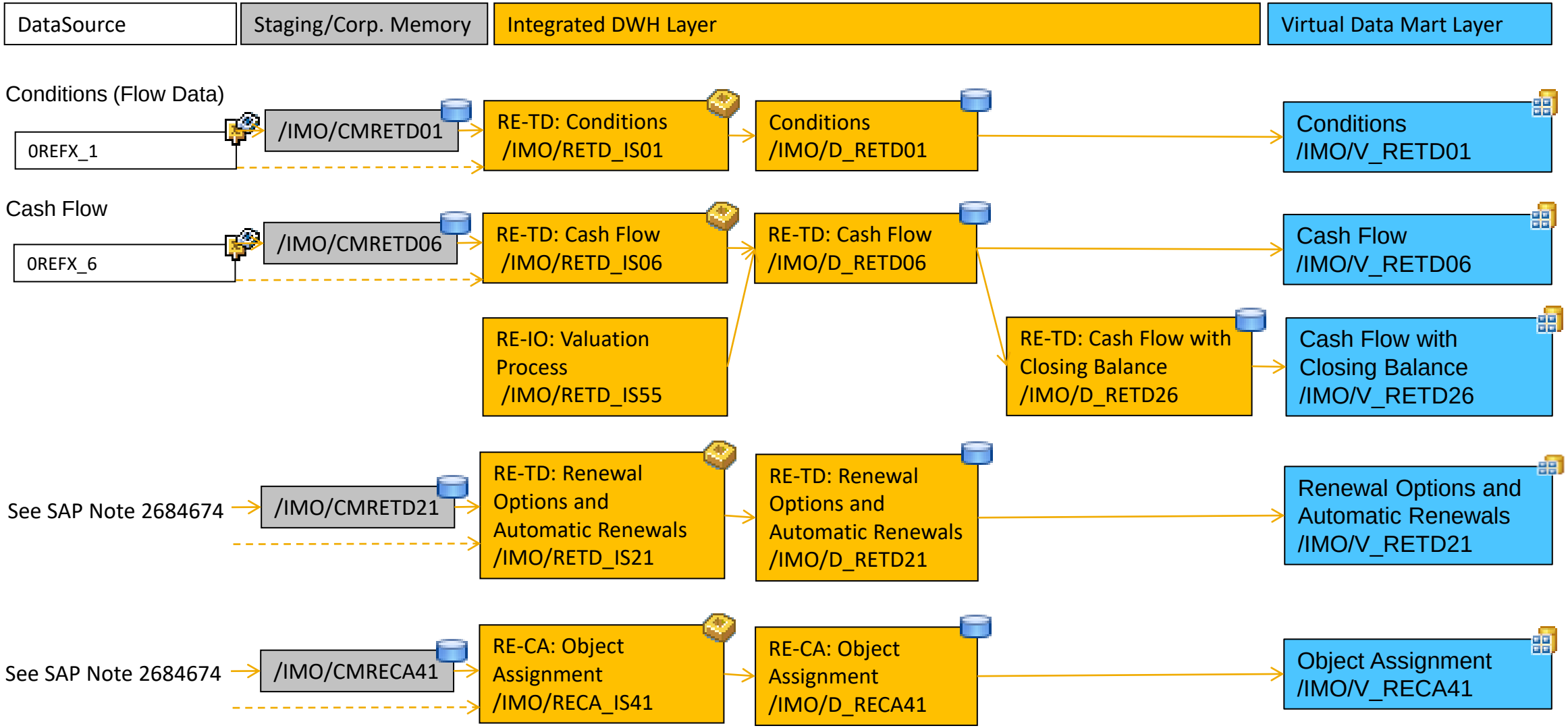

© 2020 SAP SE or an SAP affiliate company. All rights reserved. I PUBLIC

Delivered with BW4CONT 1.0 SP07 , BW4CONT 2.0 SP0

Dataflow Real Estate Management (RE)

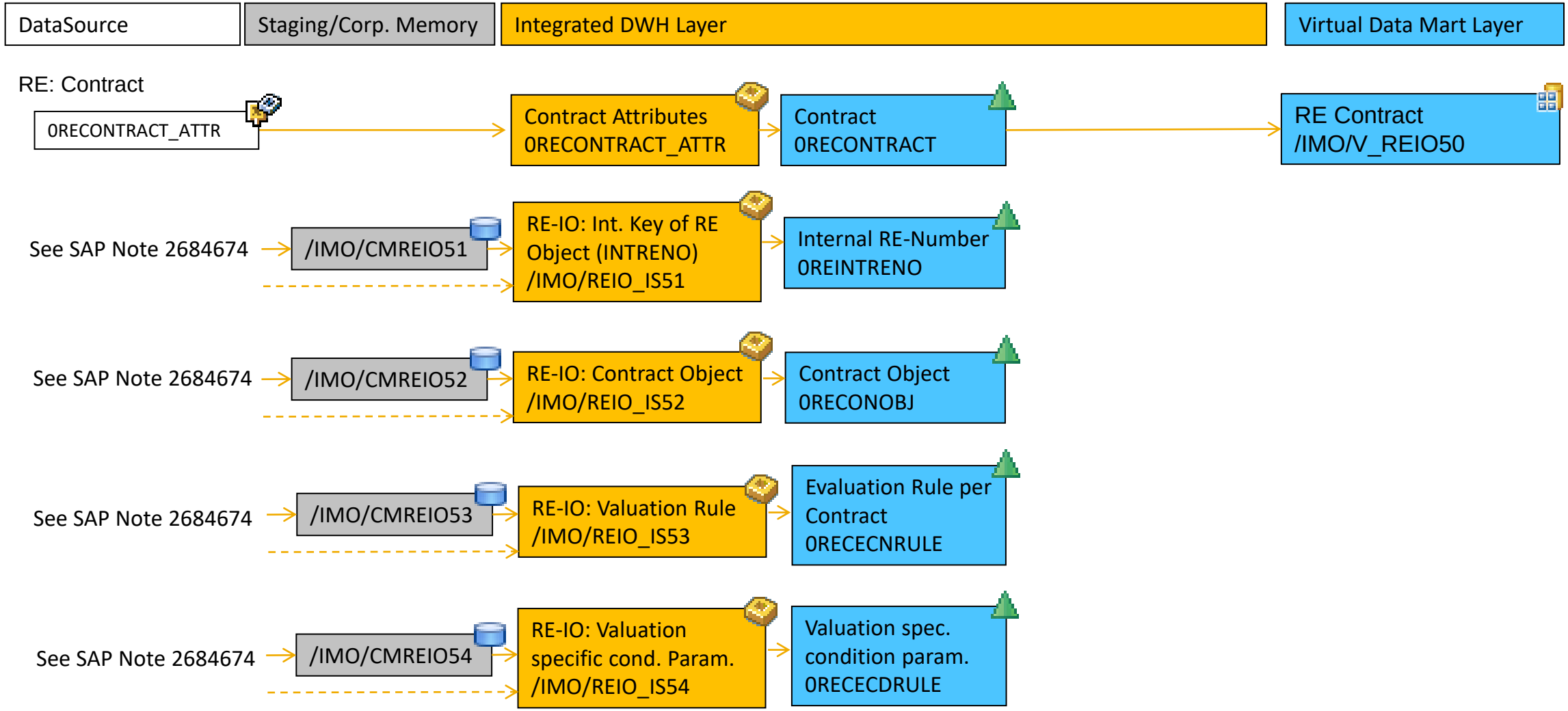

© 2020 SAP SE or an SAP affiliate company. All rights reserved. I PUBLIC

Delivered with BW4CONT SP07, BW4CONT 2.0 SP0

Dataflow Real Estate Management (RE)

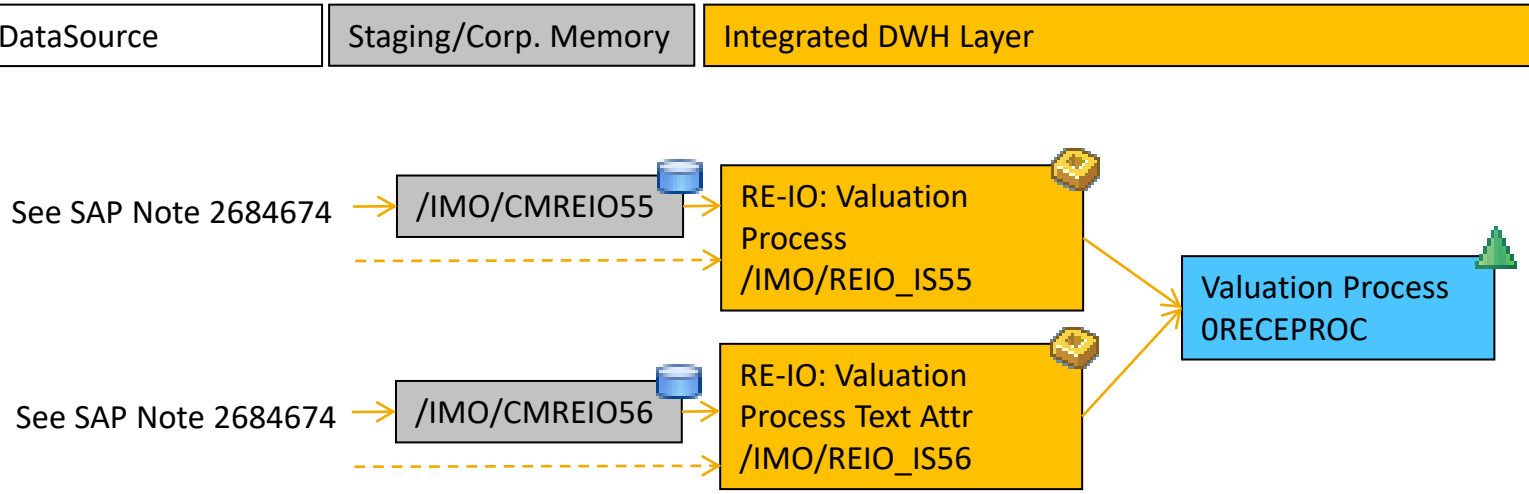

© 2020 SAP SE or an SAP affiliate company. All rights reserved. I PUBLIC

Delivered with BW4CONT 1.0 SP07, BW4CONT 2.0 SP0

Business Content Master Data – Master Data Governance (MDG)

Master Data: Master Data Governance

- Data flow to load key mapping and best record information from SAP MDG into consolidated InfoObjects
  - Customer 0GN_CUSTOM based on customer and business partner
  - Vendor 0GN_VENDOR based on vendor and business partner
  - Product 0PRODUCT based on material
- Allows consolidated reporting across multiple source systems

---

- LSA++ Architecture
- Usage of DSO (advanced)

Documentation

© 2020 SAP SE or an SAP affiliate company. All rights reserved. I PUBLIC

Dataflow Master Data – Master Data Governance (MDG)

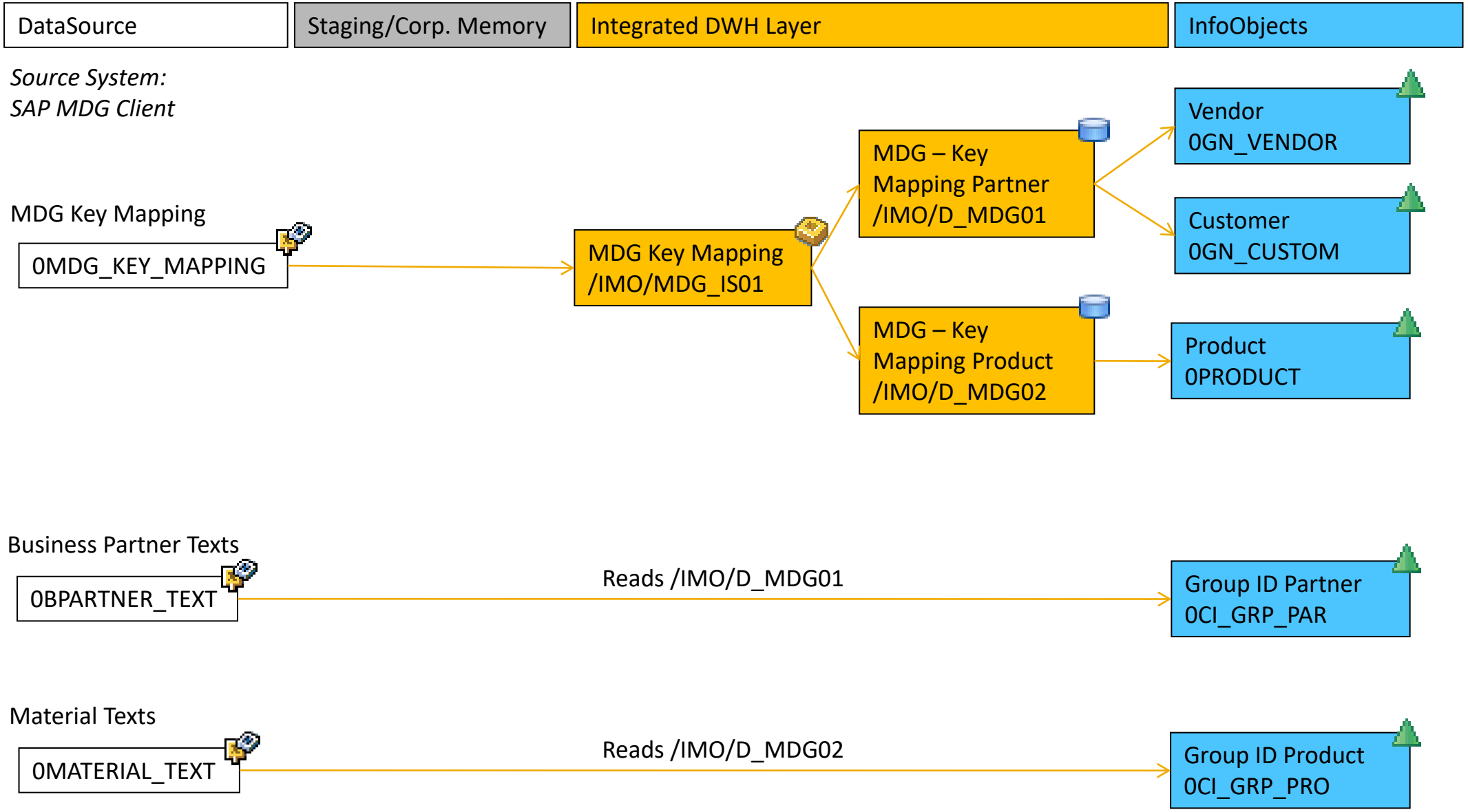

© 2020 SAP SE or an SAP affiliate company. All rights reserved. I PUBLIC

Business Content Utilities

Industry Utilities

Sales Statistics

- Sales Statistics, simulated billings

Energy Data Management

- Meter reading document
- Settlement document
- Usage factors
- Load profile

Master Data

- Contracts, Business Partner,
- Device, Point of Delivery, Register,
- …

- LSA++ Architecture incl. Staging/Corporate Memory
- Usage of DSO (advanced), CompositeProvider
- Virtual Data Mart Layer

Documentation

© 2020 SAP SE or an SAP affiliate company. All rights reserved. I PUBLIC

Dataflow Utilities – Sales Statistics

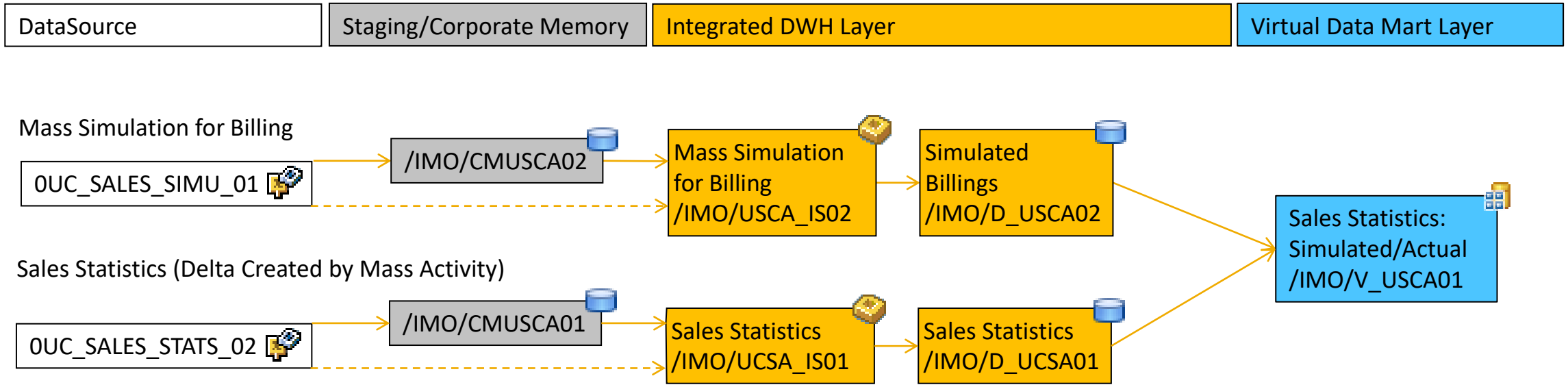

© 2020 SAP SE or an SAP affiliate company. All rights reserved. I PUBLIC

Dataflow Utilities – Energy Data Management

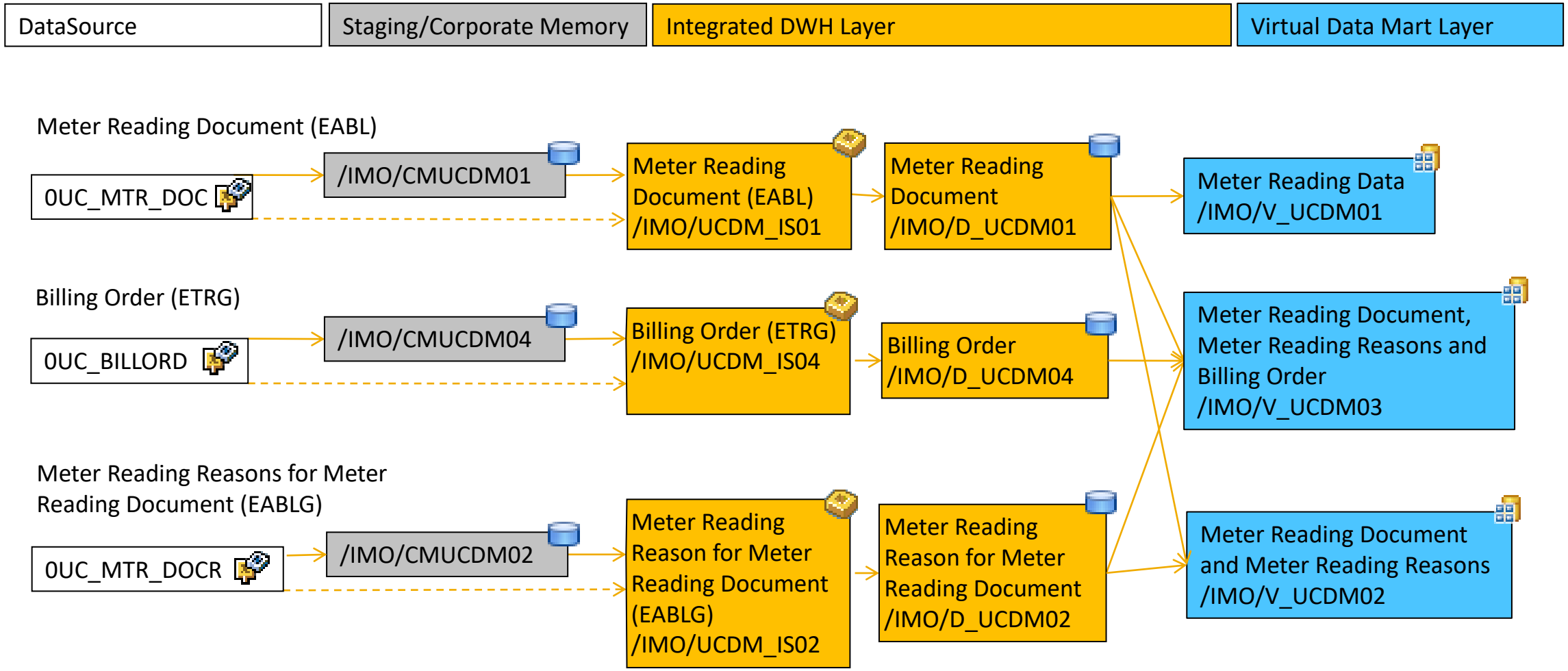

© 2020 SAP SE or an SAP affiliate company. All rights reserved. I PUBLIC

Dataflow Utilities – Energy Data Management

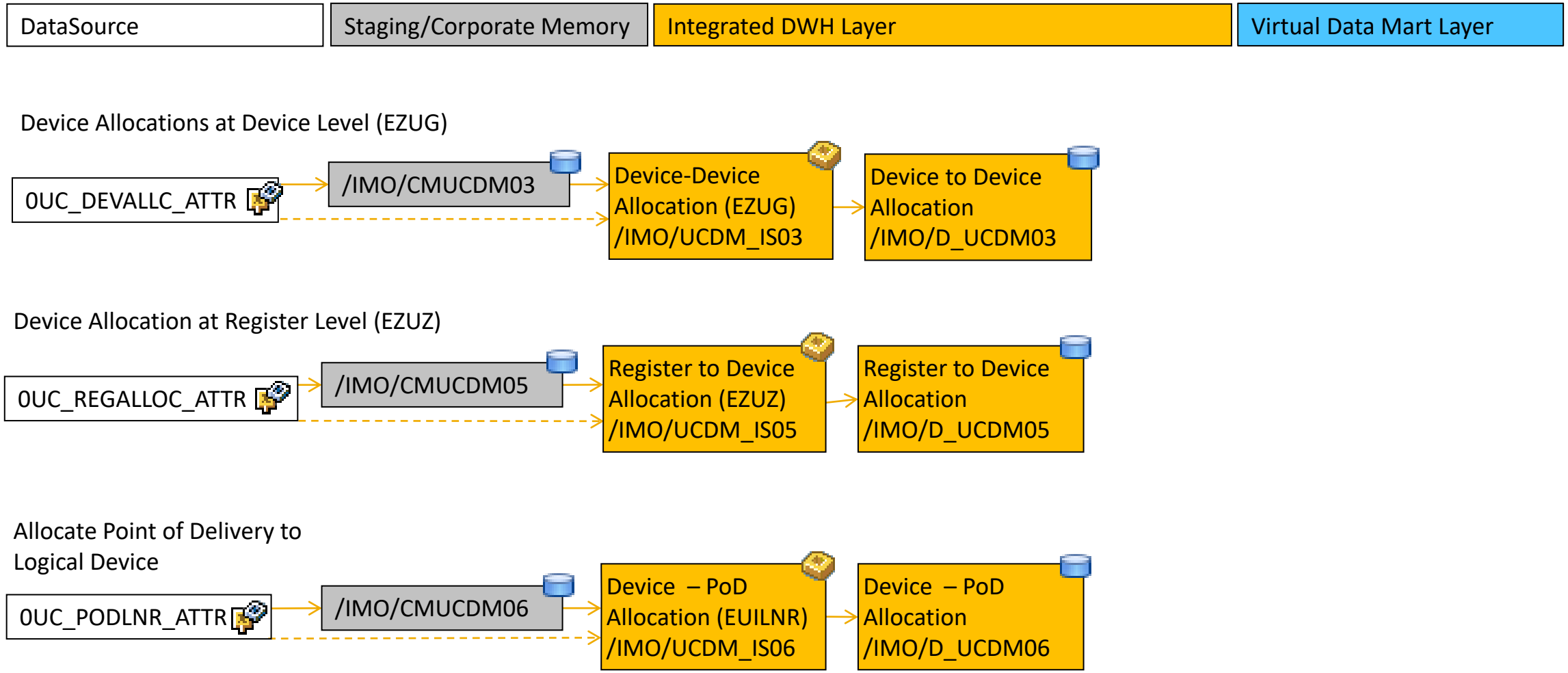

© 2020 SAP SE or an SAP affiliate company. All rights reserved. I PUBLIC

Dataflow Utilities – Energy Data Management

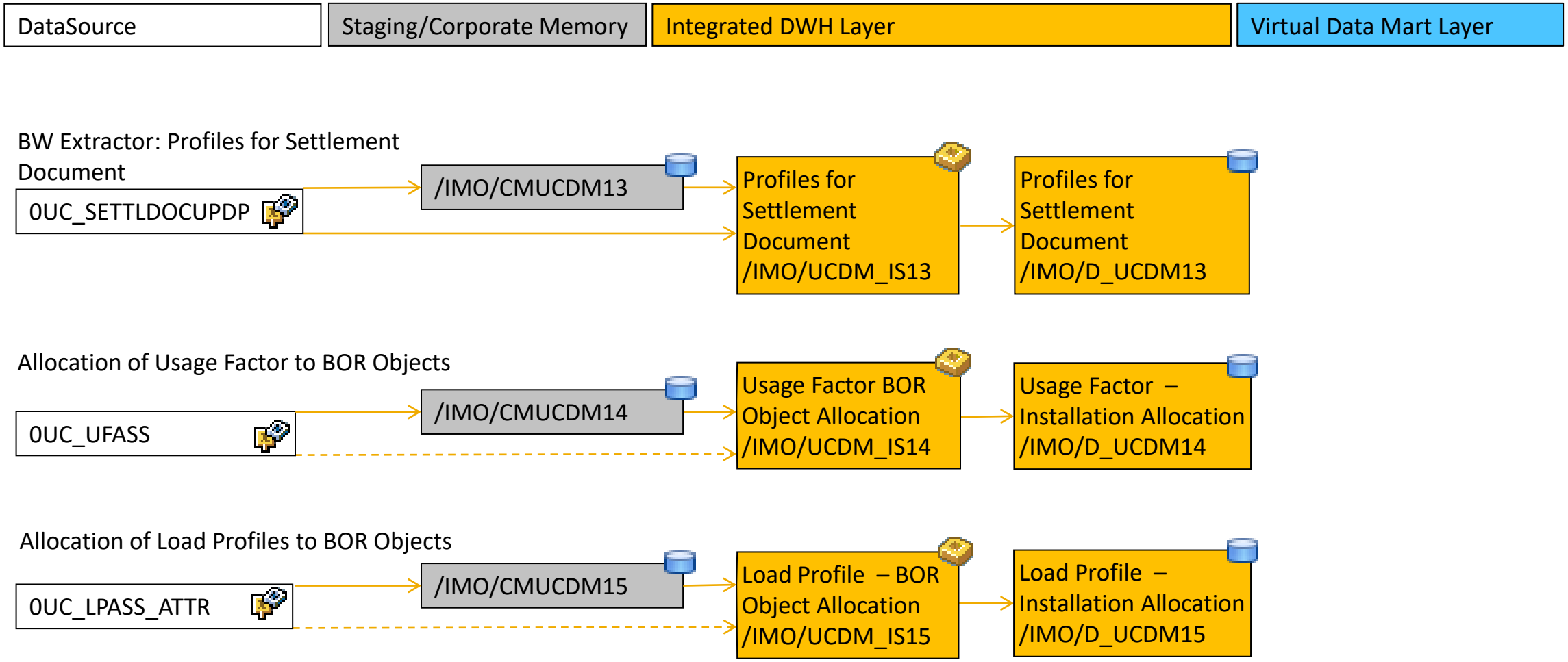

© 2020 SAP SE or an SAP affiliate company. All rights reserved. I PUBLIC

Dataflow Utilities – Energy Data Management

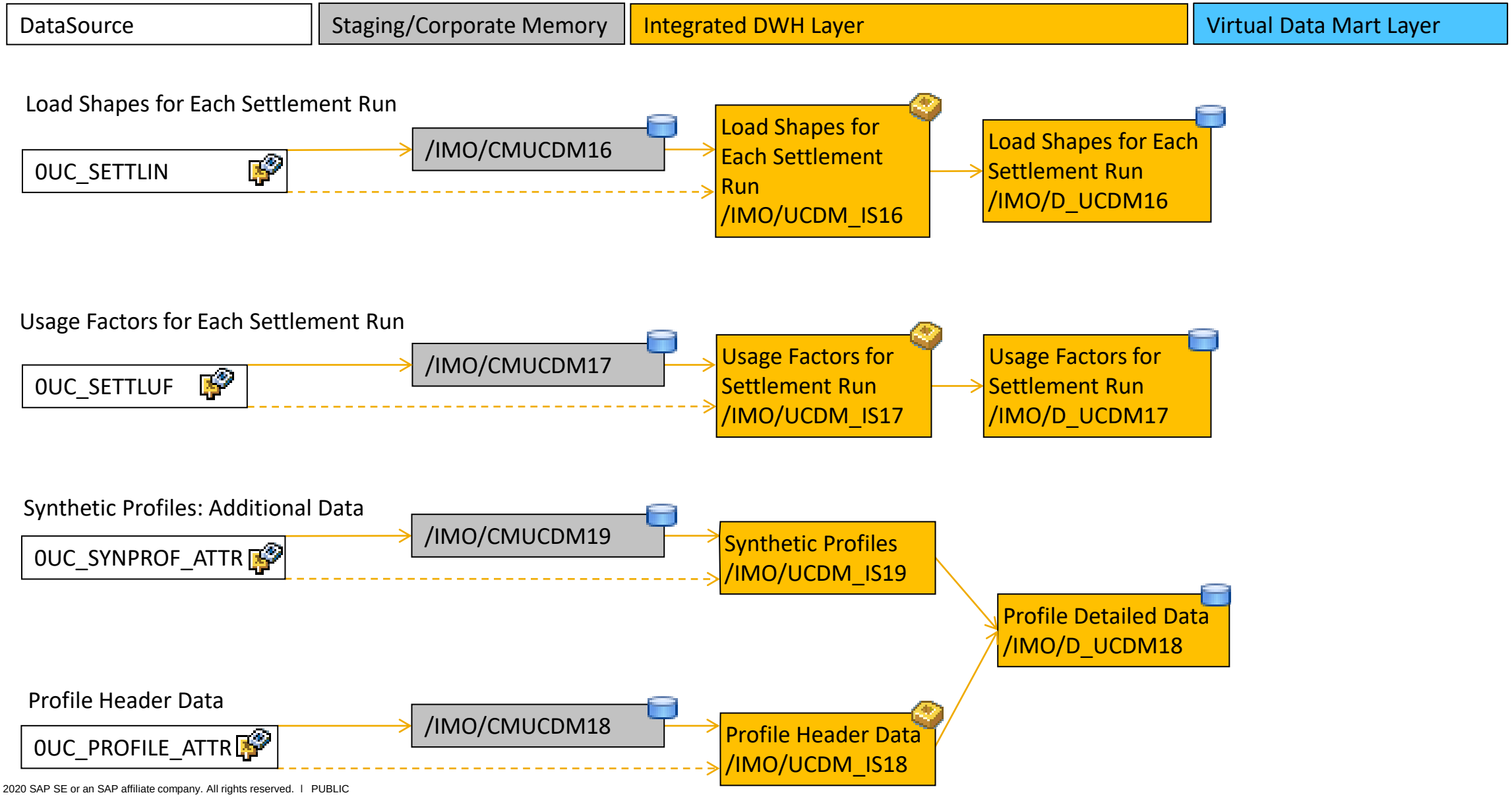

© 2020 SAP SE or an SAP affiliate company. All rights reserved. I PUBLIC

Dataflow Utilities – Master Data

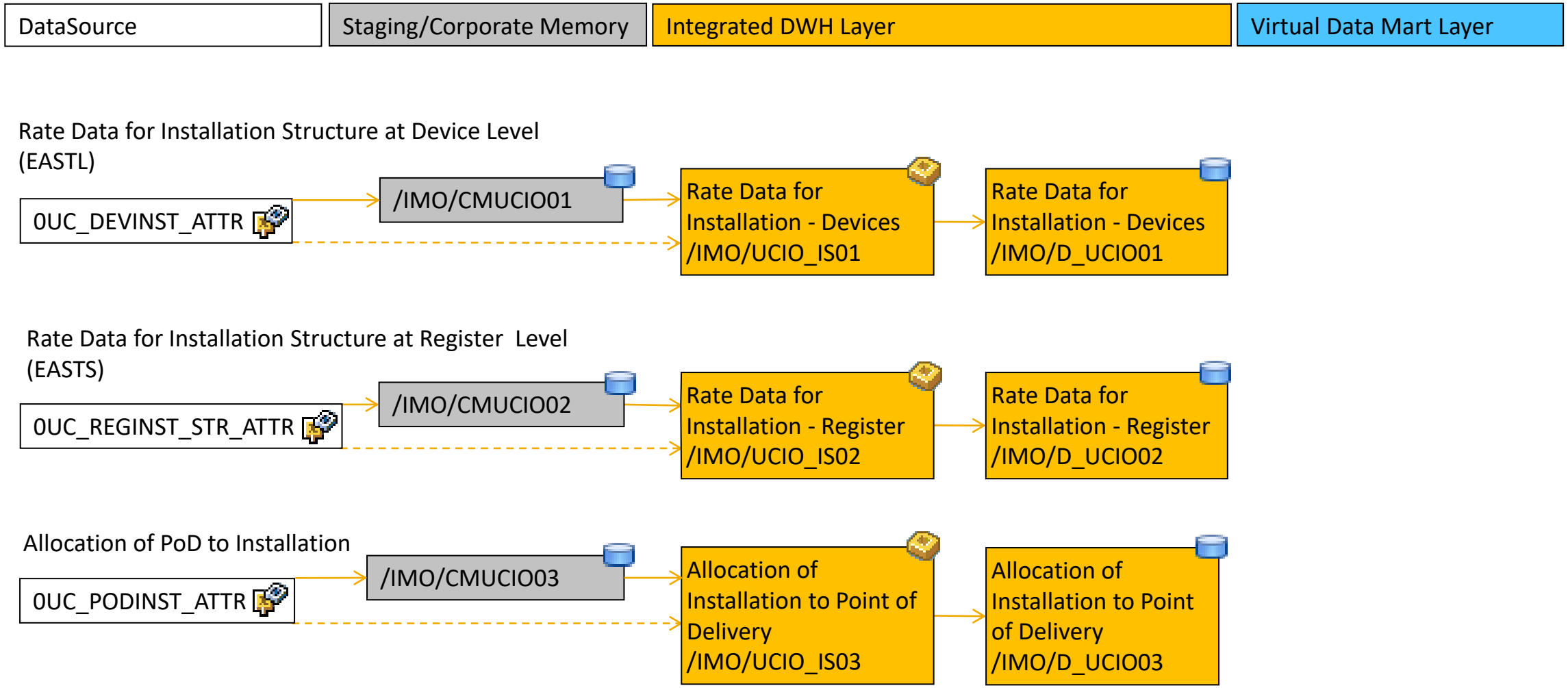

© 2020 SAP SE or an SAP affiliate company. All rights reserved. I PUBLIC

Dataflow Utilities – Master Data

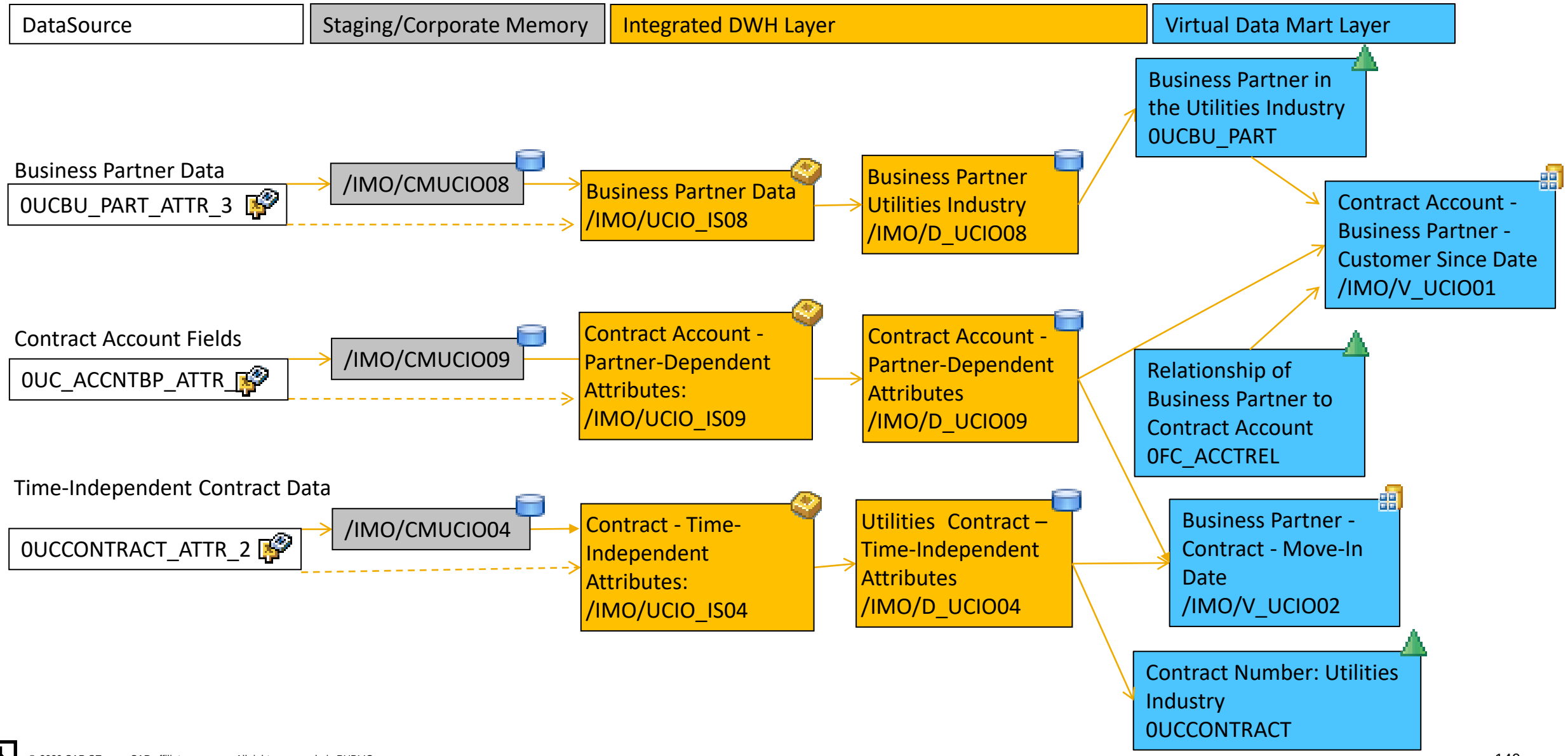

© 2020 SAP SE or an SAP affiliate company. All rights reserved. I PUBLIC

Dataflow Utilities – Master Data

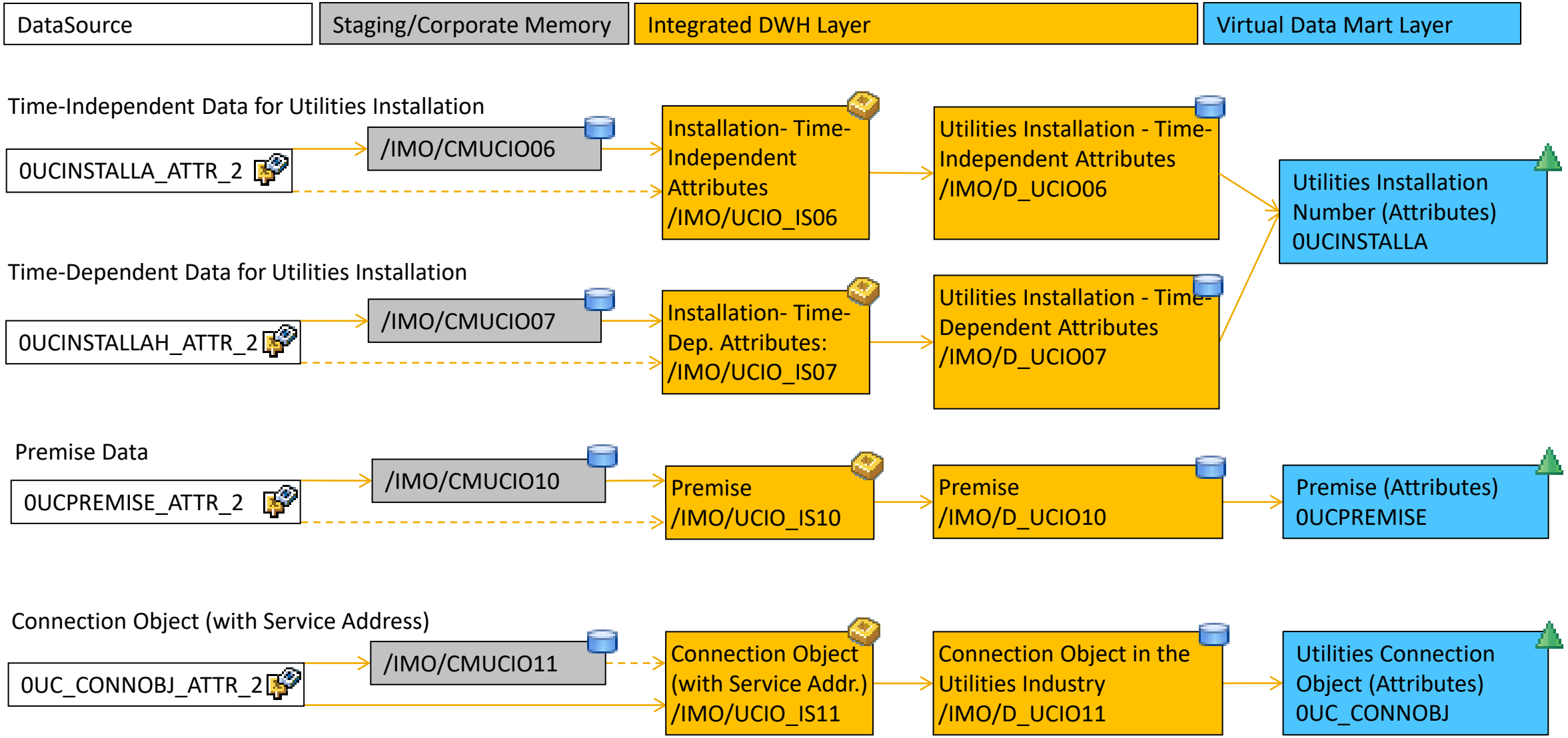

© 2020 SAP SE or an SAP affiliate company. All rights reserved. I PUBLIC

Dataflow Utilities – Master Data

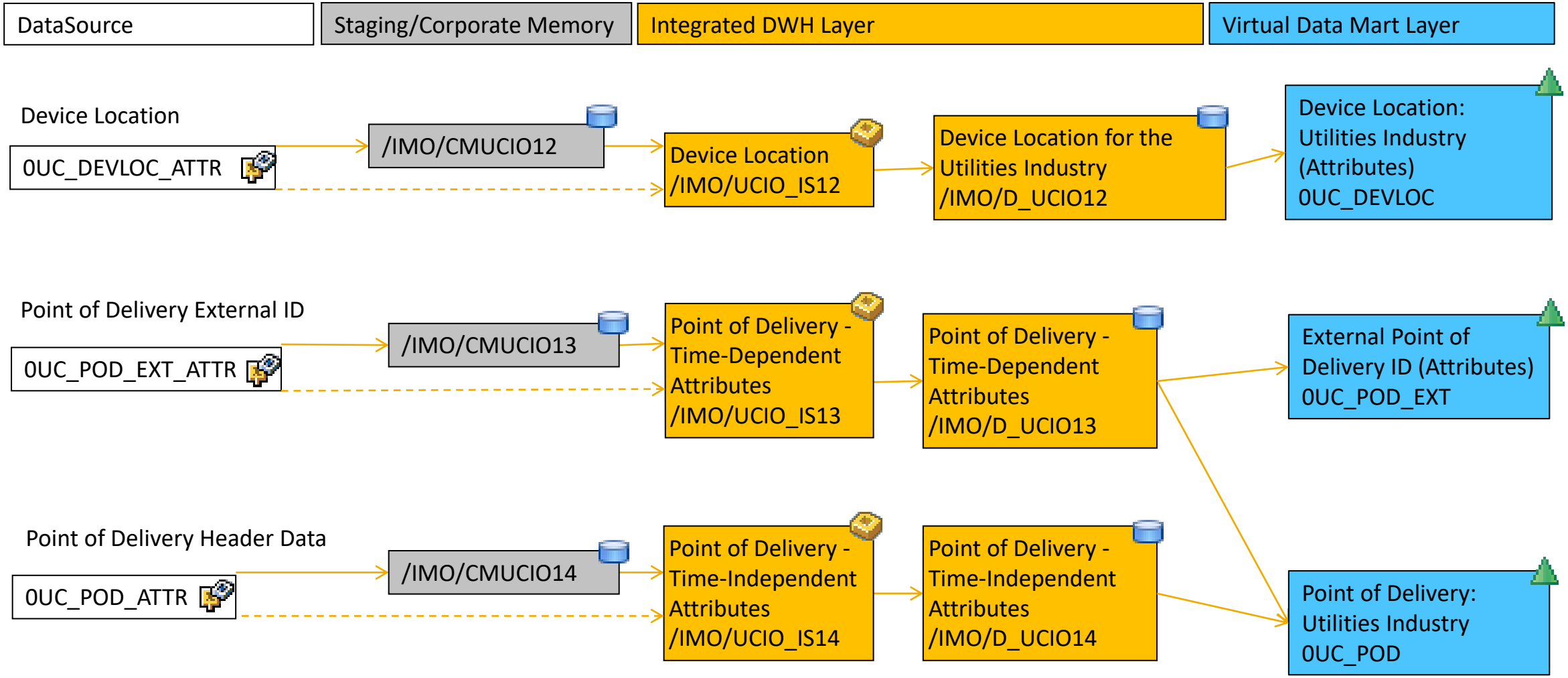

© 2020 SAP SE or an SAP affiliate company. All rights reserved. I PUBLIC

Dataflow Utilities – Master Data

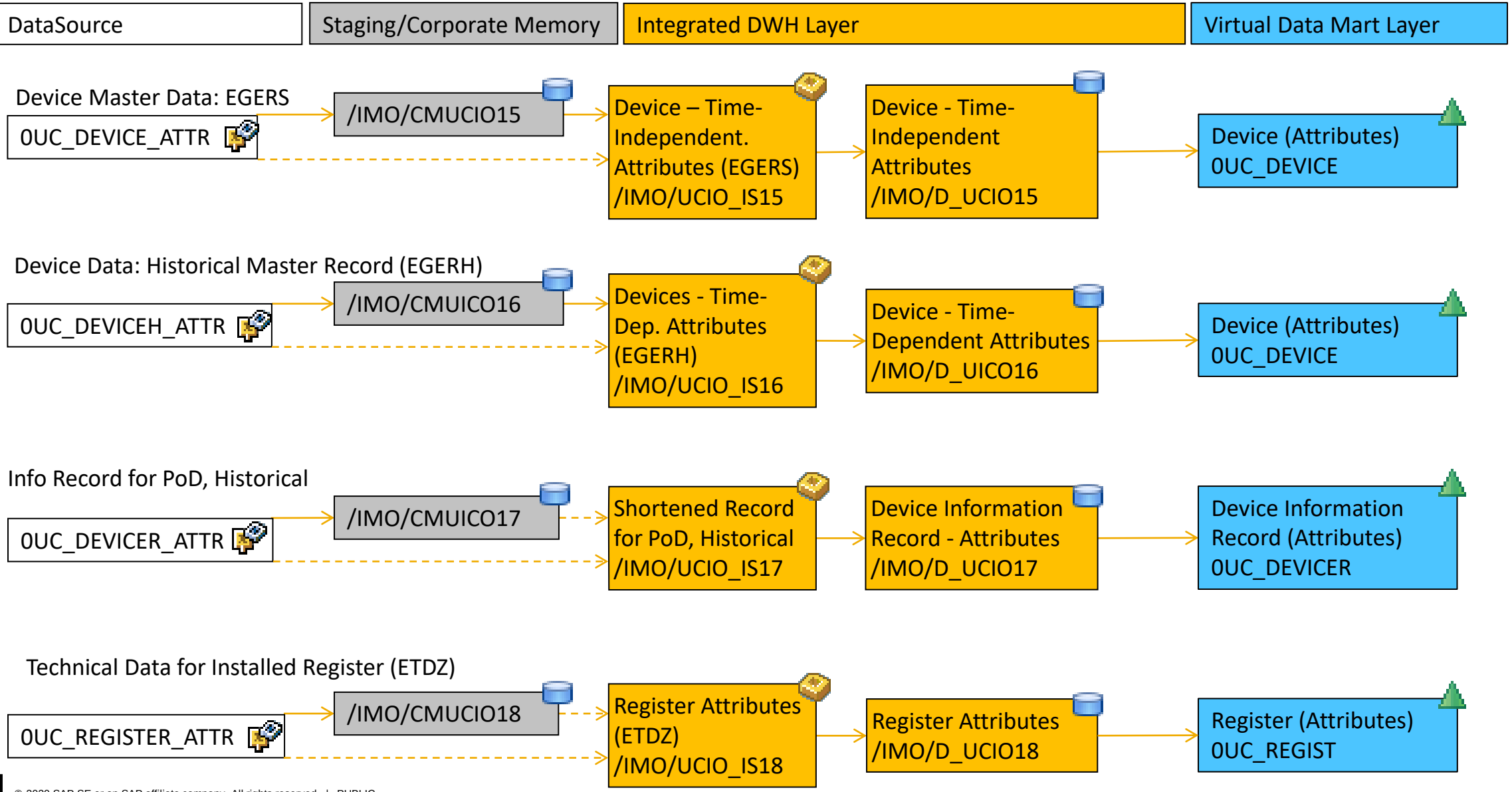

© 2020 SAP SE or an SAP affiliate company. All rights reserved. I PUBLIC

Business Content SuccessFactors – Workforce Management

Workforce Management

Master Data

- Employment History (User ID)
- Person
- Job
- Position

Delivered with BW4CONT 200 SP00

Headcount and Employment Events

- Headcount Reporting
- Employment Event Reporting

Delivered with BW4CONT 200 SP01

- LSA++ Architecture incl. Staging/Corporate Memory
- For data integration, see SAP Note 2776343

Documentation

© 2020 SAP SE or an SAP affiliate company. All rights reserved. I PUBLIC

Dataflow SuccessFactors – Workforce Management Master Data

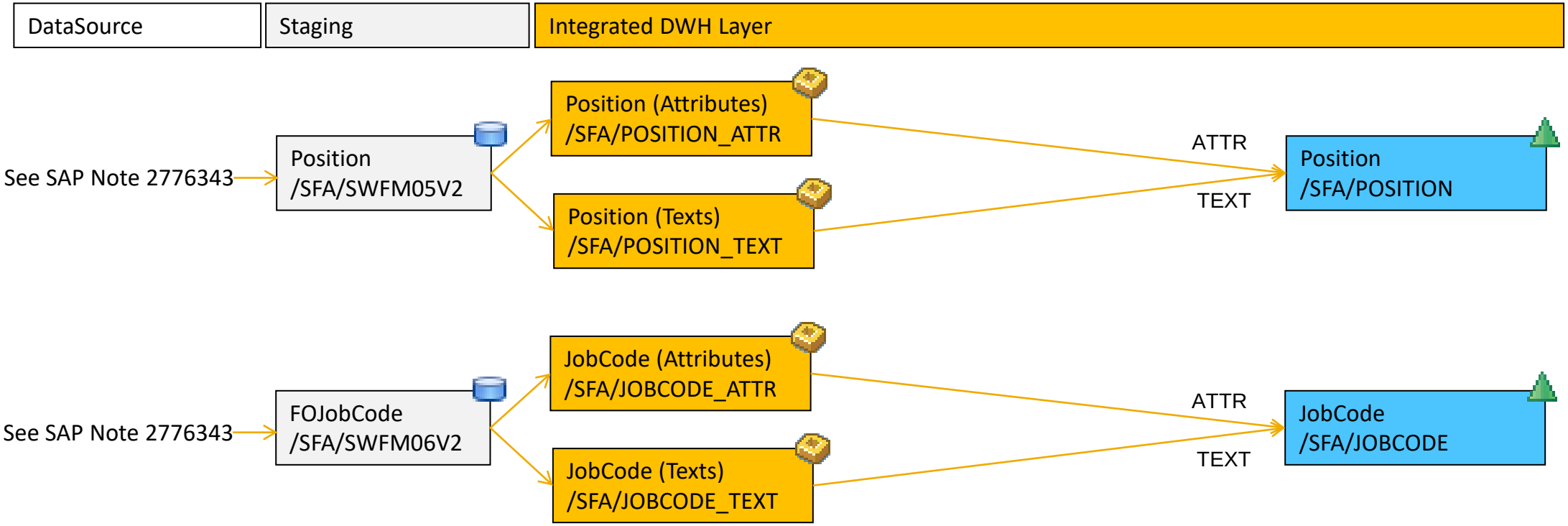

DataFlows for other InfoObjects can be found in the SAP Online Documentation [SuccessFactors – MasterData]

© 2020 SAP SE or an SAP affiliate company. All rights reserved. I PUBLIC

Dataflow SuccessFactors – Workforce Management Master Data

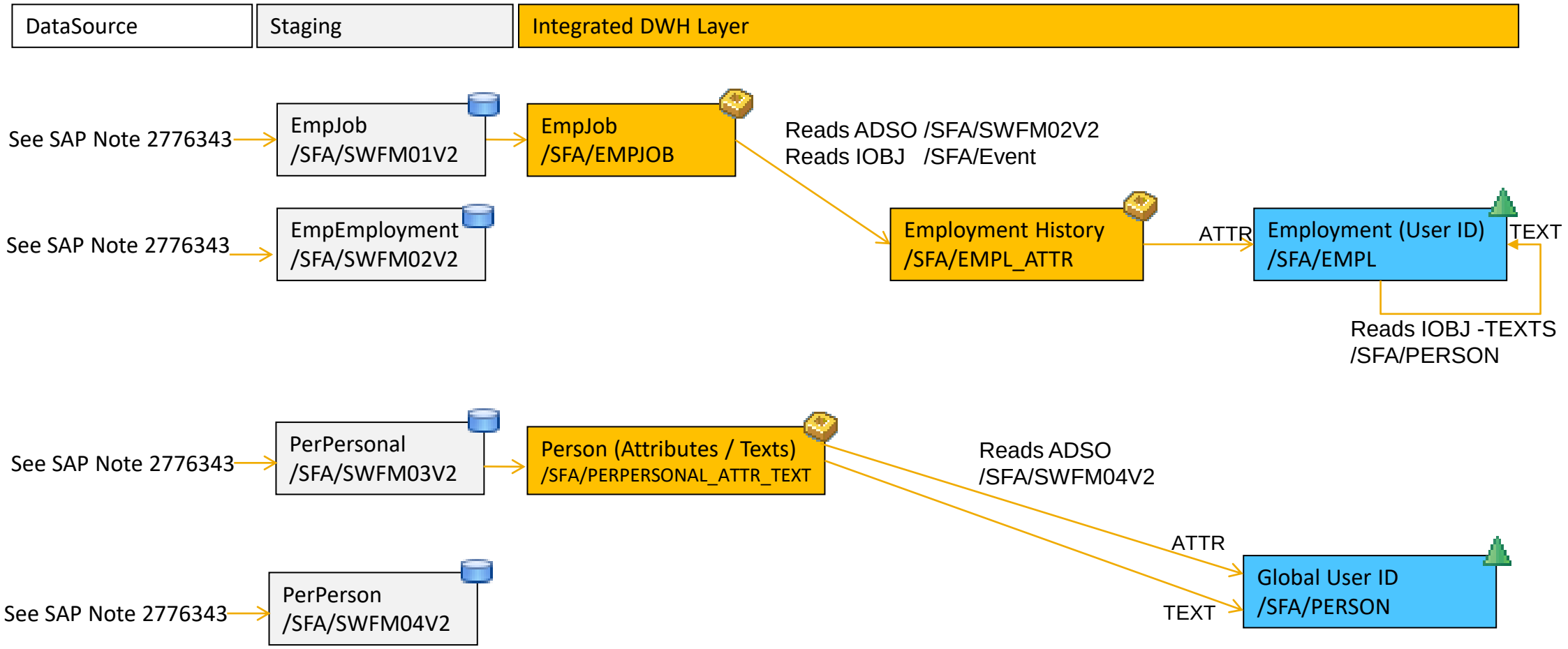

© 2020 SAP SE or an SAP affiliate company. All rights reserved. I PUBLIC

Dataflow SuccessFactors – Workforce Management Headcount and Event

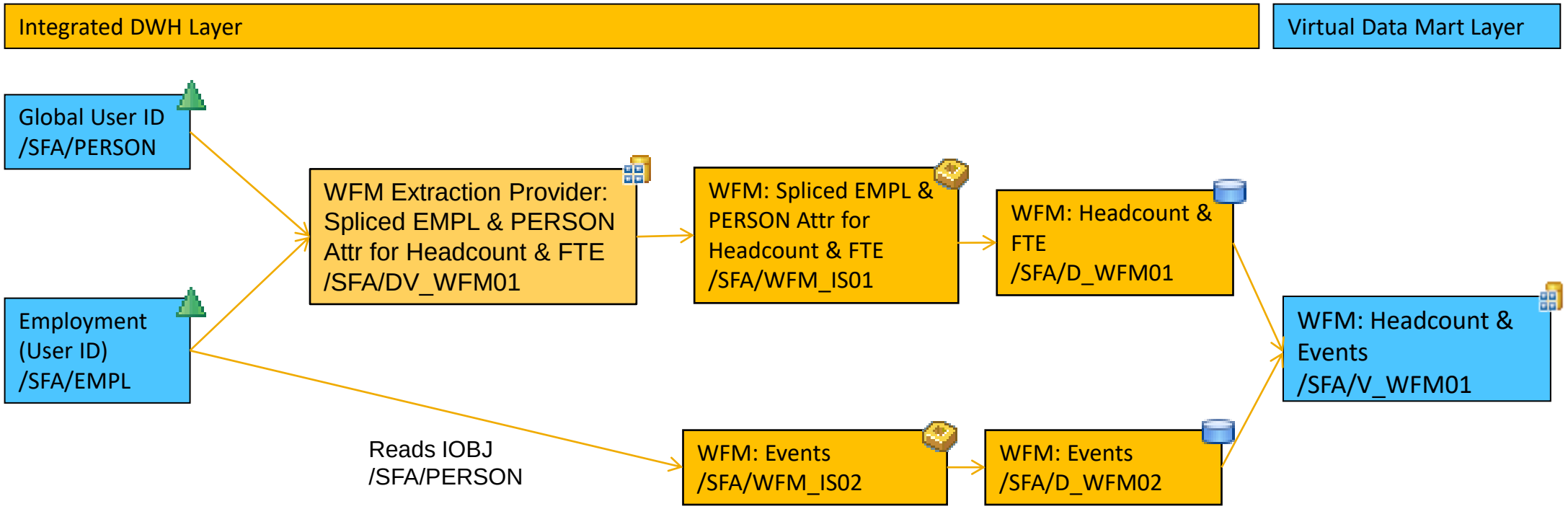

© 2020 SAP SE or an SAP affiliate company. All rights reserved. I PUBLIC

Business Content SuccessFactors – Performance Management

Performance Management

Performance Rating Analysis

- Current Rating
- Previous Rating
- Performance Improvement

Delivered with BW4CONT 200 SP01

- LSA++ Architecture incl. Staging/Corporate Memory
- For data integration, see SAP Note 2776343

Documentation

© 2020 SAP SE or an SAP affiliate company. All rights reserved. I PUBLIC

Dataflow SuccessFactors – Performance Management

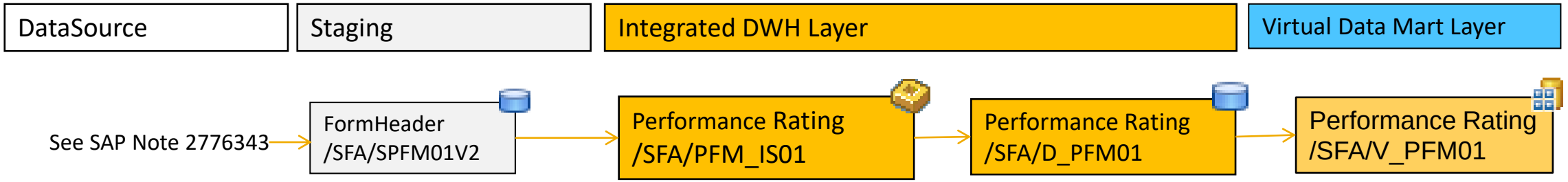

© 2020 SAP SE or an SAP affiliate company. All rights reserved. I PUBLIC

Appendix

SAP BW/4HANA Content Overview 1.0

Business Area

Sales & Distribution
- Sales Overview 8
- Conditions 10
- Delivery Service

Service
- Service Contracts 11
- Service Orders 11
- Service Confirmations 11

Quality Management 4

Asset Management
- Plant Maintenance 1
- Customer Service 2

Finance
- Accounts Receivable
- Accounts Payable
- Fixed Asset Accounting
- Contract Accounts
- General Ledger incl. Financial Statement 2
- Funds Mgmt. 9
- Real Estate 7
- Finance Universal Journal 12

Controlling
- Enterprise Controlling
- Cost Center Accounting
- Overhead Cost Orders
- Overhead Projects incl. Networks 3
- Product Cost Controlling

Supply Chain Management
- Procurement
- Invoice Verification
- Inventory
- Production Planning and Controlling 5
- Extended Warehouse Management 6

Master Data
- Master Data Governance

Industries: Utilities
- Master Data
- Sales Statistics
- Energy Data Management

1 Delivered with BW4CONT 100 SP02, SP03 + SP07

2 Delivered with BW4CONT 100 SP03, Financial Statement analysis delivered with BW4CONT 100 SP03

3 Overhead Controlling for Networks delivered with BW4CONT 100 SP04

4 Delivered with BW4CONT 100 SP04 + SP05

5 Delivered with BW4CONT 100 SP05

6 Delivered with BW4CONT 100 SP05 + SP06

7 Delivered with BW4CONT 100 SP07 + SP09

8 New SD-Billing Content for SAP S/4HANA delivered with BW4CONT 100 SP11, SD-Sales Content for SAP S/4HANA delivered with BW4CONT 100 SP12

9 Public Sector – Funds Management Content delivered with BW4CONT 100 SP12, Retractor SP13

10 New SD Sales and Billing Conditions Content for SAP S/4HANA delivered with BW4CONT 100 SP13

11 Service Content for SAP S/4HANA delivery with BW4CONT 100 SP15 (Orders), SP15 (Confirmations) and SP16 (Contracts)

12 Basis ADSO for SAP S/4HANA Finance Universal Journal delivered with BW4CONT 100 SP16

BW4CONT/B 1.0 >= SP14 requires SAP BW/4HANA 1.0 SP12,
BW4CONT/B 1.0 >= SP05 requires SAP BW/4HANA 1.0 SP07
BW4CONT/B 1.0 <= SP04 requires SAP BW/4HANA 1.0 SP04

© 2020 SAP SE or an SAP affiliate company. All rights reserved. I PUBLIC

SAP BW/4HANA Content Overview 2.0

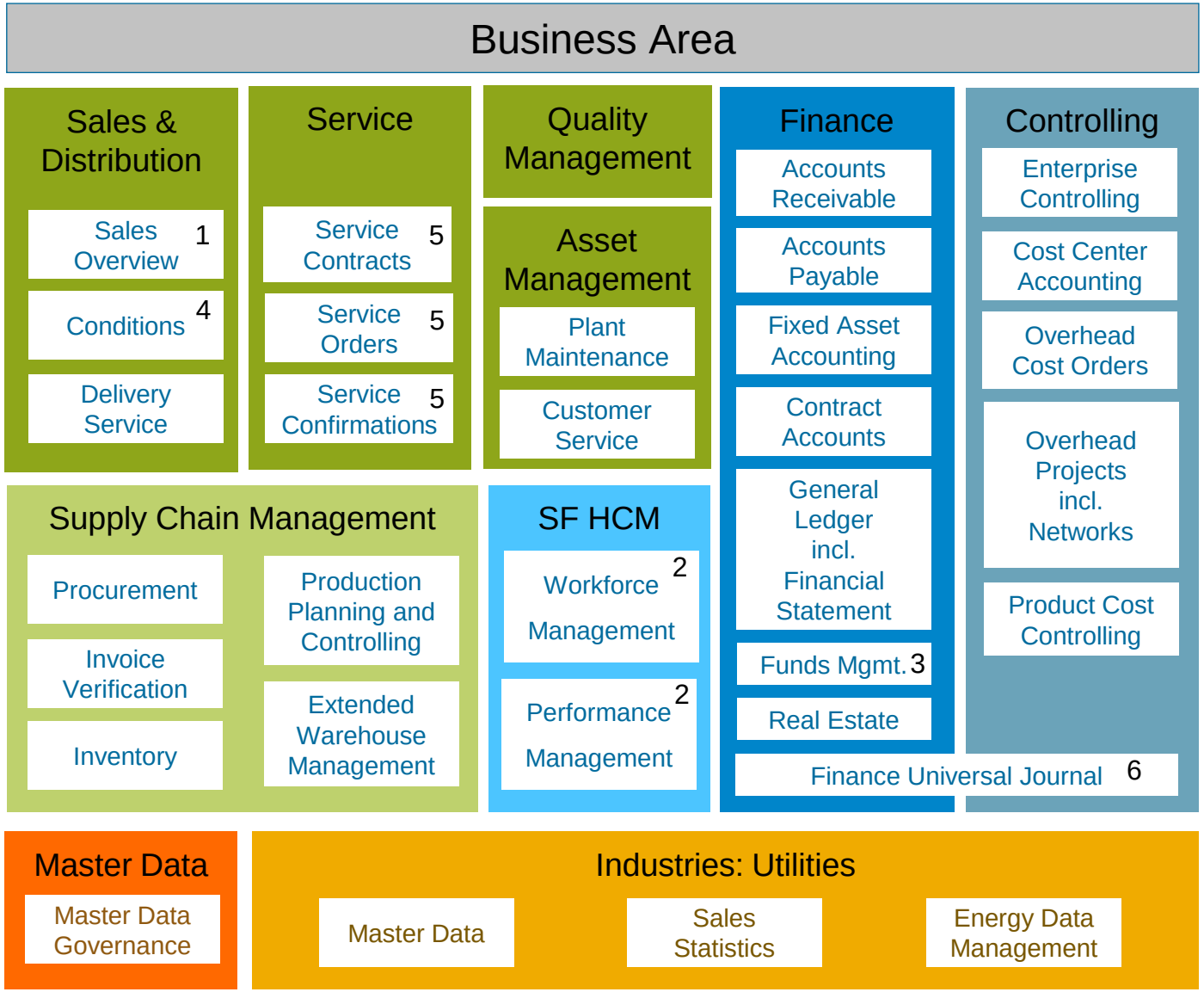

1 New SD-Billing Content for SAP S/4HANA delivered with BW4CONT 200 SP01, SD-Sales Content for SAP S/4HANA with BW4CONT 200 SP02

2 New Performance Management Content for SAP SuccessFactors with BW4CONT 200 SP01

Enhanced Workforce Management Content for SAP SuccessFactors with BW4CONT 200 SP01

3 Public Sector – Funds Management Content with BW4CONT 200 SP02, Retractor delivery with BW4CONT 200 SP03

4 New SD Sales and Billing Conditions Content for SAP S/4HANA delivery with BW4CONT 200 SP03

5 Service Content for SAP S/4HANA delivery with BW4CONT 200 SP04 (Orders), SP05 (Confirmations) and SP06 (Contracts)

6 Basis ADSO for SAP S/4HANA Finance Universal Journal delivered with BW4CONT 200 SP06

BW4CONT/B 2.0 >= SP0 requires SAP BW/4HANA 2.0 SP01

© 2020 SAP SE or an SAP affiliate company. All rights reserved. I PUBLIC

Consolidated InfoObjects used by SAP HANA - optimized Content

Customer 0GN_CUSTOM

Vendor 0GN_VENDOR

Product 0PRODUCT

Sales Category 0GN_CAT_SAL

Purchase Category 0GN_CAT_PUR

Location 0GN_LOCATIO

Source System for Entity 0GN_R3_SSY

© 2020 SAP SE or an SAP affiliate company. All rights reserved. I PUBLIC

Thank you.

Contact information:

Gordon.Witzel@sap.com

Natascha.Marienfeld@sap.com

Benedikt.Michligk@sap.com

THE BEST RUN SAP®

Follow us

www.sap.com/contactsap

© 2020 SAP SE or an SAP affiliate company. All rights reserved.

No part of this publication may be reproduced or transmitted in any form or for any purpose without the express permission of SAP SE or an SAP affiliate company.

The information contained herein may be changed without prior notice. Some software products marketed by SAP SE and its distributors contain proprietary software components of other software vendors. National product specifications may vary.

These materials are provided by SAP SE or an SAP affiliate company for informational purposes only, without representation or warranty of any kind, and SAP or its affiliated companies shall not be liable for errors or omissions with respect to the materials. The only warranties for SAP or SAP affiliate company products and services are those that are set forth in the express warranty statements accompanying such products and services, if any. Nothing herein should be construed as constituting an additional warranty.

In particular, SAP SE or its affiliated companies have no obligation to pursue any course of business outlined in this document or any related presentation, or to develop or release any functionality mentioned therein. This document, or any related presentation, and SAP SE's or its affiliated companies' strategy and possible future developments, products, and/or platforms, directions, and functionality are all subject to change and may be changed by SAP SE or its affiliated companies at any time for any reason without notice. The information in this document is not a commitment, promise, or legal obligation to deliver any material, code, or functionality. All forward-looking statements are subject to various risks and uncertainties that could cause actual results to differ materially from expectations. Readers are cautioned not to place undue reliance on these forward-looking statements, and they should not be relied upon in making purchasing decisions.

SAP and other SAP products and services mentioned herein as well as their respective logos are trademarks or registered trademarks of SAP SE (or an SAP affiliate company) in Germany and other countries. All other product and service names mentioned are the trademarks of their respective companies.

See www.sap.com/copyright for additional trademark information and notices.

THE BEST RUN SAP®

SAP folgen auf

www.sap.com/germany/contactsap

© 2020 SAP SE oder ein SAP-Konzernunternehmen. Alle Rechte vorbehalten.

Weitergabe und Vervielfältigung dieser Publikation oder von Teilen daraus sind, zu welchem Zweck und in welcher Form auch immer, ohne die ausdrückliche schriftliche Genehmigung durch SAP SE oder ein SAP-Konzernunternehmen nicht gestattet.

In dieser Publikation enthaltene Informationen können ohne vorherige Ankündigung geändert werden. Die von SAP SE oder deren Vertriebsfirmen angebotenen Softwareprodukte können Softwarekomponenten auch anderer Softwarehersteller enthalten. Produkte können länderspezifische Unterschiede aufweisen.

Die vorliegenden Unterlagen werden von der SAP SE oder einem SAP-Konzernunternehmen bereitgestellt und dienen ausschließlich zu Informationszwecken. Die SAP SE oder ihre Konzernunternehmen übernehmen keinerlei Haftung oder Gewährleistung für Fehler oder Unvollständigkeiten in dieser Publikation. Die SAP SE oder ein SAP-Konzernunternehmen steht lediglich für Produkte und Dienstleistungen nach der Maßgabe ein, die in der Vereinbarung über die jeweiligen Produkte und Dienstleistungen ausdrücklich geregelt ist. Keine der hierin enthaltenen Informationen ist als zusätzliche Garantie zu interpretieren.

Insbesondere sind die SAP SE oder ihre Konzernunternehmen in keiner Weise verpflichtet, in dieser Publikation oder einer zugehörigen Präsentation dargestellte Geschäftsabläufe zu verfolgen oder hierin wiedergegebene Funktionen zu entwickeln oder zu veröffentlichen. Diese Publikation oder eine zugehörige Präsentation, die Strategie und etwaige künftige Entwicklungen, Produkte und/oder Plattformen der SAP SE oder ihrer Konzernunternehmen können von der SAP SE oder ihren Konzernunternehmen jederzeit und ohne Angabe von Gründen unangekündigt geändert werden. Die in dieser Publikation enthaltenen Informationen stellen keine Zusage, kein Versprechen und keine rechtliche Verpflichtung zur Lieferung von Material, Code oder Funktionen dar. Sämtliche vorausschauenden Aussagen unterliegen unterschiedlichen Risiken und Unsicherheiten, durch die die tatsächlichen Ergebnisse von den Erwartungen abweichen können. Dem Leser wird empfohlen, diesen vorausschauenden Aussagen kein übertriebenes Vertrauen zu schenken und sich bei Kaufentscheidungen nicht auf sie zu stützen.

SAP und andere in diesem Dokument erwähnte Produkte und Dienstleistungen von SAP sowie die dazugehörigen Logos sind Marken oder eingetragene Marken der SAP SE (oder von einem SAP-Konzernunternehmen) in Deutschland und verschiedenen anderen Ländern weltweit. Alle anderen Namen von Produkten und Dienstleistungen sind Marken der jeweiligen Firmen.

Zusätzliche Informationen zur Marke und Vermerke finden Sie auf der Seite www.sap.com/corporate/de/legal/copyright.html.

THE BEST RUN SAP