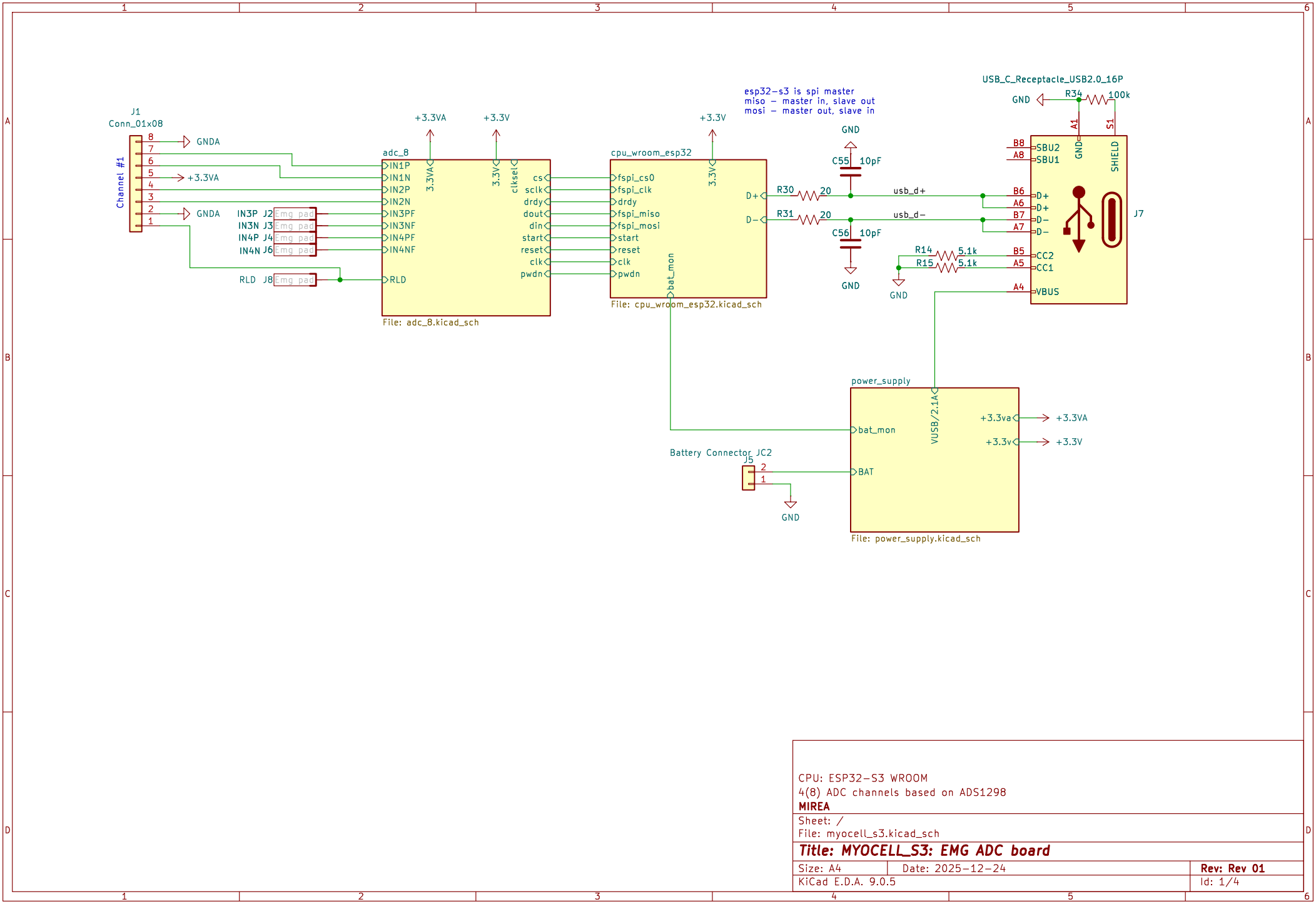

CPU: ESP32−S3 WROOM
4(8) ADC channels based on ADS1298
MIREA

Sheet: /
File: myocell_s3.kicad_sch

Title: MYOCELL_S3: EMG ADC board

Size: A4	Date: 2025−12−24	**Rev: Rev 01**
KiCad E.D.A. 9.0.5		Id: 1/4

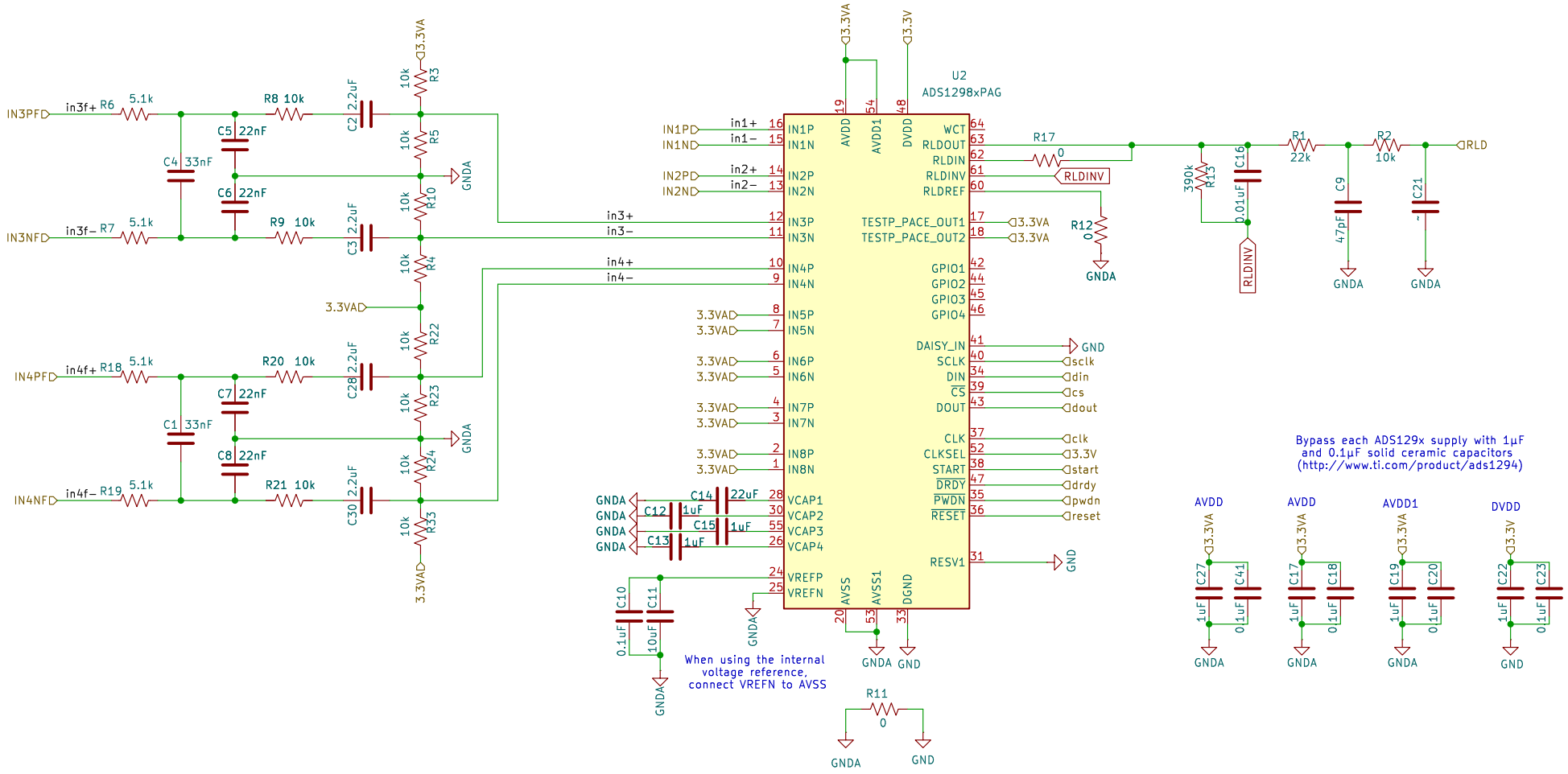

https://static.chipdip.ru/lib/687/DOC011687749.pdf
Analog filter
ADS1298RECG-FE
ECG Front-End
Performance Demonstration Kit

Connect unused pins to AVDD (Analog supply)
(http://www.ti.com/product/ads1294)

Sheet: /adc_8/
File: adc_8.kicad_sch

Title: 8 channel ADC

Size: A4	Date: 2024-10-17	Rev:
KiCad E.D.A. 9.0.5		Id: 2/4

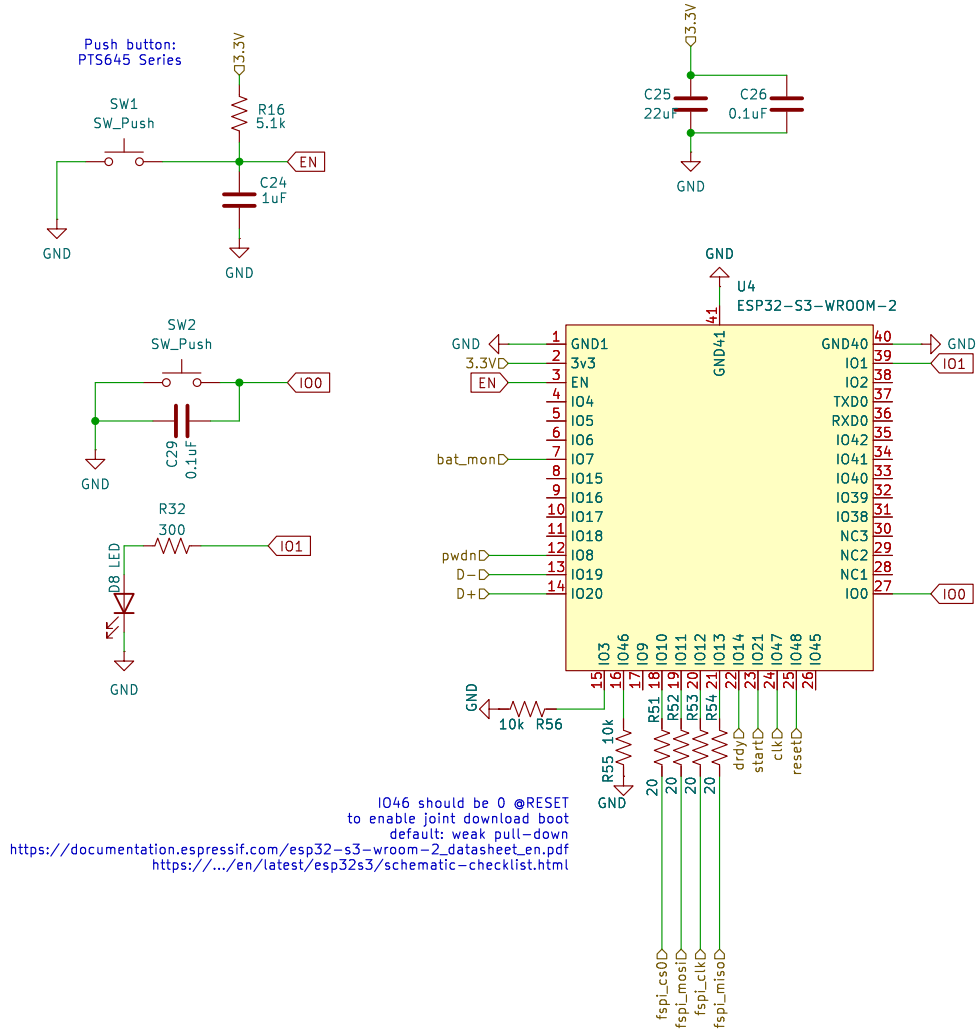

https://github.com/espressif/kicad-libraries

Interface 4c (see Table 2-4) is multiplexed with GPIO9 ~ GPIO14, RTC_GPIO9 ~ RTC_GPIO14, Touch Sensor interface, SAR ADC interface, and SPI interfaces 4d and 4g via IO MUX. It is the SPI2 main interface for fast SPI connection (ESP32-S3 Series Datasheet)

Technical Reference Chapter 30 SPI Controller

MIREA

Sheet: /cpu_wroom_esp32/
File: cpu_wroom_esp32.kicad_sch

Title: ESP32-S3 CPU

Size: A4	Date: 2025-10-10	Rev:
KiCad E.D.A. 9.0.5		Id: 3/4

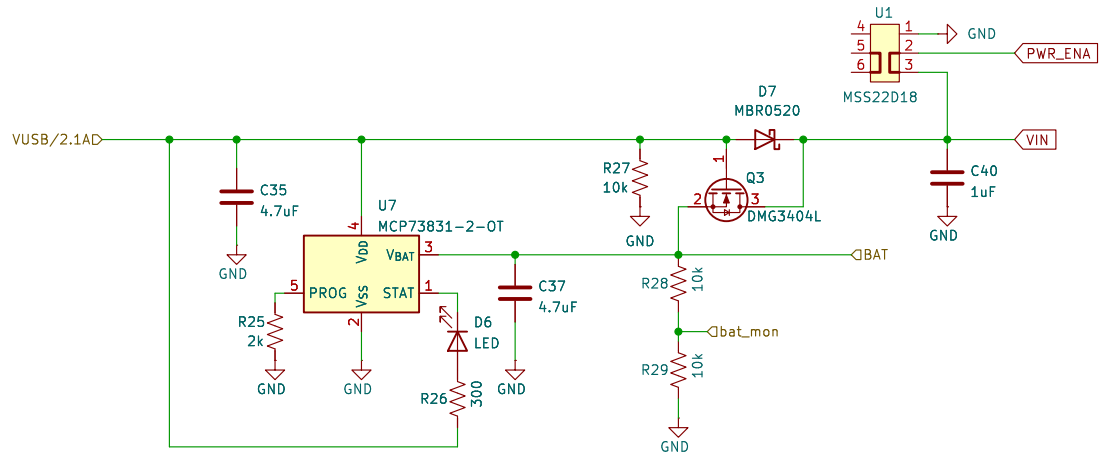

Fast charge current regulation can be scaled by placing
a programming resistor (RPROG) from the PROG input
to VSS. The program resistor and the charge current
are calculated using the following equation
(MCP73831/2: https://static.chipdip.ru/lib/283/DOC012283193.pdf)
$I_{REG}=1000V/R_{PROG}$

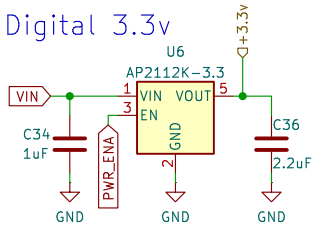

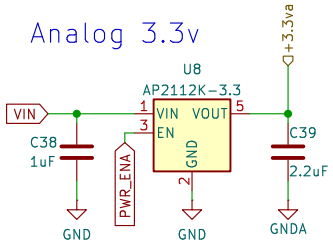

MIREA/Rf-lab.org

Sheet: /power_supply/
File: power_supply.kicad_sch

Title: Power supply

Size: A4	Date: 2024-10-17	**Rev: 1**
KiCad E.D.A. 9.0.5		Id: 5/4