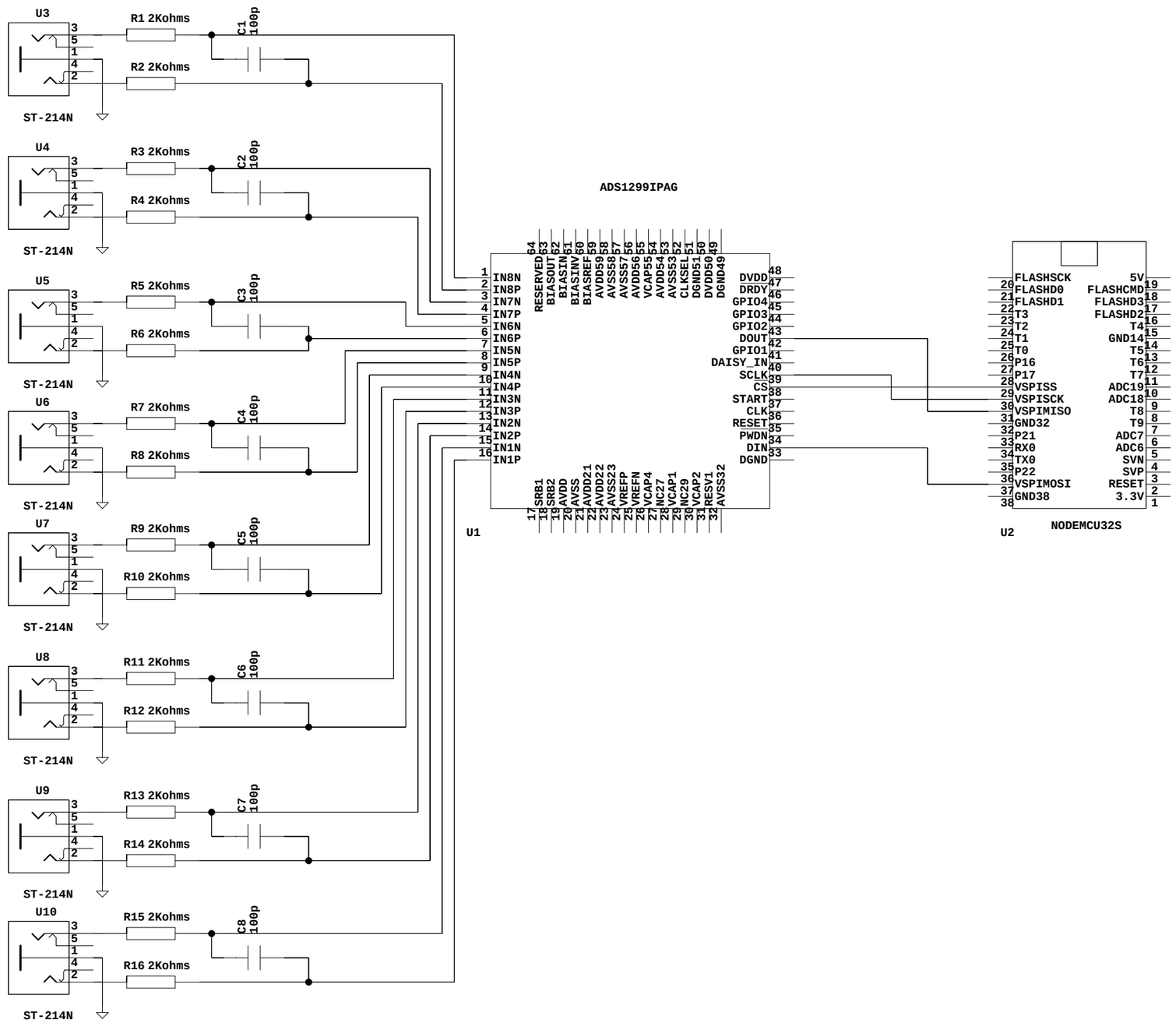

IKBSP KB-3 EMG 8x BOARD

TITLE

KB3_EMG_8x

SIZE	DWG NO	REV
A3		0

DRAWN BY	SCALE	SHEET	of	
IKBSP KB-3		1	1	01/03/2020:20:46