32X Main 1

File: 32X_main1.kicad_sch

32X Main 2

File: 32X_main2.kicad_sch

32X "VA2"

By RGBeter

Sheet: /

File: 32X_VA2.kicad_sch

Title: 32X MAIN "VA2"

Size: A3	Date: 2025-09-24	**Rev: 0.0**
KiCad E.D.A. 9.0.7		Id: 1/3

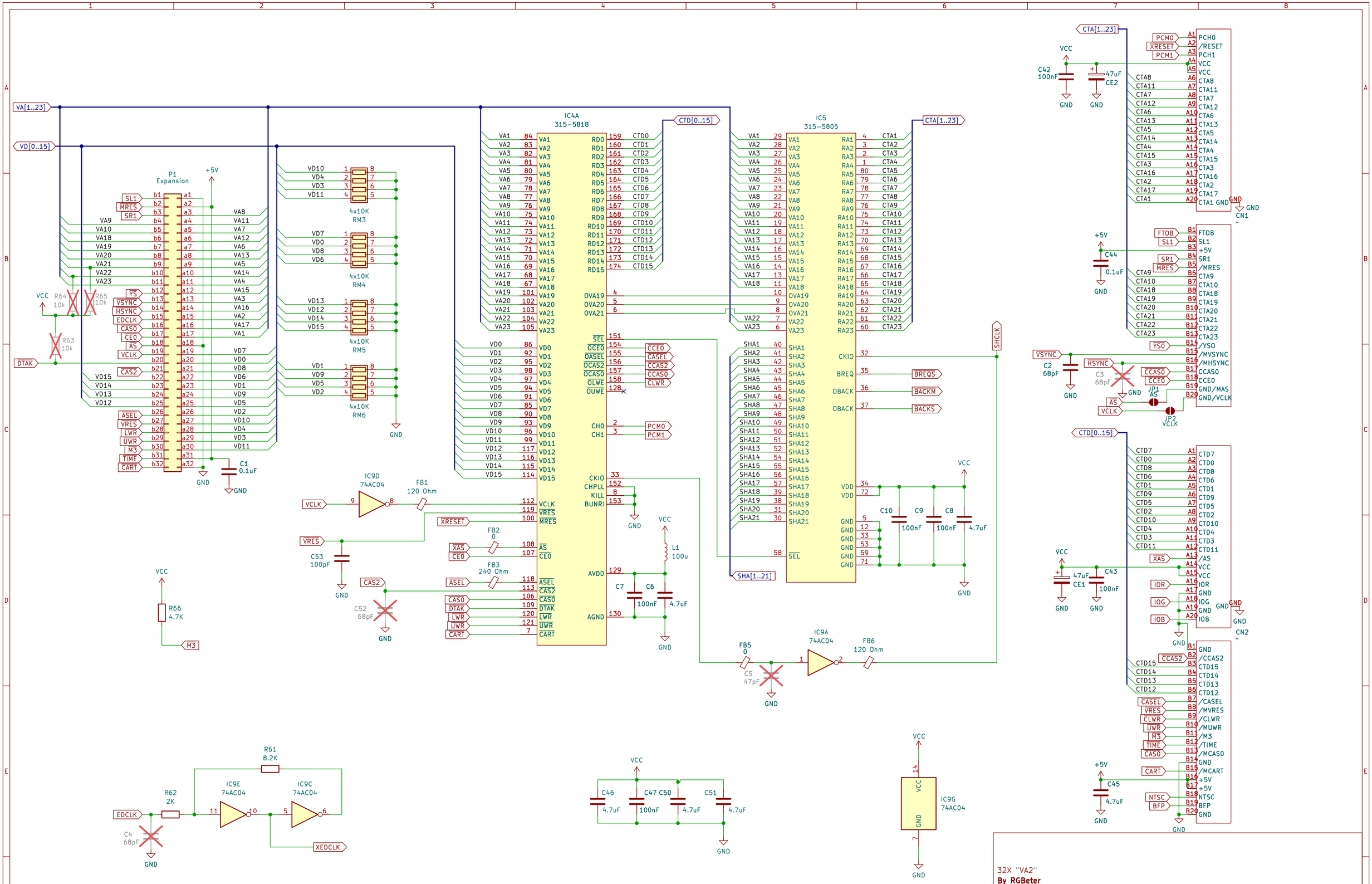

32X "VA2"

By RGBeter

Sheet: /32X Main 1/

File: 32X_main1.kicad_sch

Title: 32X MAIN "VA2"

Size: A3	Date: 2025-09-24	**Rev: 0.0**
KiCad E.D.A. 9.0.7		Id: 2/3

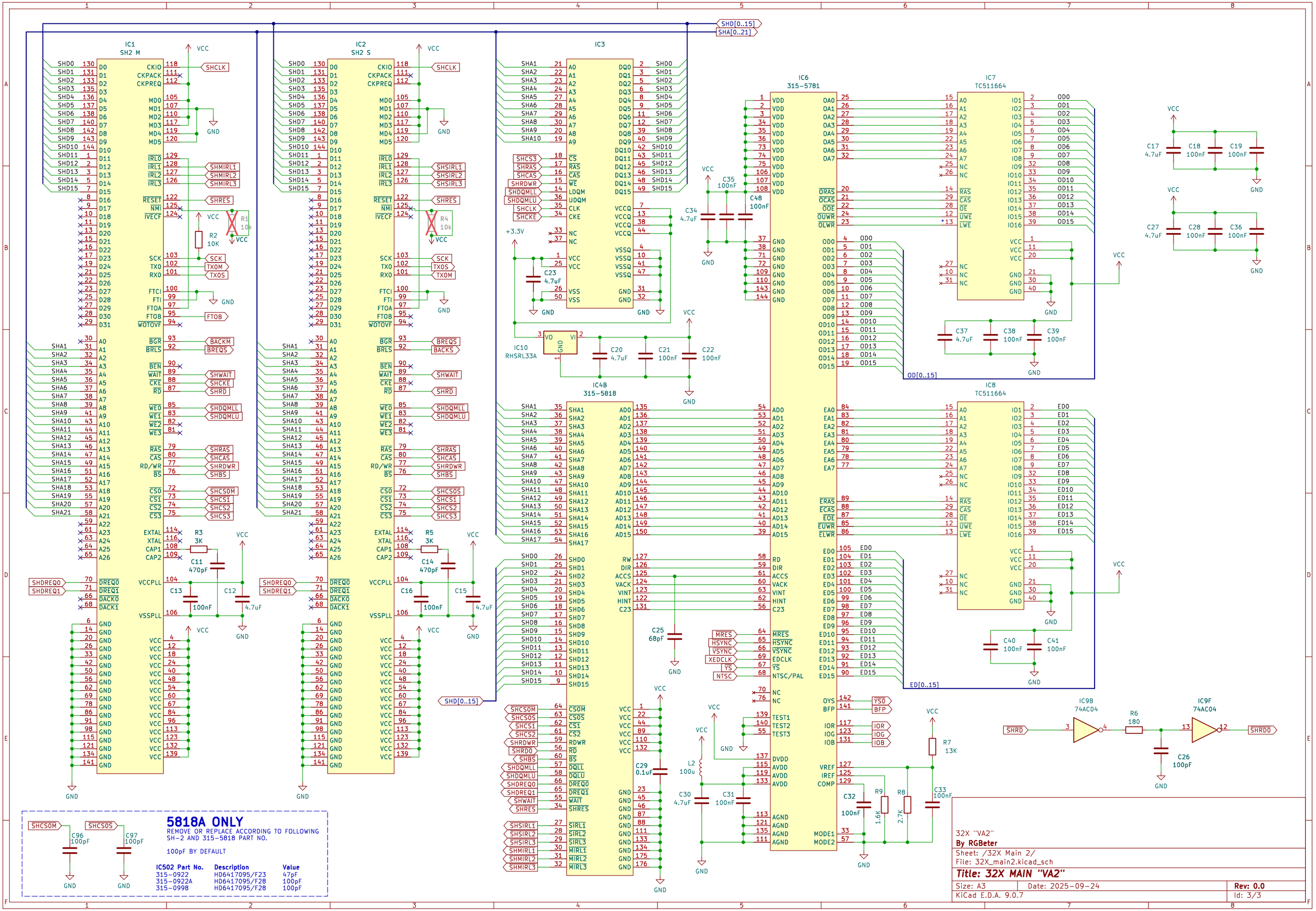
IC1
SH2 M
IC2
SH2 S
IC3
IC6
315-5781
IC7
TC511664
IC8
TC511664
IC4B
315-5818
IC10
RHSRL33A
IC9B
74AC04
IC9F
74AC04
SHD[0..15]
SHA[0..21]
OD[0..15]
ED[0..15]
VCC
GND
+3.3V
5818A ONLY
REMOVE OR REPLACE ACCORDING TO FOLLOWING SH-2 AND 315-5818 PART NO.
100pF BY DEFAULT
IC502 Part No. | Description | Value
315-0922 | HD6417095/F23 | 47pF
315-0922A | HD6417095/F28 | 100pF
315-0998 | HD6417095/F28 | 100pF
32X "VA2"
By RGBeter
Sheet: /32X Main 2/
File: 32X_main2.kicad_sch
Title: 32X MAIN "VA2"
Size: A3
Date: 2025-09-24
Rev: 0.0
KiCad E.D.A. 9.0.7
Id: 3/3