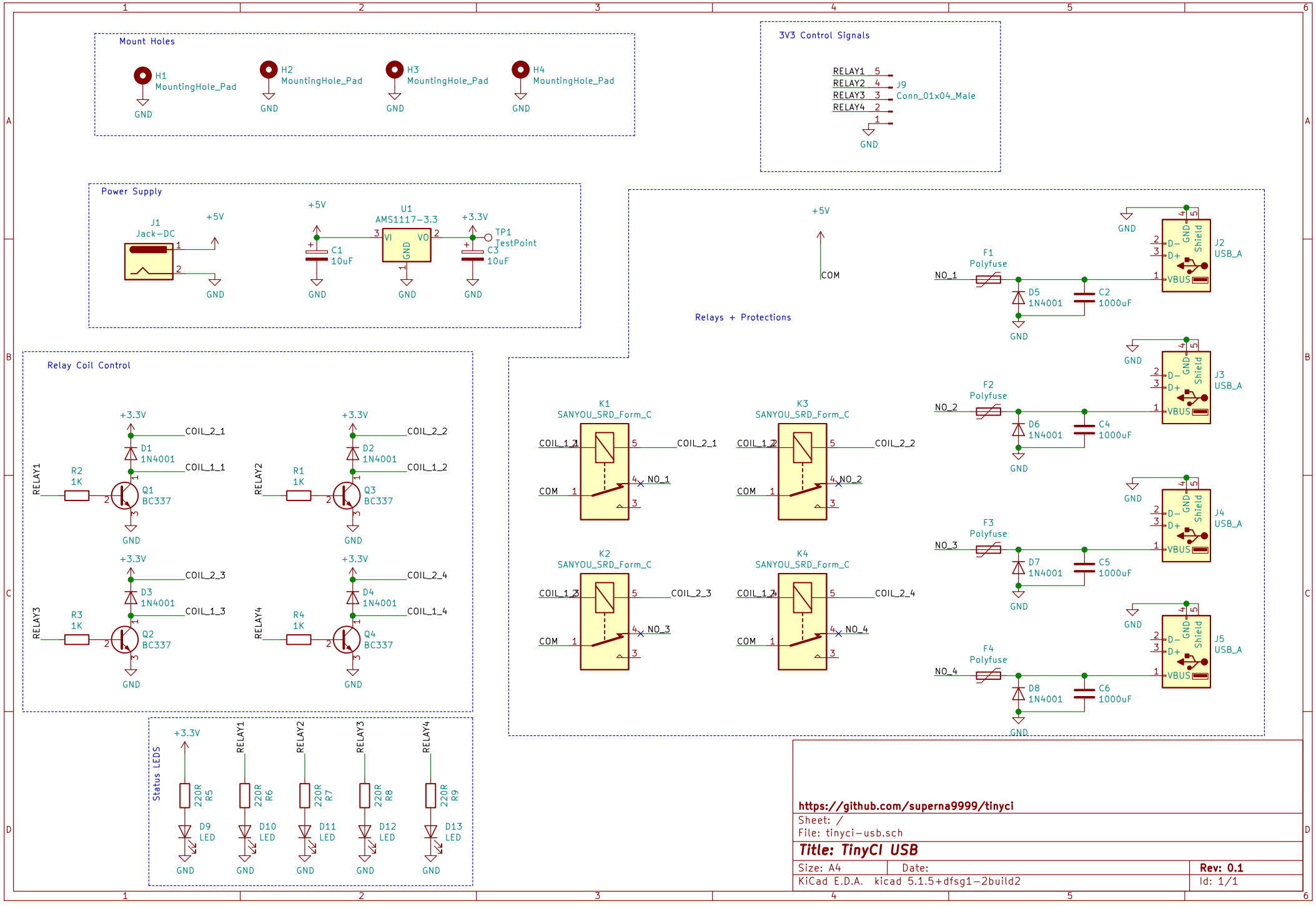

https://github.com/superna9999/tinyci

Sheet: /

File: tinyci-usb.sch

Title: TinyCI USB

Size: A4	Date:	Rev: 0.1
KiCad E.D.A. kicad 5.1.5+dfsg1-2build2		Id: 1/1