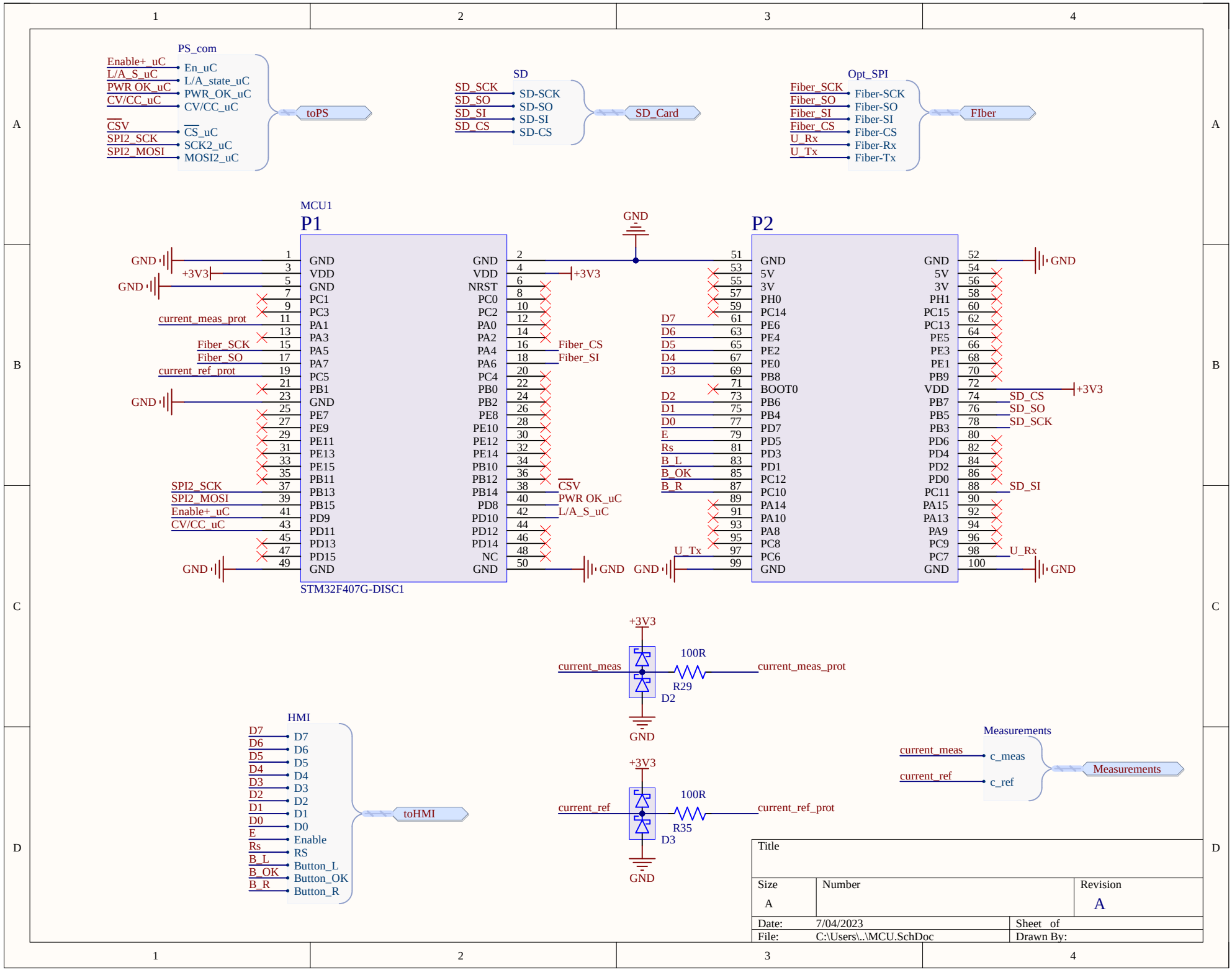
PS_com
Enable+_uC
L/A_S_uC
PWR OK_uC
CV/CC_uC
CSV
SPI2_SCK
SPI2_MOSI
En_uC
L/A_state_uC
PWR_OK_uC
CV/CC_uC
CS_uC
SCK2_uC
MOSI2_uC
toPS
SD
SD_SCK
SD_SO
SD_SI
SD_CS
SD-SCK
SD-SO
SD-SI
SD-CS
SD_Card
Opt_SPI
Fiber_SCK
Fiber_SO
Fiber_SI
Fiber_CS
U_Rx
U_Tx
Fiber-SCK
Fiber-SO
Fiber-SI
Fiber-CS
Fiber-Rx
Fiber-Tx
FIber
MCU1
P1
P2
STM32F407G-DISC1
GND
+3V3
current_meas_prot
current_ref_prot
Fiber_CS
Fiber_SI
SD_CS
SD_SO
SD_SCK
SD_SI
U_Rx
U_Tx
D7
D6
D5
D4
D3
D2
D1
D0
E
Rs
B_L
B_OK
B_R
current_meas
current_ref
100R
R29
D2
R35
D3
HMI
toHMI
Enable
RS
Button_L
Button_OK
Button_R
Measurements
c_meas
c_ref
Title
Size
A
Number
Revision
A
Date:
7/04/2023
Sheet of
File:
C:\Users\..\MCU.SchDoc
Drawn By:

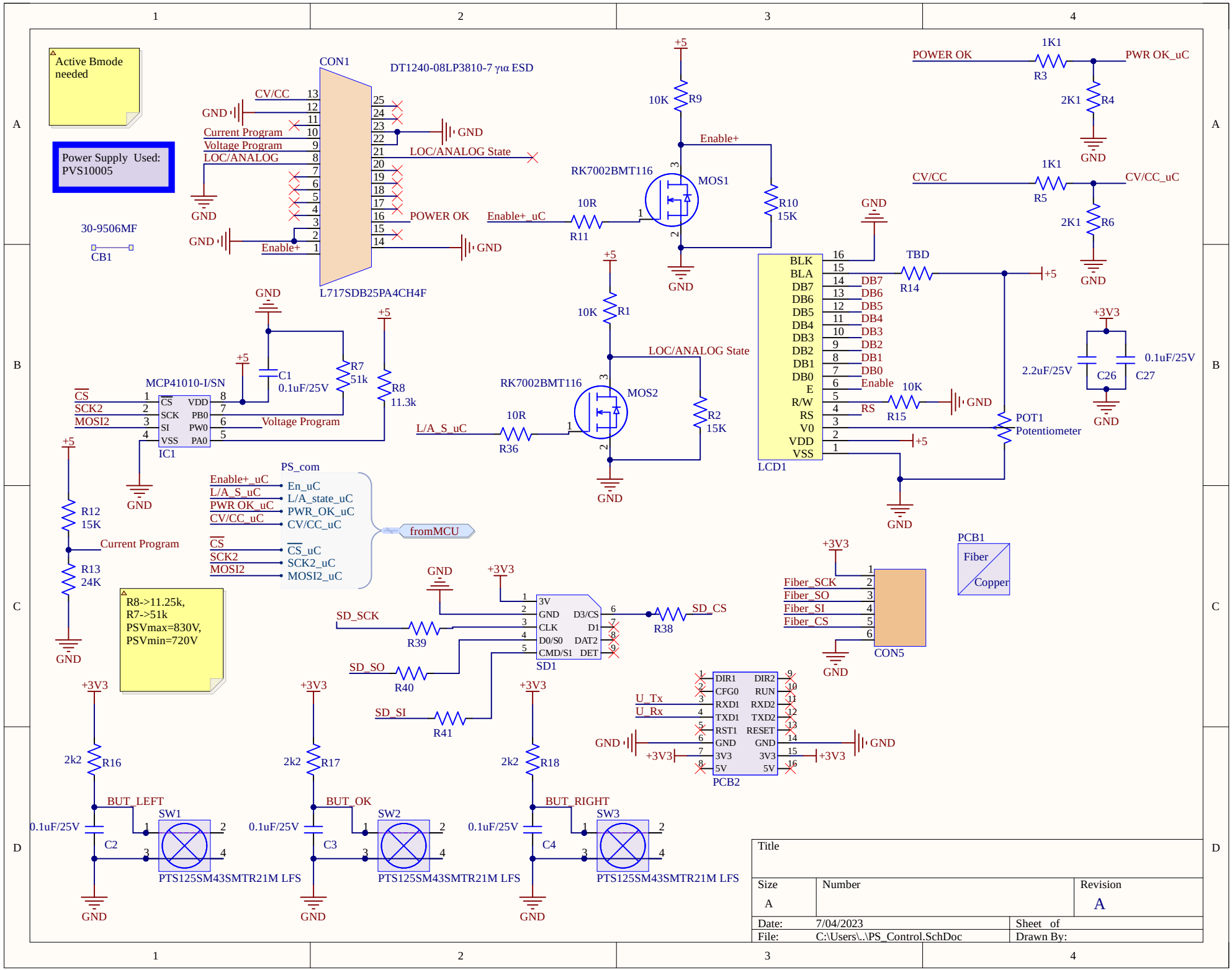
Active Bmode needed
Power Supply Used: PVS10005
CON1
DT1240-08LP3810-7 για ESD
L717SDB25PA4CH4F
CV/CC
Current Program
Voltage Program
LOC/ANALOG
LOC/ANALOG State
POWER OK
Enable+
Enable+_uC
30-9506MF
CB1
RK7002BMT116
MOS1
MOS2
R9 10K
R10 15K
R11 10R
R1 10K
R2 15K
R36 10R
L/A_S_uC
POWER OK
PWR OK_uC
R3 1K1
R4 2K1
CV/CC
CV/CC_uC
R5 1K1
R6 2K1
LCD1
BLK
BLA
DB7
DB6
DB5
DB4
DB3
DB2
DB1
DB0
E
R/W
RS
V0
VDD
VSS
Enable
R14 TBD
R15 10K
POT1
Potentiometer
C26 2.2uF/25V
C27 0.1uF/25V
MCP41010-I/SN
IC1
CS
SCK2
MOSI2
C1 0.1uF/25V
R7 51k
R8 11.3k
R12 15K
R13 24K
PS_com
Enable+_uC
L/A_S_uC
PWR OK_uC
CV/CC_uC
CS
SCK2
MOSI2
En_uC
L/A_state_uC
PWR_OK_uC
CV/CC_uC
CS_uC
SCK2_uC
MOSI2_uC
fromMCU
R8->11.25k,
R7->51k
PSVmax=830V,
PSVmin=720V
SD1
SD_SCK
SD_SO
SD_SI
SD_CS
R39
R40
R41
R38
CON5
Fiber_SCK
Fiber_SO
Fiber_SI
Fiber_CS
PCB1
Fiber
Copper
PCB2
U_Tx
U_Rx
DIR1
CFG0
RXD1
TXD1
RST1
GND
3V3
5V
DIR2
RUN
RXD2
TXD2
RESET
R16 2k2
R17 2k2
R18 2k2
BUT_LEFT
BUT_OK
BUT_RIGHT
SW1
SW2
SW3
C2 0.1uF/25V
C3 0.1uF/25V
C4 0.1uF/25V
PTS125SM43SMTR21M LFS
Title
Size A
Number
Revision A
Date: 7/04/2023
Sheet of
File: C:\Users\..\PS_Control.SchDoc
Drawn By:

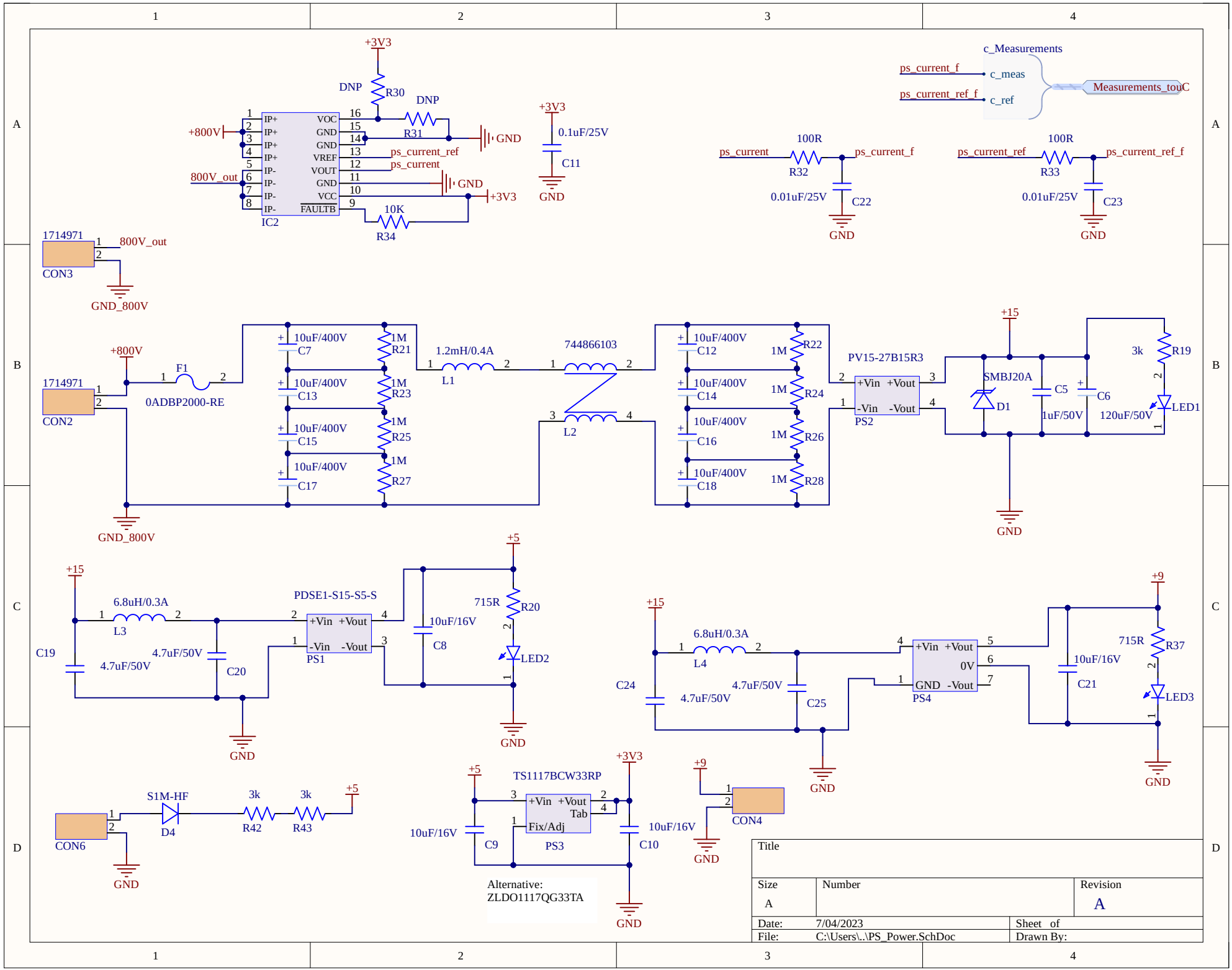
c_Measurements
ps_current_f
c_meas
ps_current_ref_f
c_ref
Measurements_touC
+3V3
DNP
R30
DNP
R31
+800V
800V_out
IP+
IP+
IP+
IP+
IP-
IP-
IP-
IP-
VOC
GND
GND
VREF
VOUT
GND
VCC
FAULTB
IC2
GND
ps_current_ref
ps_current
GND
+3V3
10K
R34
+3V3
0.1uF/25V
C11
GND
ps_current
100R
R32
ps_current_f
0.01uF/25V
C22
GND
ps_current_ref
100R
R33
ps_current_ref_f
0.01uF/25V
C23
GND
1714971
800V_out
CON3
GND_800V
+800V
F1
0ADBP2000-RE
1714971
CON2
GND_800V
10uF/400V
C7
1M
R21
10uF/400V
C13
1M
R23
10uF/400V
C15
1M
R25
10uF/400V
C17
1M
R27
1.2mH/0.4A
L1
744866103
L2
10uF/400V
C12
1M
R22
10uF/400V
C14
1M
R24
10uF/400V
C16
1M
R26
10uF/400V
C18
1M
R28
PV15-27B15R3
+Vin
+Vout
-Vin
-Vout
PS2
+15
SMBJ20A
D1
C5
1uF/50V
C6
120uF/50V
3k
R19
LED1
GND
+15
6.8uH/0.3A
L3
C19
4.7uF/50V
4.7uF/50V
C20
PDSE1-S15-S5-S
+Vin
+Vout
-Vin
-Vout
PS1
10uF/16V
C8
+5
715R
R20
LED2
GND
+15
6.8uH/0.3A
L4
C24
4.7uF/50V
4.7uF/50V
C25
+Vin
+Vout
0V
GND
-Vout
PS4
10uF/16V
C21
+9
715R
R37
LED3
GND
CON6
S1M-HF
D4
3k
R42
3k
R43
+5
GND
+5
TS1117BCW33RP
+Vin
+Vout
Tab
Fix/Adj
PS3
10uF/16V
C9
+3V3
10uF/16V
C10
GND
Alternative:
ZLDO1117QG33TA
+9
CON4
GND
Title
Size
A
Number
Revision
A
Date:
7/04/2023
Sheet of
File:
C:\Users\..\PS_Power.SchDoc
Drawn By: