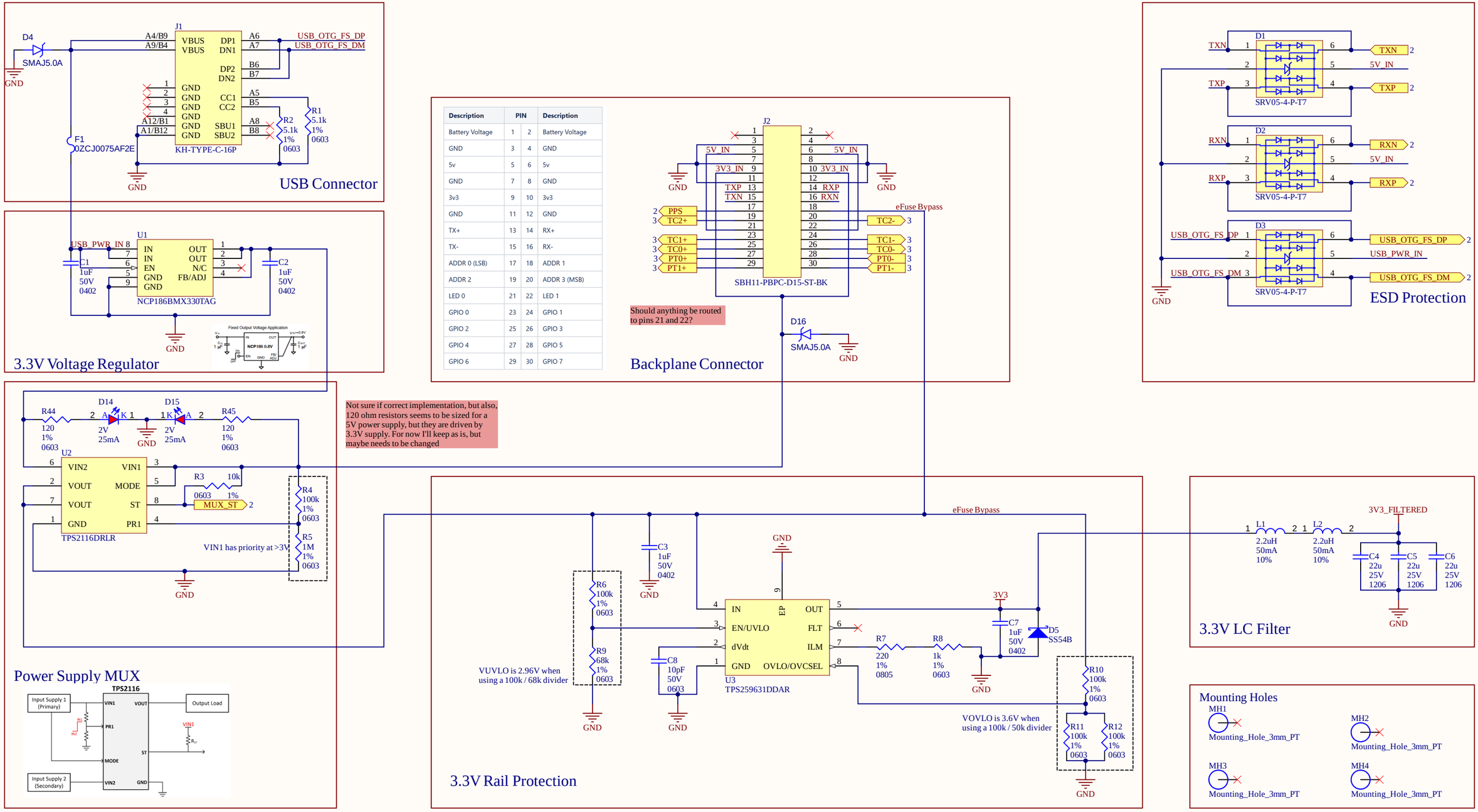

Description	PIN		Description
Battery Voltage	1	2	Battery Voltage
GND	3	4	GND
5v	5	6	5v
GND	7	8	GND
3v3	9	10	3v3
GND	11	12	GND
TX+	13	14	RX+
TX-	15	16	RX-
ADDR 0 (LSB)	17	18	ADDR 1
ADDR 2	19	20	ADDR 3 (MSB)
LED 0	21	22	LED 1
GPIO 0	23	24	GPIO 1
GPIO 2	25	26	GPIO 3
GPIO 4	27	28	GPIO 5
GPIO 6	29	30	GPIO 7

SHEET NAME: Backplane_Interface.SchDoc	PROJECT: Liquids_Module_v1.0.PrjPcb
ENGINEER: *	DATE: 4/2/2026

RIT LAUNCH INITIATIVE

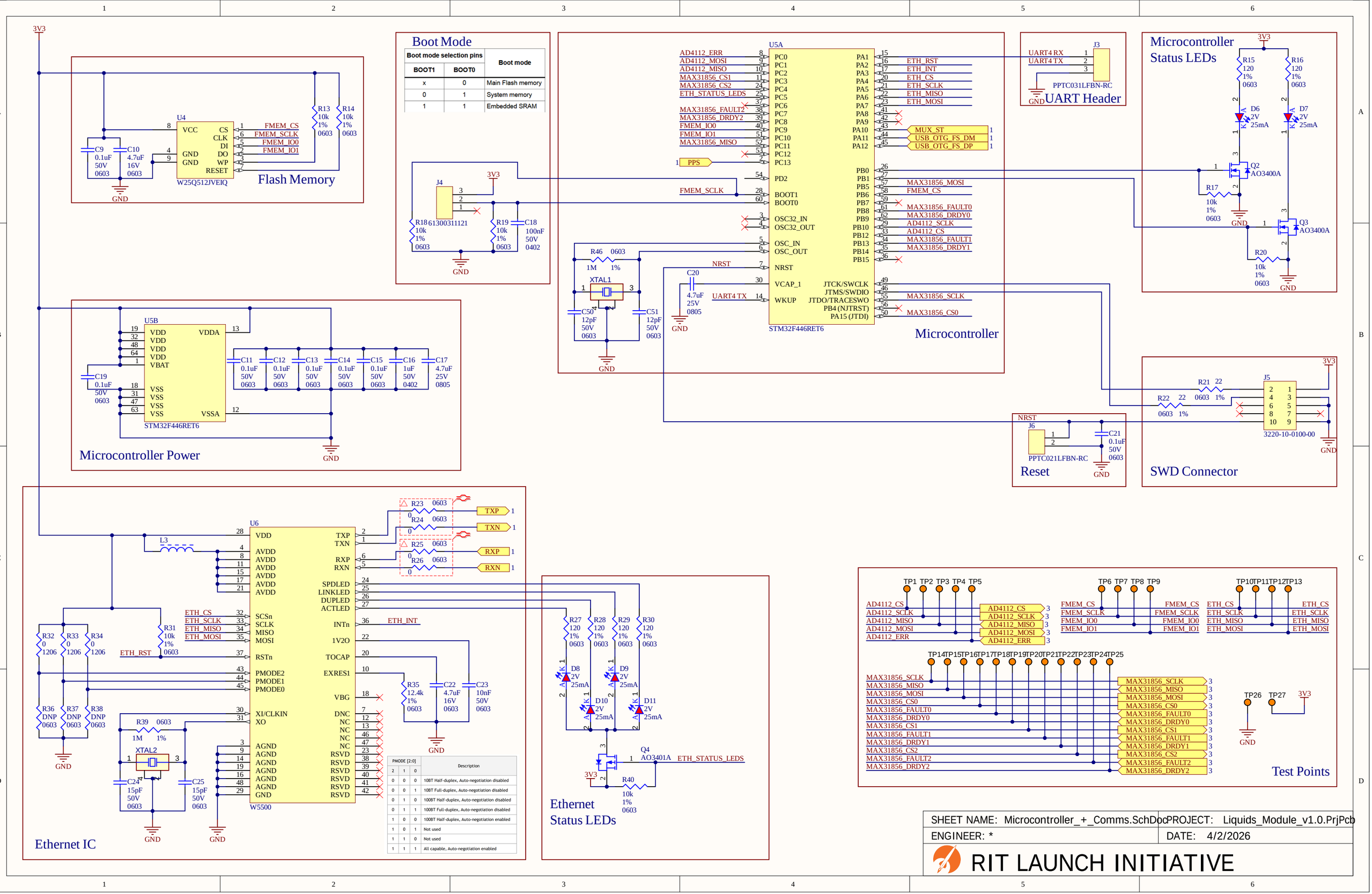
Flash Memory
U4
W25Q512JVEIQ
VCC
GND
CS
CLK
DI
DO
WP
RESET
FMEM_CS
FMEM_SCLK
FMEM_IO0
FMEM_IO1
C9 0.1uF 50V 0603
C10 4.7uF 16V 0603
R13 10k 1% 0603
R14 10k 1% 0603
Boot Mode
Boot mode selection pins
BOOT1
BOOT0
Boot mode
x 0 Main Flash memory
0 1 System memory
1 1 Embedded SRAM
J4
61300311121
R18 10k 1% 0603
R19 10k 1% 0603
C18 100nF 50V 0402
U5A
STM32F446RET6
Microcontroller
AD4112_ERR
AD4112_MOSI
AD4112_MISO
MAX31856_CS1
MAX31856_CS2
ETH_STATUS_LEDS
MAX31856_FAULT2
MAX31856_DRDY2
FMEM_IO0
FMEM_IO1
MAX31856_MISO
PPS
FMEM_SCLK
ETH_RST
ETH_INT
ETH_CS
ETH_SCLK
ETH_MISO
ETH_MOSI
MUX_ST
USB_OTG_FS_DM
USB_OTG_FS_DP
MAX31856_MOSI
FMEM_CS
MAX31856_FAULT0
MAX31856_DRDY0
AD4112_SCLK
AD4112_CS
MAX31856_FAULT1
MAX31856_DRDY1
MAX31856_SCLK
MAX31856_CS0
NRST
UART4 TX
UART4 RX
R46 1M 1% 0603
XTAL1
C50 12pF 50V 0603
C51 12pF 50V 0603
C20 4.7uF 25V 0805
J3
PPTC031LFBN-RC
UART Header
Microcontroller Status LEDs
R15 120 1% 0603
R16 120 1% 0603
D6 2V 25mA
D7 2V 25mA
Q2 AO3400A
Q3 AO3400A
R17 10k 1% 0603
R20 10k 1% 0603
Microcontroller Power
U5B
STM32F446RET6
VDD
VDDA
VBAT
VSS
VSSA
C19 0.1uF 50V 0603
C11 0.1uF 50V 0603
C12 0.1uF 50V 0603
C13 0.1uF 50V 0603
C14 0.1uF 50V 0603
C15 0.1uF 50V 0603
C16 1uF 50V 0402
C17 4.7uF 25V 0805
Reset
J6
PPTC021LFBN-RC
C21 0.1uF 50V 0603
SWD Connector
J5
3220-10-0100-00
R21 22 0603 1%
R22 22 0603 1%
Ethernet IC
U6
W5500
L3
R23 0603
R24 0603
R25 0603
R26 0603
TXP
TXN
RXP
RXN
SPDLED
LINKLED
DUPLED
ACTLED
INTn
1V2O
TOCAP
EXRES1
VBG
DNC
NC
RSVD
SCSn
SCLK
MISO
MOSI
RSTn
PMODE2
PMODE1
PMODE0
XI/CLKIN
XO
AGND
R31 10k 1% 0603
R32 0 1206
R33 0 1206
R34 0 1206
R36 DNP 0603
R37 DNP 0603
R38 DNP 0603
R39 0603 1M 1%
XTAL2
C24 15pF 50V 0603
C25 15pF 50V 0603
R35 12.4k 1% 0603
C22 4.7uF 16V 0603
C23 10nF 50V 0603
PMODE [2:0]
Description
2 1 0
0 0 0 10BT Half-duplex, Auto-negotiation disabled
0 0 1 10BT Full-duplex, Auto-negotiation disabled
0 1 0 100BT Half-duplex, Auto-negotiation disabled
0 1 1 100BT Full-duplex, Auto-negotiation disabled
1 0 0 100BT Half-duplex, Auto-negotiation enabled
1 0 1 Not used
1 1 0 Not used
1 1 1 All capable, Auto-negotiation enabled
Ethernet Status LEDs
R27 120 1% 0603
R28 120 1% 0603
R29 120 1% 0603
R30 120 1% 0603
D8 2V 25mA
D9 2V 25mA
D10 2V 25mA
D11 2V 25mA
Q4 AO3401A
R40 10k 1% 0603
Test Points
TP1 TP2 TP3 TP4 TP5
TP6 TP7 TP8 TP9
TP10 TP11 TP12 TP13
TP14 TP15 TP16 TP17 TP18 TP19 TP20 TP21 TP22 TP23 TP24 TP25
TP26 TP27
SHEET NAME: Microcontroller_+_Comms.SchDoc
PROJECT: Liquids_Module_v1.0.PrjPcb
ENGINEER: *
DATE: 4/2/2026
RIT LAUNCH INITIATIVE

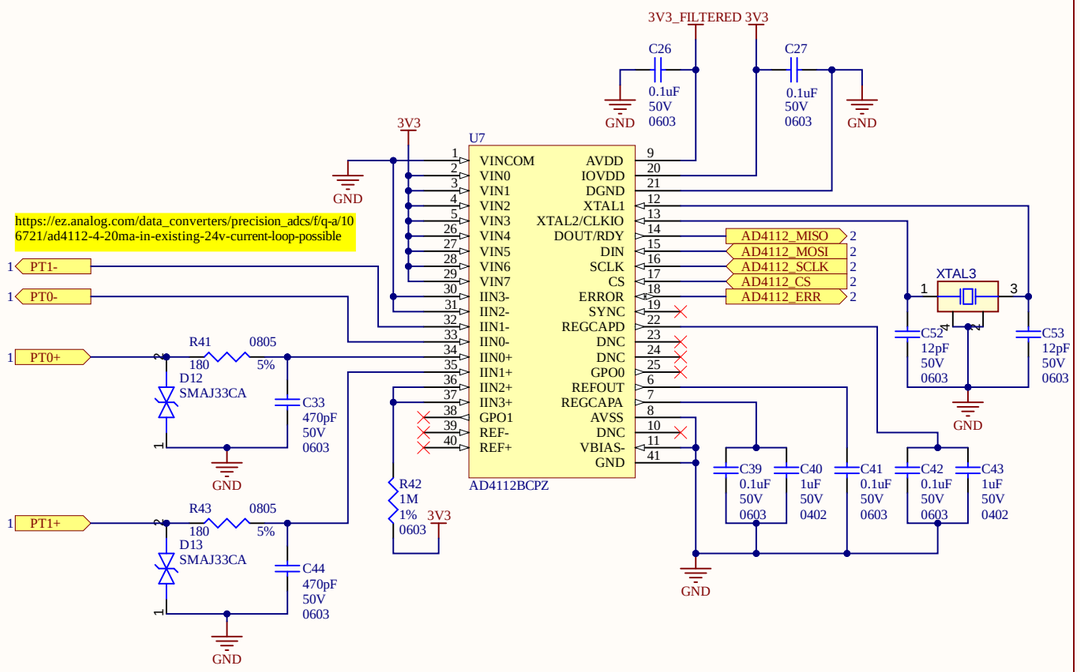

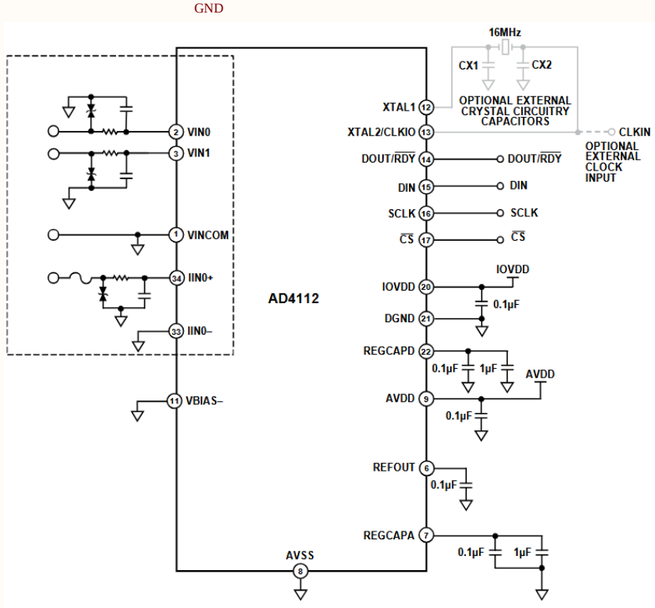

Figure 31. Typical Connection Diagram

Pressure Transducer ADC

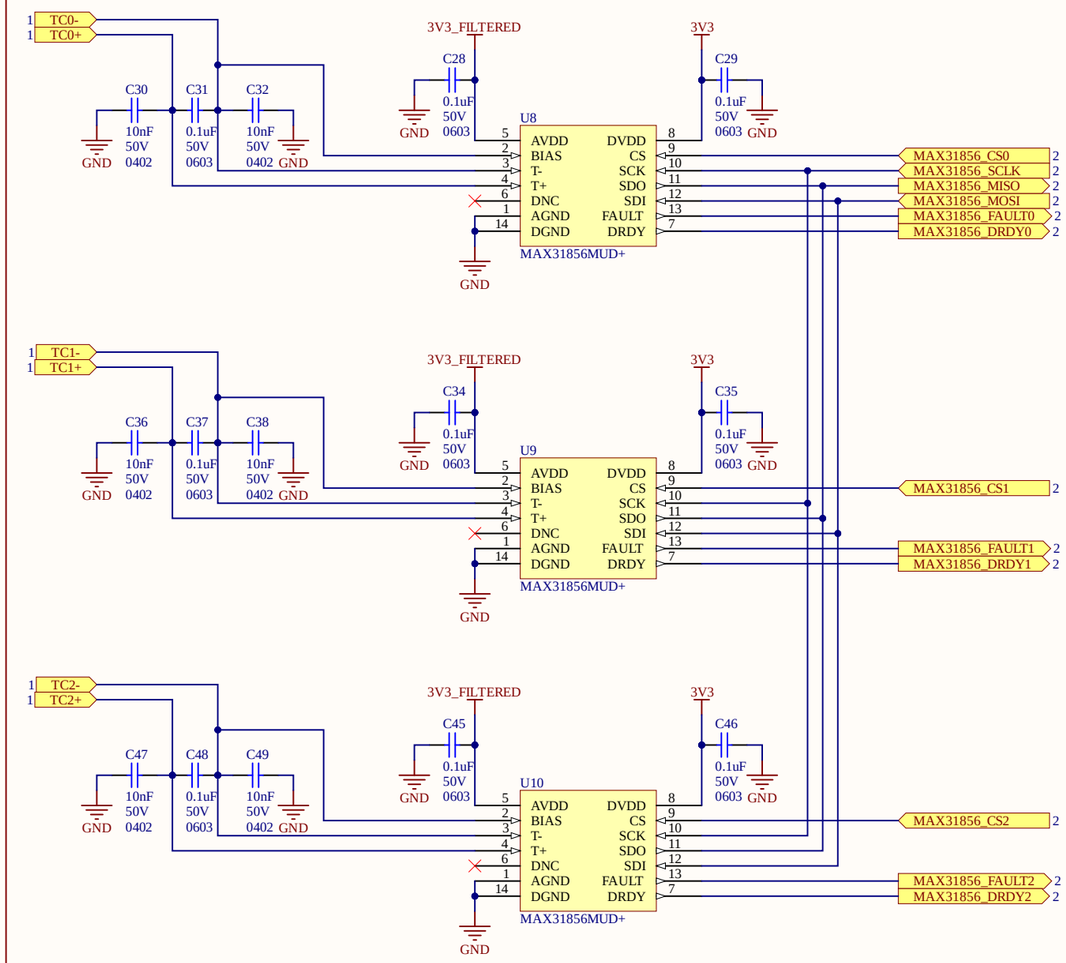

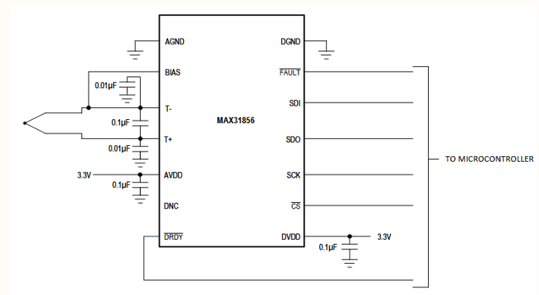

Thermocouple ADCs

SHEET NAME: ADCs.SchDoc	PROJECT: Liquids_Module_v1.0.PrjPcb
ENGINEER: *	DATE: 4/2/2026

RIT LAUNCH INITIATIVE